INCH-POUND

MIL-F-8789D
9 May 1994
SUPERSEDING
MIL-F-8789C
1 December 1981

MILITARY SPECIFICATION

FITTING END, ATTACHABLE HYDRAULIC HIGH-PRESSURE HOSE

This specification is approved for use by all Departments and Agencies of the Department of Defense.

1. SCOPE

1.1 Scope. This specification covers high-pressure hydraulic and pneumatic hose attachable fitting ends (see 6.1).

1.2 Classification. The attachable end fittings are of the types to be used with hose conforming to MIL-H-8788, for fabricating hose assemblies for use in hydraulic and pneumatic system flexible lines with operating pressures of 3,000 pounds per square inch (Psi) maximum and shall be of the sizes and types specified on MS 28760, MS 28761, MS 28780, and MS 28781 (see 6.2).

2. APPLICABLE DOCUMENTS

2.1 Government documents.

2.1.1 Specifications, and standards. The following specifications, and standards form a part of this document to the extent specified herein. Unless otherwise specified, the issues of these documents are those listed in the issue of the Department of Defense Index of Specifications and Standards (DODISS) and supplement thereto, cited in the solicitation (see 6.2).

SPECIFICATIONS

FEDERAL

QQ-A-225/6	Aluminum Alloy 2024 Bar, Rod and Wire, Rolled, Drawn, or Cold Finished
QQ-A-225/9	Aluminum Alloy 7075, Bar, Rod, Wire, and Special Shapes, Rolled, Drawn, or Cold Finished
QQ-A-367	Aluminum Alloy Forgings

MILITARY

MIL-H-775	Hose, Hose Assemblies, Rubber, Plastic, Fabric, or Metal (including Tubing) and Associated Hardware, Packaging of
MIL-F-5509	Fitting, Flared Tube, Fluid Connection

Beneficial comments (recommendations, additions, deletions) and any pertinent data which may be of use in improving this document should be addressed to: the Resources and Logistics Services Division, SA-ALC/TILDD, Bldg 171, Post C-12, 485 Quentin Roosevelt Rd., Kelly AFB, TX 78241-6425 by using the self-addressed Standardization Document Improvement Proposal (DD Form 1426) appearing at the end of this document or by letter.

AMSC N/A FSC 4730

DISTRIBUTION STATEMENT A. Approved for public release; distribution is unlimited.

Source: https://assist.dla.mil -- Downloaded: 2016-11-13T05:54Z
Check the source to verify that this is the current version before use.

MIL-H-5606	Hydraulic Fluid, Petroleum Base, Aircraft, Missile, and Ordnance
MIL-S-6049	Steel, Chrome-nickel-molybdenum (8740) Bars, Rods, and Forging Stock (Aircraft Quality)
MIL-S-6050	Steel, Chrome-nickel-molybdenum (8630) Bars and Reforging Stock (Aircraft Quality)
MIL-L-6082	Lubricating Oil, Aircraft Piston Engine (Non-Dispersant Mineral Oils)
MIL-S-6758	Steel, Chrome-molybdenum (4130) Bars and Reforging Stock (Aircraft Quality)
MIL-H-8788	Hose, Hydraulic, High Pressure
MIL-F-18280	Fittings, Flareless Tube, Fluid Connection
DOD-F-24669/6	Forgings and Forging Stock Bars and Billets Corrosion Resisting for Reforging (Metric)

STANDARDS

MILITARY

MIL-STD-105	Sampling Procedures and Tables for Inspection by Attributes
MIL-STD-129	Marking for Shipment and Storage
MIL-STD-453	Inspection, Radiographic
MS 28760	Fitting End, Attachable, Hydraulic and Pneumatic High Pressure Hose (3,000 Psi) Flared Tube
MS 28761	Fitting End, Attachable, Hydraulic High Pressure Hose (3,000 Psi), Flareless Tube
MS 28780	Elbow, 45 Deg Flared Tube to Hose, Attachable, Hydraulic (3,000 Psi)
MS 28781	Elbow, 90 Flared Tube to Hose, Attachable, Hydraulic (3,000 Psi)
MS 33514	Fitting End, Standard Dimensions for Flareless Tube Connection and Gasket Seal
MS 33656	Fitting End, Standard Dimensions for Flared Tube Connection and Gasket Seal

(Unless otherwise indicated, copies of the federal and military specifications and standards are available from the Defense Printing Service, Detachment Office, 700 Robbins Ave., Bldg 4D, Philadelphia, PA 19111-5094.)

2.2 Non-Government publications. The following document(s) form a part of this document to the extent specified herein. Unless otherwise specified, the issues of the documents which are DoD adopted are those listed in the issue of the DODISS cited in the solicitation. Unless otherwise specified, the issues of documents not listed in the DODISS are the issues of the documents cited in the solicitation.

NATIONAL AEROSPACE STANDARDS COMMITTEE

NAS 1760 Fitting End, Flareless Acorn, Standards Dimensions

(Application for copies should be addressed to the Aerospace Industries Association of America, Inc., 1250 Eye St, Washington, D.C. 20005.)

SOCIETY OF AUTOMOTIVE ENGINEERS, INC., (SAE)

ARP-603 Impulse Testing of Hydraulic Hose, Tubing and Fitting Assemblies

(Application for copies should be addressed to the Society of Automotive Engineers, 400 Commonwealth Drive, Warrendale, PA 15096.)

2.3 Order of precedence. In the event of a conflict between the text of

Source: https://assist.dla.mil -- Downloaded: 2016-11-13T05:54Z
Check the source to verify that this is the current version before use.

this document and the references cited herein (except for related associated detail specifications, specification sheets, or MS standards), the text of this document takes precedence. Nothing in this document, however, supersedes applicable laws and regulations unless a specific exemption has been obtained.

3. REQUIREMENTS

3.1 Qualification. Items furnished under this specification shall be products which are qualified for listing on the applicable qualified products list at the time set for opening of bids (see 4.4 and 6.3).

3.2 Data. Unless otherwise specified in the contract or order, no data (other than reports and drawings accompanying qualification samples) are required by this specification or any of the documents referenced in section 2 herein (see 6.2).

3.3 General provisions.

3.3.1 Fittings shall be suitable for use with hose conforming to MIL-H-8788 to form flexible assemblies for use in hydraulic systems with operating pressure of 3,000 psi maximum.

3.3.2 Fittings shall conform to the applicable requirements of MIL-F-5509 for flared fittings or MIL-F-18280 for flareless fittings. When the requirements of MIL-F-5509 or MIL-F-18280 and this specification conflict, this specification shall govern.

3.3.3 Material certification. Certificates showing conformance with the applicable material specification shall be available to the procuring activity.

3.4 Material. Hose and end fitting components shall conform to one of the following materials:

a. Nipples and nuts, steel:

MIL-S-6758
MIL-S-6050
MIL-S-6049

b. Bodies, aluminum:

QQ-A-225/6 Temper T6 or T851
QQ-A-225/9 Temper T73
QQ-A-367 (7049) Temper T73, T6 or T851

c. Lock rings (when used), steel:

DOD-F-24669/6 (303) S30300

3.4.1 Design and construction. The design and dimensions shall fall within the envelope limits shown on MS 28760, MS 28761, MS 28780, and MS 28781.

3.4.2 Finish. End fittings shall be finished in accordance with the applicable standards and drawings listed in MIL-F-5509 and MIL-F-18280.

3.4.3 Brazing. Fittings requiring brazing operations shall be brazed as specified on the applicable MS drawing. The requirements of paragraphs titled "Detailed Data" and "Retention of Radiographs" of MIL-STD-453 shall not apply to brazed steel parts.

3.5 Performance. When assembled with the specified hose, fittings shall

Source: https://assist.dla.mil -- Downloaded: 2016-11-13T05:54Z
Check the source to verify that this is the current version before use.

satisfy the performance requirements specified in section 4 when subjected to the following tests:

a. Proof pressure ..... (4.7.1)

b. Leakage ..... (4.7.2)

c. Burst pressure ..... (4.7.3)

d. Coupling ..... (4.7.4)

e. Hydraulic fluid impulse . (4.7.5)

f. Over tightening torque ... (4.7.6)

g. Cold temperature ..... (4.7.7)

3.6 Identification of product.

3.6.1 Each end fitting assembly shall be identified as specified on the applicable MS standard.

3.6.1.1 Swivel nuts and fitting nipples shall be color marked in accordance with MIL-F-5509 for flared fittings and MIL-F-18280 for flareless fittings.

3.6.2 Use of MS or MIL designations. MS or MIL designations shall not be applied to a product, except for qualification test samples, nor referred to in correspondence or sales matter until notification has been received from the activity responsible for qualification that the product has been granted qualification approval.

3.7 Workmanship. Workmanship shall conform to MIL-F-5509 for flared fittings and MIL-F-18280 for flareless fittings.

4. QUALITY ASSURANCE PROVISIONS

4.1 Responsibility for inspection. Unless otherwise specified in the contract, the contractor is responsible for the performance of all inspection requirements as specified herein. Except as otherwise specified in the contract or purchase order, the contractor may use his own or any other facilities suitable for the performance of the inspection requirements specified herein, unless disapproved by the Government. The Government reserves the right to perform any of the inspections set forth in the specification where such inspections are deemed necessary to assure supplies and services conform to prescribed requirements.

4.1.1 Responsibility for compliance. All items shall meet all requirements of section 3 and 5. The inspection set forth in this specification shall become part of the contractor's overall inspection system or quality program. The absence of any inspection requirements in the specification shall not relieve the contractor of the responsibility of ensuring that all products or supplies submitted to the Government for acceptance comply with all requirements of the contract. Sampling inspection, as part of manufacturing operations, is an acceptable practice to ascertain conformance to requirements, however, this does not authorize submission of known defective material, either indicated or actual, nor does it commit the Government to accept defective material.

4.2 Lot. A lot shall consist of all hose end fittings of one type and size made from the same batch of material and submitted for inspection at the same time and place.

Source: https://assist.dla.mil -- Downloaded: 2016-11-13T05:54Z
Check the source to verify that this is the current version before use.

4.3 Classification of inspections. The inspection and testing of hose end fittings shall be classified as follows:

a. Qualification inspections ..... (4.4)

b. Quality conformance inspection ..... (4.5)

4.4 Qualification inspection.

4.4.1 Test samples. Qualification test samples shall consist of sufficient hose end fittings to permit fabrication to 10 assemblies of each size from each manufacturer's hose qualified in accordance with MIL-H-8788. Samples shall be identified as required, and forwarded to the activity responsible for qualification, designated in the letter of authorization from that activity.

4.4.2 Tests. Qualification tests of fittings shall consist of all the tests of this specification. The qualification tests shall be made on each size of fitting with all makes of hose conforming to MIL-H-8788 and of the same size as listed in QPL 8788.

4.5 Quality conformance inspection. The quality conformance inspection shall consist of examinations (4.5.1) and sampling tests (4.5.2).

4.5.1 Examinations.

4.5.1.1 Examination of product. All hose and fittings shall be visually examined to determine conformance with this inspection with respect to workmanship, marking and finish.

4.5.1.2 Examination of preparation for delivery. Preparation for delivery shall be examined for conformance to section 5.

4.5.2 Sampling tests. A sample shall be selected from each lot in accordance with MIL-STD-105, inspection level I, with a minimum sample of 10 fitting ends for the following tests. Samples shall conform to the requirements specified for examination of product (4.5.1.1) and shall conform to the dimensions and tolerances specified on the applicable MS standards and to the manufacturer's detail drawings of the design upon which qualification test approval was based.

a. Coupling ..... (4.7.4)

b. Proof pressure ..... (4.7.1)

c. Leakage ..... (4.7.2)

d. Over tightening torque .. (4.7.6)

e. Cold temperature ..... (4.7.7)

4.5.3 Rejection and retest. The failure of any sample to conform to the tests specified in 4.5.2 shall be cause for rejection of the lot. Once a lot (or part of a lot) has been rejected by the procuring activity (Government or commercial) before it can be resubmitted for tests, full particulars concerning the causes of previous rejection and the action taken to correct the defects in the lot shall be furnished (in writing) by the contractor.

4.6 Test conditions.

4.6.1 Preparation of specimens. Test samples shall be assembled with samples of all hose of applicable size conforming to MIL-H-8788, and each test shall be conducted on assemblies fabricated from each type of approved hose.

Source: https://assist.dla.mil -- Downloaded: 2016-11-13T05:54Z
Check the source to verify that this is the current version before use.

For qualification tests, sufficient hose end fittings shall be supplied to the activity responsible for qualification to permit the fabrication of 10 assemblies of each size from each manufacturer's hose qualified in accordance with MIL-H-8788. Lengths shall be as shown in table I.

Table I. Performance characteristics.

Hose Size No.	Proof pressure psi (min)	Burst pressure psi (min)	Operating pressure psi	Bend radius inside inch (min)	Free length of hose between fittings
-4	8,000	16,000	3,000	3.00	12.00
-5	7,000	14,000	3,000	3.375	13.5
-6	7,000	14,000	3,000	5.00	19.00
-8	7,000	14,000	3,000	5.75	21.5
-10	6,000	12,000	3,000	6.5	25.00
-12	6,000	12,000	3,000	7.75	29.00
-16	5,000	10,000	3,000	9.625	16.00

4.6.2 Oil aging. In all oil aging tests in which hydraulic fluid conforming to MIL-H-5606 is specified, the fluid and hose samples shall be put into a non-pressurized closed-type container or a reflux-type condenser to prevent distillation of the volatile matter in the fluid. A batch of fluid shall not be used for more than 10 aging tests. In each case, the volume of fluid used shall be sufficient to completely cover the hose. The hose shall be immersed in hydraulic fluid 7 days at a temperature of 158° ±2°F. All air must be excluded from the bore of the tube during this aging process. Oil-aged specimens shall be used in conducting the applicable tests, 4.7.1, 4.7.4 4.7.5 and 4.7.7.

4.6.3 Air aging. Air aged samples shall be kept in air at a temperature of 158° ±2°F for 7 days.

4.6.4 Test fluid. Unless otherwise specified, the test fluid shall be lubricating oil conforming to MIL-L-6082, Grade 1100, or hydraulic fluid conforming to MIL-H-5606.

4.7 Test methods.

4.7.1 Proof pressure. All assemblies shall be subjected to the hydraulic proof pressure specified in table I for a period of not less than 30 seconds nor more than 5 minutes, and there shall be no leakage or damage to the hose or end fittings. The air and oil aged samples prepared for the test specified in 4.7.5 shall be subjected to the hydraulic proof pressure test before and after aging.

4.7.2 Leakage. Two unaged assemblies shall be subjected to 70 percent of the hydraulic burst pressure specified in table I for 5 minutes. Test fluid shall be water or hydraulic fluid conforming to MIL-H-5606. The pressure shall then be reduced to zero, after which it shall be raised to 70 percent of the specified burst pressure for a final 5 minute check. The fitting ends shall be carefully checked during this period, and there shall be no evidence of leakage through the fittings, no fitting movement, or other fitting malfunction. After completion of the test on these samples, they shall be subjected to the test specified in 4.7.3 and these pressures recorded.

4.7.3 Burst pressure. Two unaged assemblies shall be subjected to the hydraulic burst pressure specified in table I within 24 hours after assembly of the end fittings to the hose. Test fluid shall be water or hydraulic fluid conforming to MIL-H-5606. The end fittings shall not leak, burst, loosen, or blow off the hose at any pressure less than the burst pressure of table I. The pressure shall be applied at the rate of 25,000 +0/-10,000 psi per minute

Source: https://assist.dla.mil -- Downloaded: 2016-11-13T05:54Z
Check the source to verify that this is the current version before use.

until the burst pressure is reached. During this test, one end of the test assembly shall be free.

4.7.4 Coupling. All samples prepared for tests specified in 4.7.5 shall be checked for bulging of inner tube and reduction of fitting nipple ID caused by the attachment of the end fitting. The measurement shall be taken on aged assemblies with a ball-end-type gage. The diameter of the ball shall be 0.001 +0, -0.001 inch under minimum bulge diameter specified in figure 1 and table II. The weight of such gage in ounces shall be equal to the dash number of the size hose for which designed. In taking the measurement, the gage shall be placed inside the end of the hose assembly at bulge gage inspection point shown on figure 1, table II without lubrication and without pushing it through. The gage shall fall through the section at the end of the fitting insert in the hose under its own weight.

TABLE II. Fitting size.

Fitting Size	A Dia (Min)	B 1/ Dia (Min)
-4	.146	.146
-5	.177	.177
-6	.271	.271
-8	.365	.365
-10	.455	.455
-12	.568	.568
-16	.778	.778

1/ B Dia indicates both the min permissible bulge diameter of the inner tube and the minimum nipple ID of the fitting, when the fitting is assemble with the hose.

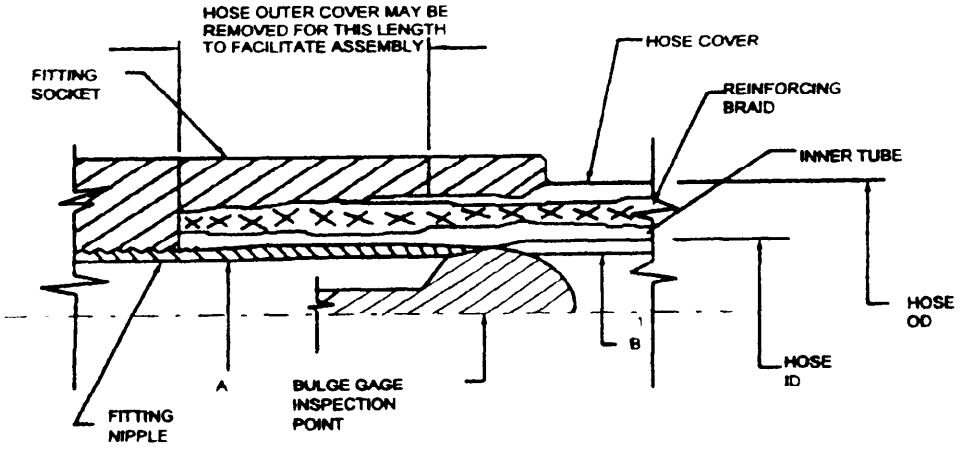

FIGURE 1. Minimum bulge of hose inner tube when fittings are assembled with hose conforming to MIL-H-8788.

NOTES:

1. B DIA INDICATES BOTH THE MIN PERMISSIBLE BULGE DIAMETER OF THE INNER TUBE AND THE MINIMUM NIPPLE ID OF THE FITTING, WHEN THE FITTING IS ASSEMBLED WITH THE HOSE.

Source: https://assist.dla.mil -- Downloaded: 2016-11-13T05:54Z
Check the source to verify that this is the current version before use.

4.7.5 Hydraulic fluid impulse. For qualification tests, four hose assemblies of lengths specified in table I shall be subjected to the impulse cycles specified in table III. Two of these samples shall be air aged and two shall be oil aged. All assemblies shall be subjected to the applicable proof pressure specified in table I prior to impulsing. These assemblies shall be connected to manifolds installed in a testing machine which will produce dynamic pressure impulses in the inlet manifold of the magnitudes, frequency, and number of cycles per ARP-603 and table III. Electronic measuring devices shall be used to measure and indicate the impulse pressures. When under impulse, the hose shall be bent to a "U" shape with a bend radius as specified in table I, and both ends connected to a rigid support with the exception of the -16 size which shall be tested without surge peaks in a straight position with one end free. The test fluid shall conform to MIL-H-5606, except that up to 25 percent of oil conforming to MIL-L-6082 may be added to the test fluid, and shall be held at a temperature of 120° ± 20°F measured in the manifold. Leakage, burst, or coupling blowoff shall be evident of failure. The minimum impulse cycles shall be as specified in table III.

Table III. Impulse cycles.

Size	Minimum impulse cycles	Minimum average impulse cycles 1/	Minimum impulse cycles that can be used to compute average 2/
4----	100,000	------	-------
5----	100,000	------	-------
6----	100,000	------	-------
8----	75,000	100,000	150,000
10----	50,000	75,000	100,000
12----	35,000	50,000	70,000
16----	45,000	55,000	75,000

1/ Average of four test assemblies.
2/ When test assemblies impulse cycles are averaged, the maximum cycles that can be used to compute the average shall not exceed the figures given in this column.

4.7.6 Over tightening torque. The flared type and fittings of an assembly shall be subjected to the following test by assembling on a fitting end of steel construction in accordance with MS 33656. The fitting shall be lubricated with oil conforming to MIL-L-6082, or hydraulic fluid conforming to MIL-H-5606 prior to this test. The fitting shall be tightened to the appropriate over tightening-torque value listed in table IV for each size and loosened. This sequence shall be repeated 15 times. After this sequence, there shall be no evidence of failure or deformation of the fitting assembly, and the swivel nut shall be free enough to permit turning on the nipple by hand. Over tightening torque shall also be applied to an assembly having the flareless type end fitting by assembling on a fitting end of steel construction in accordance with MS 33514 or NAS 1760. Lubrication test sequence and conditions for the flareless fittings are the same as mentioned above for the flared-type fittings. Over tightening torque of the flareless fitting will be accomplished by first tightening the nut, finger tight, to the fitting and then turning the nut an additional one-half turn.

Source: https://assist.dla.mil -- Downloaded: 2016-11-13T05:54Z
Check the source to verify that this is the current version before use.

TABLE IV. Over tightening torque.

Size	Over tightening Torque (in-lb)
-4	160
-5	240
-6	300
-8	560
-10	700
-12	1,000
-16	1,550

4.7.7 Cold temperature. Two assemblies of adequate lengths shall be used. One assembly shall be oil-aged and the other shall be unaged. Both samples shall be filled with hydraulic fluid conforming to MIL-H-5606 and shall be placed in a cold chamber, the temperature of which can be controlled within -65° ±2°F and allowed to remain for 24 hours. The assembly shall be proof tested after removal from the cold chamber, and any leakage at the end fitting shall be evidence of failure of the end fitting. The -16 size may be tested at -40°F in lieu of -65°F.

5. PACKAGING

5.1 Preservation.

5.1.1 Preservation shall be level A or C as specified (6.2), in accordance with MIL-H-775.

5.2 Packing.

5.2.1 Packing shall be level A, B, or C as specified (6.2) in accordance with MIL-H-775.

5.3 Marking.

5.3.1 Marking of shipments. Interior packages and exterior shipping containers shall be marked in accordance with MIL-STD-129.

6. NOTES

(This section contains information of a general or explanatory nature that may be helpful, but is not mandatory.)

6.1 Intended use. The fitting ends covered by this specification are intended for use on hose conforming to MIL-H-8788 to fabricate flexible hose assemblies for use on hydraulic flexible lines. Fittings covered by this specification may be procured by the Government for fabrication of high-pressure hose assemblies. These fittings are not intended to be reused.

6.2 Acquisition requirements. Procurement documents should specify the following:

a. Title, number, and date of this specification.

b. Sizes (see 1.2).

c. Issue of DODISS to be cited in the solicitation and if required, the specific issue of individual documents referenced (see 2.1.1 and 2.2).

Source: https://assist.dla.mil -- Downloaded: 2016-11-13T05:54Z
Check the source to verify that this is the current version before use.

d. Data requirements (see 3.2).

e. Levels of preservation, packaging, and packing (see 5.1 and 5.2).

6.3 Qualification. With respect to products requiring qualification, awards will be made only for products which are at the time set for opening of bids, qualified for inclusion in the applicable Qualified Products List whether or not such products have actually been so listed by that date. The attention of the contractor is called to this requirement and manufacturers are urged to arrange to have the products that they propose to offer to the federal government tested for qualification in order that they may be eligible to be awarded contracts or orders for the products covered by this certification. The activity responsible for the Qualified Products List is the San Antonio Air Logistics Center, ATTN: TIRDM, Kelly AFB, TX 78241-5000 and information pertaining to qualification of products may be obtained from that activity.

6.4 Reclaimed materials. The use of reclaimed materials shall be encouraged to the maximum extent possible.

6.5 Changes from previous issue. Marginal notations are not used in this revision to identify changes with respect to the previous issue due to the extensiveness of the changes.

6.6 Subject term (key word) listing.

Elbow
Flexible
Pneumatic

Custodians:
Army - ME
Navy - AS
Air Force - 99

Review activities:
Army - MI, AV
DLA - CS

Preparing activity:
Air Force - 82

(Project No. 4730-0145)

Source: https://assist.dla.mil -- Downloaded: 2016-11-13T05:54Z
Check the source to verify that this is the current version before use.

STANDARDIZATION DOCUMENT IMPROVEMENT PROPOSAL

INSTRUCTIONS

1. The preparing activity must complete blocks 1, 2, 3, and 8. In block 1, both the document number and revision letter should be given.
2. The submitter of this form must complete blocks 4, 5, 6, and 7.
3. The preparing activity must provide a reply within 30 days from receipt of the form.

NOTE: This form may not be used to request copies of documents, nor to request waivers, or clarification of requirements on current contracts. Comments submitted on this form do not constitute or imply authorization to waive any portion of the referenced document(s) or to amend contractual requirements.

I RECOMMEND A CHANGE:	1. DOCUMENT NUMBER MIL-F-8789D	2. DOCUMENT DATE (YYMMDD)

3. DOCUMENT TITLE
Fitting End, Attachable Hydraulic High Pressure Hose

4. NATURE OF CHANGE (Identify paragraph number and include proposed rewrite, if possible. Attach extra sheets as needed.)

5. REASON FOR RECOMMENDATION

6. SUBMITTER

a. NAME (Last, First, Middle Initial)	b. ORGANIZATION
c. ADDRESS (Include Zip Code)	d. TELEPHONE (Include Area Code) (1) Commercial (2) AUTOVON (If applicable) — 7. DATE SUBMITTED (YYMMDD)

8. PREPARING ACTIVITY

a. NAME	b. TELEPHONE (Include Area Code)
SA-ALC/TILDD	(1) Commercial (210)925-~~6413~~ 6314 (2) AUTOVON DSN 945-6314
c. ADDRESS (Include Zip Code) Bldg 171, Post C-12 485 Quentin Roosevelt Rd. Kelly AFB, TX 78241-6425	IF YOU DO NOT RECEIVE A REPLY WITHIN 45 DAYS, CONTACT: Defense Quality and Standardization Office 5203 Leesburg Pike, Suite 1403, Falls Church, VA 22041-3466 Telephone (703) 756-2340 AUTOVON 289-2340

DD Form 1426, OCT 89 — Previous editions are obsolete. — 198/29

Source: https://assist.dla.mil -- Downloaded: 2016-11-13T05:54Z
Check the source to verify that this is the current version before use.