INCH-POUND

MIL-STD-2042-1(SH)
7 July 1993

MILITARY STANDARD

FIBER OPTIC TOPOLOGY INSTALLATION STANDARD METHODS FOR NAVAL SHIPS (CABLES)

(PART 1 OF 6 PARTS)

AMSC N/AAREA GDRQ

DISTRIBUTION STATEMENT A. Approved for public release; distribution is unlimited.

Source: https://assist.dla.mil -- Downloaded: 2016-12-31T20:59Z
Check the source to verify that this is the current version before use.

FOREWORD

DEPARTMENT OF THE NAVY
NAVAL SEA SYSTEMS COMMAND
WASHINGTON, DC 20362-5101

1. This Military Standard is approved for use by the Naval Sea Systems Command, Department of the Navy, and is available for use by all Departments and Agencies of the Department of Defense.

2. Beneficial comments (recommendations, additions, deletions) and any pertinent data which may be of use in improving this document should be addressed to: Commander, Naval Sea Systems Command, SEA 05Q42, Department of the Navy, Washington, DC 20362-5101 by using the self-addressed Standardization Document Improvement Proposal (DD Form 1426) appearing at the end of this document or by letter.

3. This standard provides detailed information and guidance to personnel concerned with the installation of fiber optic topologies on Naval surface ships and submarines. The methods specified herein are not identifiable to any specific ship class or type, but are intended to standardize and minimize variations in installations to enhance the compatibility of fiber optic topologies of all Naval ships.

4. In order to provide flexibility in the use and update of the installation methods, this standard is issued in seven parts; the basic standard and six numbered parts as follows:

Part 1 Cables
Part 2 Equipment
Part 3 Cable Penetrations
Part 4 Cableways
Part 5 Connectors and Interconnections
Part 6 Tests

Source: https://assist.dla.mil -- Downloaded: 2016-12-31T20:59Z
Check the source to verify that this is the current version before use.

CONTENTS

PARAGRAPH		PAGE
1.	SCOPE	1
1.1	Purpose	1
1.1.1	Applicability	1
2.	APPLICABLE DOCUMENTS	2
2.1	Government documents	2
2.1.1	Specifications and standards	2
2.2	Order of precedence	3
3.	DEFINITIONS	4
3.1	General fiber optics terms	4
3.2	Fiber optic topology	4
3.3	Authorized approval	4
3.4	Installing activity	4
3.5	Trunk cable	4
3.6	Local cable	4
3.7	Minimum bend radius	4
3.8	End user equipment	4
3.9	Allocated and used fiber	4
3.10	Allocated and not used fiber	4
3.11	Unallocated fiber	4
3.12	Dedicated fiber	5
3.13	Primary channel	5
3.14	Alternate channel	5
3.15	Non-redundant channel (NRC)	5
3.16	Cable repair	5
3.17	Cable splicing	5
3.18	System specific cables	5
3.19	Fiber optic cable plant	5
3.20	Optical fiber cable component (OFCC)	5
4.	GENERAL REQUIREMENTS	6
4.1	Cables	6
4.1.1	Cable selection	6
4.1.2	Spare optical fibers	6
4.1.3	Cable storage and handling	6
4.1.3.1	Cable storage	6
4.1.3.2	Cable handling	7
4.1.4	Cables entering interconnection boxes or other equipment	7
4.1.5	Cable penetrations	7
4.1.6	Cable installation and protection	7
4.1.7	Cable connections	7
4.1.7.1	Termination of fibers	7
4.1.7.1.1	Allocated and used fibers	8
4.1.7.1.2	Allocated and not used fibers	8
4.1.7.1.3	Unallocated fibers	8
4.1.7.1.4	Dedicated fibers	8
4.1.8	Cable testing	8
4.1.9	Cable and fiber marking	8

Source: https://assist.dla.mil -- Downloaded: 2016-12-31T20:59Z
Check the source to verify that this is the current version before use.

CONTENTS

PARAGRAPH PAGE

4.1.9.1 Fiber identification markers 9
4.1.9.2 Heavy duty connector designation tag 9
4.1.10 Cable repair (see 3.16) 9
4.1.11 Cable splicing (see 3.17) 9
4.2 Safety precautions 10

5. DETAILED REQUIREMENTS 11
5.1 Cable end sealing 11
5.2 Cable repair 11
5.3 Cable splicing 11

6. NOTES 12
6.1 Intended use 12
6.2 Issue of DODISS 12
6.3 Standard method designation 12
6.4 Subject term (key word) listing 12

METHOD
1A1 CABLE END SEALING 1A1-1
1B1 CABLE JACKET REPAIR 1B1-1
1C1 CABLE SPLICING 1C1-1

TABLE
1A1-I Equipment and materials 1A1-1
1A1-II End cap data and sizes for fiber optic cable . . 1A1-2
1B1-I Equipment and materials 1B1-1
1B1-II Repair sleeve dimensions (wraparound) 1B1-2
1B1-III Equipment and materials 1B1-5
1B1-IV Repair sleeve dimensions (tube) 1B1-6
1B1-V Equipment and materials 1B1-9
1C1-I Equipment and materials 1C1-1

FIGURE
1A1-1 Installing expanded end cap on cable 1A1-2
1A1-2 Completed end seal 1A1-3
1B1-1 Damaged cable 1B1-3
1B1-2 Cable preparation 1B1-3
1B1-3 Tape contoured to cable 1B1-3
1B1-4 Installing sleeve 1B1-4
1B1-5 Assembled sleeve 1B1-4
1B1-6 Shrinking sleeve 1B1-4
1B1-7 Trimming rails and metal channel 1B1-5
1B1-8 Damaged cable 1B1-6
1B1-9 Cable preparation 1B1-7
1B1-10 Tape contoured to cable 1B1-7
1B1-11 Shrinking sleeve 1B1-8
1B1-12 Completed repair 1B1-8
1B1-13 Damaged cable 1B1-9
1B1-14 Cable preparation 1B1-10
1B1-15 Tape contoured to cable 1B1-10
1C1-1 Cable splice and housing 1C1-4

Source: https://assist.dla.mil -- Downloaded: 2016-12-31T20:59Z
Check the source to verify that this is the current version before use.

CONTENTS

FIGURE		PAGE
1C1-2	Injecting adhesive into ferrule	1C1-6
1C1-3	Inserting fiber into ferrule	1C1-6
1C1-4	Positioning curing lamp	1C1-7
1C1-5	Scoring fiber	1C1-7
1C1-6	Removing excess adhesive	1C1-8
1C1-7	Quality check	1C1-9
1C1-8	Opening alignment sleeve	1C1-10
1C1-9	Inserting ferrule into alignment sleeve	1C1-10
1C1-10	Inserting second ferrule into alignment sleeve	1C1-10
1C1-11	Aligning tabs	1C1-11
1C1-12	Power meter cable hookup - (typical)	1C1-11

Source: https://assist.dla.mil -- Downloaded: 2016-12-31T20:59Z
Check the source to verify that this is the current version before use.

1. SCOPE

1.1 Purpose. This standard provides detailed methods for fiber optic cable selection, handling, marking, and repair.

1.1.1 Applicability. These criteria apply to installations on specific ships when invoked by the governing ship specification or other contractual document. They are intended primarily for new construction; however, they may also be used for conversion or alteration of existing ships. The rapidly changing state of the art in fiber optic technology makes it essential that some degree of flexibility be exercised in enforcing this document. Where there is a conflict between this document and the ship specification or contract, the ship specification or contract shall take precedence. Where ship design is such that the methods herein cannot be implemented, users shall submit new methods or modifications of existing methods to NAVSEA 06KR22 for approval prior to implementation.

Source: https://assist.dla.mil -- Downloaded: 2016-12-31T20:59Z
Check the source to verify that this is the current version before use.

2. APPLICABLE DOCUMENTS

2.1 Government documents.

2.1.1 Specifications and standards. The following specifications and standards form a part of this document to the extent specified herein. Unless otherwise specified, the issues of these documents are those listed in the issue of the Department of Defense Index of Specifications and Standards (DODISS) and supplement thereto, cited in the solicitation (see 6.2).

SPECIFICATIONS

MILITARY

MIL-A-2877	-	Aluminum Alloy Tape.
MIL-I-23053/5	-	Insulation Sleeving, Electrical, Heat Shrinkable, Polyolefin, Flexible, Crosslinked.
MIL-I-23053/15	-	Insulation Sleeving, Electrical, Heat Shrinkable, Polyolefin, Heavy-Wall, Coated, Flexible, Outer Wall Crosslinked.
MIL-S-24623	-	Splice, Fiber Optic, Shipboard, General Specifications for (Metric).
MIL-C-28876	-	Connectors, Fiber Optic, Circular, Plug and Receptacle Style, Multiple Removable Termini General Specification for.
MIL-F-49291	-	Fiber, Optical, (Metric) General Specification for.
MIL-I-81765/1	-	Insulating Components, Molded, Electrical, Heat Shrinkable, Polyolefin, Crosslinked, Semi-rigid and Flexible.
MIL-C-83522	-	Connectors, Fiber Optic, Fixed Single Terminus, Shipboard, General Specification for.
MIL-C-85045	-	Cable, Fiber Optic, Shipboard (Metric) General Specification for.

Source: https://assist.dla.mil -- Downloaded: 2016-12-31T20:59Z
Check the source to verify that this is the current version before use.

STANDARDS

MILITARY

MIL-STD-2189/305	-	Design Methods For Naval Shipboard Systems Section 305-1, Designation and Marking of Electrical System
DOD-STD-2196	-	Glossary, Fiber Optics
MIL-STD-2042-2	-	Fiber Optic Topology Installation, Standard Methods for Naval Ships (Equipment)
MIL-STD-2042-3	-	Fiber Optic Topology Installation, Standard Methods for Naval Ships (Cable Penetrations)
MIL-STD-2042-4	-	Fiber Optic Topology Installation, Standard Methods for Naval Ships (Cableways)
MIL-STD-2042-5	-	Fiber Optic Topology Installation, Standard Methods for Naval Ships (Connectors and Interconnections)
MIL-STD-2042-6	-	Fiber Optic Topology Installation, Standard Methods for Naval Ships (Tests)

(Unless otherwise indicated, copies of federal and military specifications, standards, and handbooks are available from the Standardization Documents Order Desk, Building 4D, 700 Robbins Ave, Philadelphia, PA, 19111-5094.)

2.2 Order of precedence. In the event of a conflict between the text of this standard and the references cited herein, the text of this standard shall take precedence. Nothing in this document, however, supersedes applicable laws and regulations unless a specific exemption has been obtained.

Source: https://assist.dla.mil -- Downloaded: 2016-12-31T20:59Z
Check the source to verify that this is the current version before use.

3. DEFINITIONS

3.1 General fiber optics terms. Definitions for general fiber optics terms used in this standard are in accordance with DOD-STD-2196. Definitions for other terms as they are used in this standard are given in the following paragraphs.

3.2 Fiber optic topology. The fiber optic topology consists of fiber optic interconnection boxes, trunk and local cables and the connectors and splices used to interconnect the trunk and local cables.

3.3 Authorized approval. Authorized approval is written approval from the cognizant Government activity.

3.4 Installing activity. An installing activity is any military or commercial organization involved with the installation of fiber optic topologies aboard Naval ships.

3.5 Trunk cable. A trunk cable is a fiber optic cable that provides a continuous optical path between interconnection boxes. Typically, trunk cables are run in the main cableways and have higher fiber counts per cable than local cables.

3.6 Local cable. A local cable is a fiber optic cable that provides a continuous optical path between an end user equipment and an interconnection box, and is typically not run through the main cableways.

3.7 Minimum bend radius. The minimum bend radius of a fiber optic cable (and OFCC, see 3.20) is the radius at which the cable can be bent without degrading optical performance. The dynamic bend applies during handling and installing; the static bend applies to the completed installation.

3.8 End user equipment. End user equipment refers to any cabinet, case, panel, or device that contains components that are either the origin or destination of an optical signal.

3.9 Allocated and used fiber. An allocated and used fiber is a fiber that is designated and required for use for a particular system link.

3.10 Allocated and not used fiber. An allocated and not used fiber is a fiber that is designated but not actively used for a particular system.

3.11 Unallocated fiber. An unallocated fiber is a fiber that is not designated for use for any system.

Source: https://assist.dla.mil -- Downloaded: 2016-12-31T20:59Z
Check the source to verify that this is the current version before use.

3.12 Dedicated fiber. A dedicated fiber is a fiber that is designated for use between an interconnection box and an interconnection box in damage control.

3.13 Primary channel. A primary channel is an allocated and used active link between system equipment that has a designated active backup link.

3.14 Alternate channel. An alternate channel is the allocated and used active backup link for a primary channel.

3.15 Non-redundant channel (NRC). A non-redundant channel is any allocated and used active link that has no system required backup link, but is provided with redundant trunk fibers by the topology.

3.16 Cable repair. Cable repair refers to restoration of only the outermost cable jacket.

3.17 Cable splicing. Cable splicing, as used in this standard, refers to the repair of damaged fiber optic cables by reconnecting severed fibers and providing an environmental enclosure at the spliced region.

3.18 System specific cables. System specific cables are those fiber optic cables that connect end user equipments and do not interface with a fiber optic cable plant (see 3.19).

3.19 Fiber optic cable plant. The fiber optic cable plant is the portion of the fiber optic topology made up of the trunk cables and interconnection boxes.

3.20 Optical fiber cable component (OFCC). An OFCC is a buffered fiber augmented with a concentric layer of strength members and an overall jacket.

Source: https://assist.dla.mil -- Downloaded: 2016-12-31T20:59Z
Check the source to verify that this is the current version before use.

4. GENERAL REQUIREMENTS

4.1 Cables. Fiber optic cables for Naval shipboard application shall be in accordance with MIL-C-85045.

4.1.1 Cable selection. Cables selected shall be those referenced in ship specifications, ship installation drawings, contract drawings, or other approved drawings as specified in the contract or by the cognizant Government activity. Substitute cables shall not be used without authorized approval (see 3.3). In those instances where the installing activity (see 3.4) is responsible for determining the correct type and size cable for a specific application, the fiber optic cables shall be selected in accordance with MIL-C-85045. Fibers shall be in accordance with MIL-F-49291, either type SU (single mode) or type MM (multimode) as required by the system.

4.1.2 Spare optical fibers. The number of spare optical fibers shall be in accordance with the ship specification and system drawings. Spare fibers are located in both trunk cables and local cables which penetrate bulkheads or decks (see 3.5 and 3.6).

4.1.3 Cable storage and handling.

4.1.3.1 Cable storage. Cables shall be stored in a dry place protected from the weather and limited to a temperature range of not less than -80 degrees Fahrenheit (°F) [-62 degrees Celsius (°C)] nor greater than +160°F (+71°C). A cable that has been in storage for less than one year may be installed if a visual inspection of the cable shows no mechanical damage that would impair the watertight integrity of the cable's outer sheath or the integrity of the optical fiber cable components (OFCC's). A cable that has been in storage for one year or longer may be installed if it passes the visual inspection in accordance with Method 6A1 in Part 6 of this standard, and if the attenuation measured in accordance with Method 6B1 in Part 6 of this standard is less than the value specified. Cables shall be stored on reels with minimum diameters of 24 times the cable outside diameter or coiled so that the bend radius shall be not less than 24 times the cable outside diameter. Bare ends of stored cables shall be sealed against moisture using heat shrink end caps as specified herein (see 5.1). Terminated cables shall be sealed against moisture using connector dust covers (for multiple terminus connectors), plastic caps or heat shrink end caps as specified herein (see 5.1).

Source: https://assist.dla.mil -- Downloaded: 2016-12-31T20:59Z
Check the source to verify that this is the current version before use.

4.1.3.2 Cable handling. During handling, the cable shall be protected from crushing, kinks, twists, and bends that violate the minimum dynamic bend radius of four times the cable outside diameter (see 3.7). Additional caution shall be used when handling cables in ambient temperatures at or below 36°F (2°C) (see Part 4 of this standard).

4.1.4 Cables entering interconnection boxes or other equipment. Cables shall enter interconnection boxes or other equipment in accordance with the methods in Part 2 of this standard.

4.1.5 Cable penetrations. The passing of cables through decks and bulkheads shall be in accordance with the methods in Part 3 of this standard.

4.1.6 Cable installation and protection. Fiber optic cables shall be installed in the cableways and protected in accordance with Part 4 of this standard.

4.1.7 Cable connections. Cable connections to equipment external to the topology, such as end user equipment (see 3.8), shall be made with multiple terminus heavy duty connectors in accordance with MIL-C-28876, or single terminus light duty connectors in accordance with MIL-C-83522, or splices in accordance with MIL-S-24623 as specified in Part 5 of this standard. Light duty connectors and splices used for external equipment connections shall be housed within that equipment. Light duty connectors and splices used for cable interconnections internal to the topology shall be housed within interconnection boxes, as specified in Part 2 of this standard.

4.1.7.1 Termination of fibers. There are four categories of fibers:

a. Allocated and used (see 3.9).

b. Allocated and not used (see 3.10)

c. Unallocated (see 3.11).

d. Dedicated (see 3.12).

The quantity of each category shall be as specified in the ship specification and on the system drawings.

Source: https://assist.dla.mil -- Downloaded: 2016-12-31T20:59Z
Check the source to verify that this is the current version before use.

4.1.7.1.1 Allocated and used fibers. The allocated and used trunk and local cable fibers are primary channel fibers (see 3.13), alternate channel fibers (see 3.14), and non-redundant channel (NRC) fibers (see 3.15). These fibers shall be terminated in accordance with the system control drawings.

4.1.7.1.2 Allocated and not used fibers. The allocated and not used trunk cable fibers are system required spares, system required redundant fibers, and redundant fibers supplied by the cable topology to system non-redundant channel fibers. The allocated and not used local cable fibers are system spares and system required redundant fibers. These fibers shall be terminated in accordance with the system control or cable topology drawings. If there are no system requirements, either the splice or single terminus connector may be installed as required to meet the system link loss budget.

4.1.7.1.3 Unallocated fibers. The unallocated trunk cable fibers are cable topology general spares and growth fibers for unidentified future systems. Only those local cables that penetrate decks and bulkheads will contain unallocated fibers. These fibers will be designated as general spares and will be stored unterminated in the interconnection box.

4.1.7.1.4 Dedicated fibers. The dedicated fibers, where required, are for communication between vital spaces and damage control. These fibers shall be terminated in accordance with the ship control drawings.

4.1.8 Cable testing. Cables shall undergo testing before, during, and after installation in accordance with Part 6 of this standard.

4.1.9 Cable and fiber marking. All cables shall be marked in accordance with the ship specification and system drawings and as specified herein. Cable identification tags external to the equipment shall be in accordance with MIL-STD-2189/305 and shall be located as specified in Part 4 of this standard. Cable tags shall be of a size suitable to accommodate the required marking but shall have a minimum width of 1/2 inch (13 mm). Tags and strips for marking cables shall be of soft aluminum tape having a natural finish in accordance with MIL-A-2877. Capital letters shall be used on cable tags; height of all letters shall be not less than 3/16 inch (5 mm), and letters and numbers shall be embossed to at least 1/64 inch (0.4 mm) above the surface.

Source: https://assist.dla.mil -- Downloaded: 2016-12-31T20:59Z
Check the source to verify that this is the current version before use.

4.1.9.1 Fiber identification markers. Heat shrink tubing marked with the fiber identification specified in the ship specification and system drawings shall be used to identify OFCC's or buffered fibers at their termination point within the interconnection box. The identification markers shall always be installed with the left hand marking group next to the termination point. The sleeve shall be positioned so that it can be easily read without disturbing other components within the equipment. Heat shrink tubing shall be white and in accordance with MIL-I-23053/5.

4.1.9.2 Heavy duty connector designation tag. Cables that terminate in a heavy duty connector shall have a tag placed on the cable next to the connector designating the jack to which the connector is to be attached.

4.1.10 Cable repair (see 3.16). Damage to the outermost fiber optic cable jacket shall be repaired according to procedures specified herein (see 5.2). Cable with damage extending beyond the cable outer jacket to the kevlar strength members or to the OFCC outer jacket shall be replaced or spliced (see 4.1.11).

4.1.11 Cable splicing (see 3.17). System specific cables (see 3.18) damaged during installation that require splicing shall be spliced only after the cognizant Government activity has determined that the time and cost of replacing the damaged cable with a new cable is excessive, that the damaged cable is in otherwise good mechanical and optical condition, and that the splice losses will not impinge on the power budget of the link or system. Only one splice per system specific cable shall be allowed. Splices shall not be located in voids or normally inaccessible spaces. Local cables and topology trunk cables damaged during installation that require splicing shall be replaced.

4.2 Safety precautions. The following safety precautions apply:

a. Observe all written safety precautions given in the methods of this standard.

b. Observe all warning signs on equipment and materials.

Source: https://assist.dla.mil -- Downloaded: 2016-12-31T20:59Z
Check the source to verify that this is the current version before use.

c. The classification of a laser is based on the ability of the optical beam to cause damage to the eye. Under normal operating conditions, an optical fiber communication system (OFCS) is inherently an eye safe system; but, when an optical fiber connection is broken and optical viewing instruments are used, it is possible that hazardous energy can enter the eye. For this reason four service group hazard classes have been devised to indicate the degree of hazard and required hazard control measures. Refer to ANSI Z136.2 for a full technical definition. The following laser safety precautions shall apply:

(1) Ensure personnel are familiar with the laser degree of hazard and the required control measures.

(2) Light generated by light emitting diodes (LED's) and laser diodes may not be visible but is still hazardous to the unprotected eye. Never look into the end of an optical fiber connected to an LED or laser diode and do not examine or stare into broken, severed or disconnected optical cables.

(3) When access panels or doors are removed or opened and the critical viewing distance could exceed 39 inches (100 cm), use means to contain the beam to preclude exposure of nearby personnel.

(4) Do not view the primary beam or a specular reflection from an OFCS with an optical microscope, eye loupe or other viewing instrument. The instrument may create a hazard due to its light gathering capability.

d. Safety glasses shall be worn when handling bare fibers. Always handle cable carefully to avoid personal injury. The ends of optical fibers are extremely sharp and can lacerate or penetrate the skin or cause permanent eye damage if touched. If the fiber penetrates the skin, it most likely will break off, in which case the extraction of the fiber should be performed by trained medical personnel to prevent further complications.

e. Wash hands after handling bare fibers.

f. Ultraviolet (UV) safety glasses shall be worn when using UV curing lamp.

Source: https://assist.dla.mil -- Downloaded: 2016-12-31T20:59Z
Check the source to verify that this is the current version before use.

5. DETAILED REQUIREMENTS

5.1 Cable end sealing. Unterminated cables that are not to be installed in cableways within 48 hours shall have their ends sealed against moisture in accordance with Method 1A1 of this standard.

5.2 Cable repair. Damage to cable outer jackets (see 4.1.10) shall be repaired using cable jacket repair sleeves or tape, in accordance with Method 1B1 of this standard.

5.3 Cable splicing. Cable splicing (see 4.1.11) shall be in accordance with Method 1C1 of this standard.

Source: https://assist.dla.mil -- Downloaded: 2016-12-31T20:59Z
Check the source to verify that this is the current version before use.

6. NOTES

(This section contains information of a general or explanatory nature that may be helpful, but is not mandatory.)

6.1 Intended use. The methods for cable end-sealing and cable repair depicted in this standard are intended primarily for new construction; however, they may be used for conversion or alteration of existing ships.

6.2 Issue of DODISS. When this standard is used in acquisition, the applicable issue of DODISS must be cited in the solicitation (see 2.1.1).

6.3 Standard method designation. To simplify the usage of this standard, an alpha-numeric designation system was developed to identify and locate a given method. The methods were grouped together by function as follows:

Group A: Cable end sealing
Group B: Cable jacket repair
Group C: Cable splicing

Then the designation system was completed as follows:

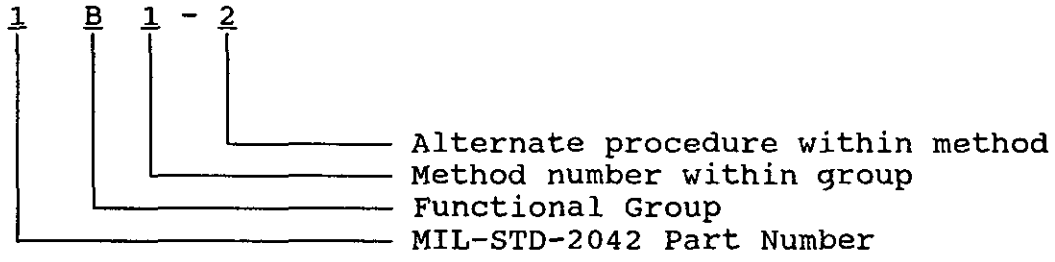

Thus, method 1B1-2 identifies the second alternate procedure within method 1 of group B in Part 1 (MIL-STD-2042-1) of MIL-STD-2042.

6.4 Subject term (key word) listing.

Cable selection
Cable storage and handling
Cable marking
Cable penetrations
Cable connections
Cable testing
Cable repair
Cable splicing
Fiber optic cable
Optical fiber cable component (OFCC)

Source: https://assist.dla.mil -- Downloaded: 2016-12-31T20:59Z
Check the source to verify that this is the current version before use.

Preparing activity:
NAVY - SH
(Project GDRQ-N128)

Source: https://assist.dla.mil -- Downloaded: 2016-12-31T20:59Z
Check the source to verify that this is the current version before use.

METHOD 1A1

CABLE END SEALING

1. SCOPE.

1.1 Scope. This method describes a procedure for fiber optic cable end sealing during temporary and long term storage to prevent water or other liquids from damaging the fibers.

2. REQUIRED EQUIPMENT AND MATERIALS.

2.1 The equipment and materials in table 1A1-I shall be used to perform this procedure.

TABLE 1A1-I. Equipment and materials.

Description	Quantity
Safety glasses	1
Ruler	1
Heat gun (Raychem 500B or equal)	1
Alcohol bottle with alcohol/2-propanol or equal (sealable type)	1
Wipes (TEXWIPE TX404T or equal)	As required
Canned air (Fisher Scientific Co. Cat. No. 15-232-20 or equal (or compressed air)	As required

3. PROCEDURE.

3.1 Safety Summary. The following safety precautions shall be observed:

a. Safety glasses shall be worn at all times when handling bare fibers.

b. Do not touch ends of fiber as they are razor sharp. Wash hands after handling fiber.

c. Observe warnings and cautions on equipment and materials.

d. Never look into the end of a fiber connected to a laser source or LED.

Source: https://assist.dla.mil -- Downloaded: 2016-12-31T20:59Z
Check the source to verify that this is the current version before use.

3.2 Procedure.

NOTE: End caps shall meet requirements of MIL-I-81765/1 and table 1A1-II. Tube interior shall be coated with heat activated adhesive.

Step 1 - Clean end of cable with wipe dampened with alcohol and blow dry as necessary.

Step 2 - Select end cap in accordance with table 1A1-II.

TABLE 1A1-II. End cap data and sizes for fiber optic cable.

Cable type	Cable O.D. inches (mm) (nominal)	End cap dimensions inches (mm)		
		Length (min)	Expanded I.D.(min)	Recovered I.D.(max)
2-Fiber	0.28 (7)	3.00 (76)	0.35 (9)	0.18 (5)
4-Fiber	0.31 (8)	3.00 (76)	0.35 (9)	0.18 (5)
8-Fiber	0.43 (11)	3.00 (76)	0.81 (21)	0.37 (9)

Step 3 - Slide end cap over end of cable to be sealed. Position end cap to ensure a 1 inch (25 mm) minimum overlap (see figure 1A1-1).

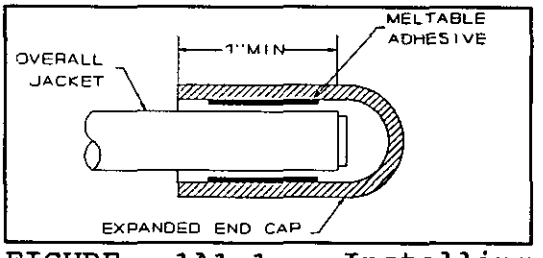

FIGURE 1A1-1. Installing expanded end cap on cable.

Step 4 - **CAUTION:** Do not overheat cable. Prolonged exposure of jacket to temperatures above 320°F (160°C) may damage cable jacket.

Hold heat gun approximately 4 inches (102 mm) from end cap and as heat is applied, move heat gun back and forth over end cap. Shrink end cap from closed end to open end to avoid trapping air. (NOTE: Minimum recovery temperature is 250°F (121°C).

Source: https://assist.dla.mil -- Downloaded: 2016-12-31T20:59Z
Check the source to verify that this is the current version before use.

Step 5 - When end cap has recovered enough to assume configuration of cable and excess adhesive appears at end of cap, discontinue heating (see figure 1A1-2). (NOTE: Additional heat will not make end cap shrink more tightly.)

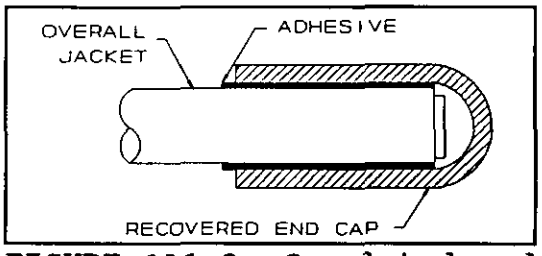

FIGURE 1A1-2. Completed end seal.

Source: https://assist.dla.mil -- Downloaded: 2016-12-31T20:59Z
Check the source to verify that this is the current version before use.

METHOD 1B1

CABLE JACKET REPAIR

1. SCOPE.

1.1 Scope. This method describes procedures for repairing the damaged outer jacket of a cable with kevlar strength members intact.

2. REQUIRED EQUIPMENT AND MATERIALS.

2.1 The equipment and materials in the tables located in the applicable sections of this method shall be used to perform these procedures.

3. PROCEDURES.

3.1 Safety summary. The following safety precautions shall be observed:

a. Safety glasses shall be worn when handling bare fibers.

b. Do not touch ends of fiber as they are razor sharp. Wash hands after handling fiber.

c. Observe warnings and cautions on equipment and materials.

d. Never look into the end of a fiber connected to a laser source or LED.

3.2 Procedure I. Method 1B1-1. Wraparound sleeve with rail closure.

3.2.1 The equipment and materials in table 1B1-I shall be used to perform this procedure.

TABLE 1B1-I. Equipment and materials.

Description	Quantity
Safety glasses	1
Ruler	1
Electricians knife	1
Emery cloth (or fine file)	As required

Source: https://assist.dla.mil -- Downloaded: 2016-12-31T20:59Z
Check the source to verify that this is the current version before use.

TABLE 1B1-I. Equipment and materials - continued.

Description	Quantity
Adhesive and sealant tape (Raychem Thermofit S1030 or equal)	As required
Repair sleeve	1
Heat gun (Raychem 500B or equal)	1
Alcohol bottle with alcohol/2-propanol or equal (sealable type)	1
Wipes (TEXWIPE TX404T or equal)	As required
Canned air (Fisher Scientific Co. Cat. No. 15-232-20 or equal(or compressed air)	As required

NOTE: Cable jacket repair sleeve material shall meet requirements of MIL-I-23053/15 and table 1B1-II. Material shall be coated with heat-activated adhesive and fabricated into a wrap around sleeve with a rail closure system as shown on the figures below.

Step 1 - Select repair sleeve in accordance with table 1B1-II and figure 1B1-2.

TABLE 1B1-II. Repair sleeve dimensions (wraparound).

Cable type	Cable O.D. inches (mm) (nominal)	B Dimension inches (mm)	Repair sleeve dimensions inches (mm)			
			Length (minimum)	Rail to rail		Wall thickness after shrinking
				Expanded I.D. (minimum)	Recovered I.D. (maximum)	
2-Fiber	0.28 (7)	3.00 (76)	A + 2B	1.20 (30)	0.24 (6)	0.06 ± 0.01 (2±0.2)
4-Fiber	0.31 (8)	3.00 (76)	A + 2B	1.20 (30)	0.24 (6)	0.06 ± 0.01 (2±0.2)
8-Fiber	0.43 (11)	3.00 (76)	A + 2B	1.20 (30)	0.24 (6)	0.06 ± 0.01 (2±0.2)

Source: https://assist.dla.mil -- Downloaded: 2016-12-31T20:59Z
Check the source to verify that this is the current version before use.

Step 2 - Trim off frayed, burned, or protruding jacket material with knife using care not to damage kevlar or OFCC jacket (see figure 1B1-1). Square up where required.

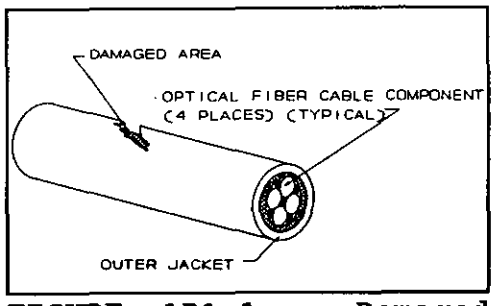

FIGURE 1B1-1. Damaged cable.

Step 3 - Abrade jacket circumferentially to dimension shown using emery cloth or fine file (see table 1B1-II and figure 1B1-2).

Step 4 - Clean abraded area with wipe dampened with alcohol, and blow dry with air.

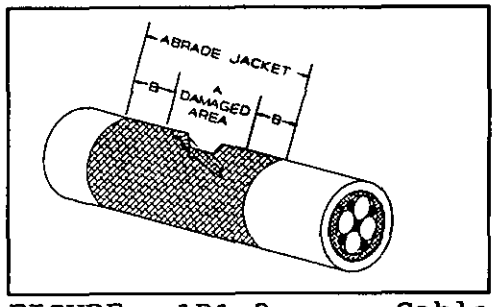

FIGURE 1B1-2. Cable preparation.

Step 5 - Fill depressions/voids with tape, as required, to restore cable contour as follows:

WARNING: Application of too much heat will cause adhesive to flow and may cause burns if it comes in contact with the skin.

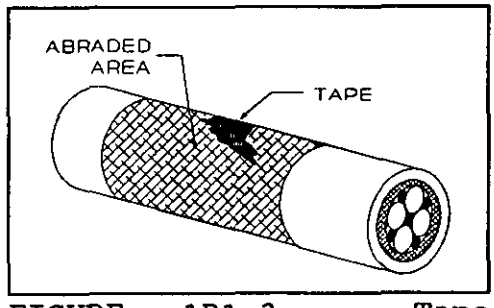

FIGURE 1B1-3. Tape contoured to cable.

Cut off short strips of adhesive tape and heat slightly with heat gun to soften them. Roll tape with fingers and press into damaged area. Repeat process until damaged area is filled then, holding heat gun approximately 4 inches (102 mm) away, apply just enough heat to tape to form and contour to cable (see figure 1B1-3).

Step 6 - Cut cable jacket repair sleeve to proper length (see table 1B1-II).

Source: https://assist.dla.mil -- Downloaded: 2016-12-31T20:59Z
Check the source to verify that this is the current version before use.

Step 7 - **CAUTION:** Do not overheat cable. Jacket should be just warm to the touch. Prolonged exposure of jacket to temperatures above 320°F (160°C) may damage the cable jacket.

Hold heat gun approximately 4 inches (102 mm) away from cable and apply heat to all parts of cable jacket to which repair sleeve is to be applied.

Step 8 - Assemble repair sleeve as shown (see figure 1B1-4). leave approximately 0.5 inch (13 mm) overhang of channel on both sides of sleeve (see figure 1B1-5).

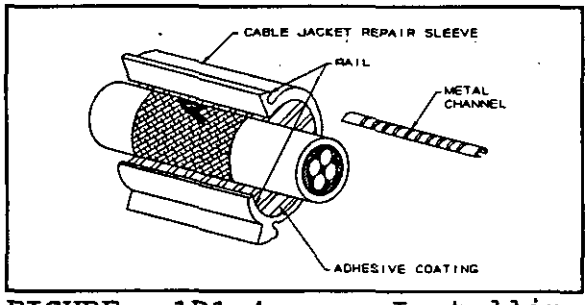

FIGURE 1B1-4. Installing sleeve.

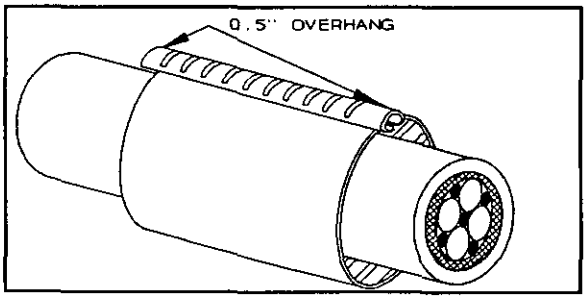

FIGURE 1B1-5. Assembled sleeve.

Step 9 - **CAUTION:** Do not overheat cable. Prolonged exposure of jacket to temperatures above 320°F (160°C) may damage the cable jacket.

Center sleeve over damaged area and, holding heat gun approximately 4 inches (102 mm) away, heat evenly from center to ends around entire sleeve until sleeve changes color (see manufacturer's instructions) indicating full recovery (see figure 1B1-6). Melted sealant should be visible at end of sleeve.

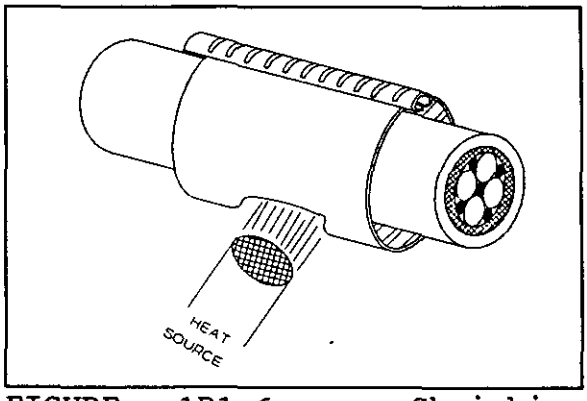

FIGURE 1B1-6. Shrinking sleeve.

Source: https://assist.dla.mil -- Downloaded: 2016-12-31T20:59Z
Check the source to verify that this is the current version before use.

Step 10 - When sleeve has cooled, rail and metal channel may be trimmed from sleeve to provide greater flexibility to cable (see figure 1B1-7).

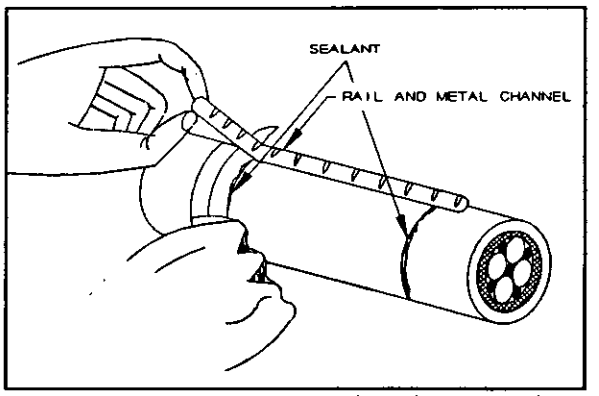

FIGURE 1B1-7. Trimming rails and metal channel.

3.3 Procedure II. Method 1B1-2 tube sleeve.

3.3.1 The equipment and materials in table 1B1-III shall be used to perform this procedure.

TABLE 1B1-III. Equipment and materials.

Description	Quantity
Safety glasses	1
Ruler	1
Electricians knife	1
Emery cloth (or fine file)	As required
Repair sleeve	1
Adhesive and sealant tape (Raychem Thermofit S1030 or equal)	As required
Heat gun (Raychem 500B or equal)	1
Alcohol bottle with alcohol/2-propanol or equal (sealable type)	1
Wipes (TEXWIPE TX404T or equal)	As required
Canned air (Fisher Scientific Co. Cat. No. 15-232-20 or equal(or compressed air)	As required

Source: https://assist.dla.mil -- Downloaded: 2016-12-31T20:59Z
Check the source to verify that this is the current version before use.

NOTE: Cable repair sleeve material shall meet requirements of MIL-I-23053/15 and table 1B1-IV. Material shall be coated with a heat activated adhesive and fabricated into a tube shape as shown on the figures below.

Step 1 - Select repair sleeve in accordance with table 1B1-IV (see figure 1B1-9).

TABLE 1B1-IV. Repair sleeve dimensions (tube).

Cable type	Cable O.D. inches (mm) (nominal)	B Dimension inches (mm)	Repair sleeve dimensions inches (mm)			
			Length (minimum)	Inside diameter		Wall thickness after shrinking
				Expanded (minimum)	Recovered (minimum)	
2-Fiber	0.28 (7)	4.00 (101)	A + 2B	1.50 (38)	0.23 (6)	0.08 ± 0.01 (2±0.2)
4-Fiber	0.31 (8)	4.00 (101)	A + 2B	1.50 (38)	0.23 (6)	0.08 ± 0.01 (2±0.2)
8-Fiber	0.43 (11)	4.00 (101)	A + 2B	2.00 (51)	0.34 (9)	0.08 ± 0.01 (2±0.2)

Step 2 - Trim off frayed, burned, or protruding jacket material with knife using care not to damage kevlar or OFCC jacket (see figure 1B1-8). Square up where required.

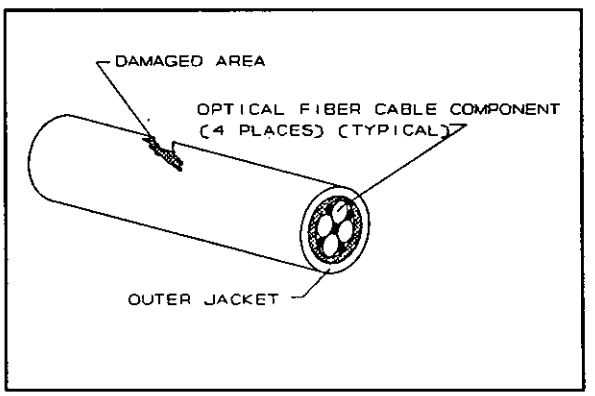

FIGURE 1B1-8. Damaged cable.

Source: https://assist.dla.mil -- Downloaded: 2016-12-31T20:59Z
Check the source to verify that this is the current version before use.

Step 3 - Abrade jacket circumferentially to dimension shown using emery cloth or fine file (see table 1B1-IV and figure 1B1-9).

Step 4 - Clean abraded area with alcohol and blow dry with air.

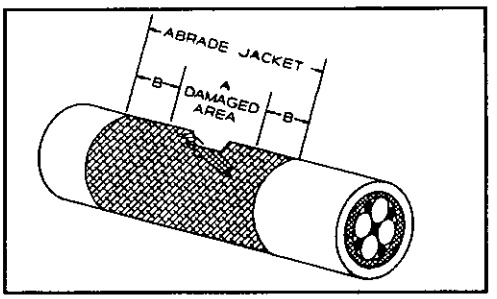

FIGURE 1B1-9. Cable preparation.

Step 5 - Fill depressions/voids with tape, as required, to restore cable contour as follows:

WARNING: Application of too much heat will cause adhesive to flow and may cause burns if it comes in contact with the skin.

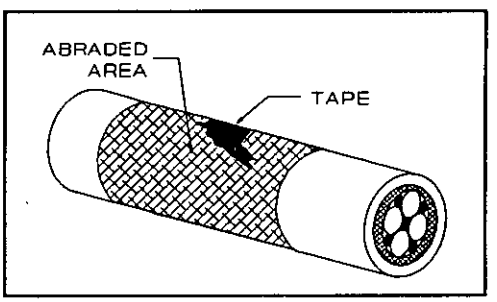

FIGURE 1B1-10. Tape contoured to cable.

Cut off short strips of adhesive tape and heat slightly with heat gun to soften them. Roll tape with fingers and press into damaged area. Repeat process until damaged area is filled, then, holding heat gun approximately 4 inches (102 mm) away, apply just enough heat to tape to form and contour to cable (see figure 1B1-10).

Step 6 - Cut cable jacket repair sleeve to proper length (see table 1B1-IV.)

Source: https://assist.dla.mil -- Downloaded: 2016-12-31T20:59Z
Check the source to verify that this is the current version before use.

Step 7 - **CAUTION:** Do not overheat cable. Prolonged exposure of jacket to temperatures above 320°F (160°C) may damage the cable jacket.

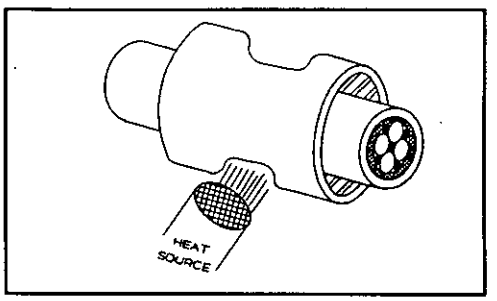

FIGURE 1B1-11. Shrinking sleeve.

Center repair sleeve over damaged area. Hold heat gun approximately 4 inches (102 mm) away and heat center by applying heat evenly around the sleeve until it shrinks over cable (see figure 1B1-11). Working towards one end, shrink sleeve to cable until sealant is flowing at end of sleeve. Repeat procedure on other half of sleeve (see figure 1B1-12).

Step 8 - Remove heat and allow sleeve to cool.

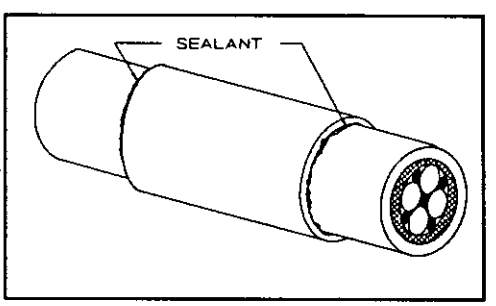

FIGURE 1B1-12. Completed repair.

Source: https://assist.dla.mil -- Downloaded: 2016-12-31T20:59Z
Check the source to verify that this is the current version before use.

3.4 Procedure III. Method 1B1-3 rubber tape.

3.4.1 The equipment and materials in table 1B1-V shall be used to perform this procedure.

TABLE 1B1-V. Equipment and materials.

Description	Quantity
Safety glasses	1
Ruler	1
Electricians knife	1
Emery cloth (or fine file)	As required
Adhesive and sealant tape (Raychem Thermofit S1030 or equal)	As required
Heat gun (Raychem 500B or equal)	1
Fiberglass tape (1 in.)	As required
Electrical coating (3M Scotch Kote or equal)	As required
Alcohol bottle with alcohol/2-propanol or equal (sealable type)	1
Wipes (TEXWIPE TX404T or equal)	As required
Canned air (Fisher Scientific Co. Cat. No. 15-232-20 or equal(or compressed air)	As required

Step 1 - Trim off frayed, burned, or protruding jacket material with knife using care not to damage kevlar or OFCC jacket (see figure 1B1-13). Square up where required.

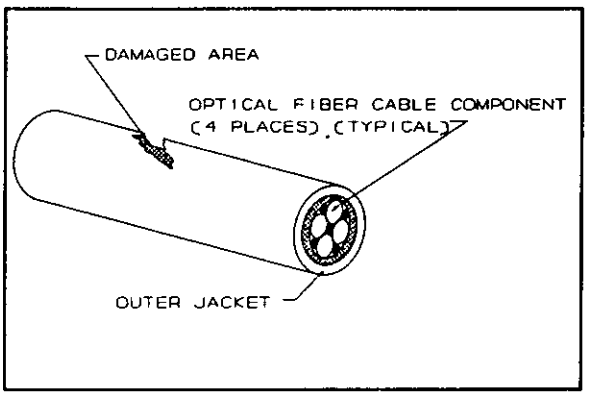

FIGURE 1B1-13. Damaged cable.

Source: https://assist.dla.mil -- Downloaded: 2016-12-31T20:59Z
Check the source to verify that this is the current version before use.

Step 2 - Abrade jacket circumferentially approximately 3 inches on either side of damaged area using emery cloth or fine file (see figure 1B1-14).

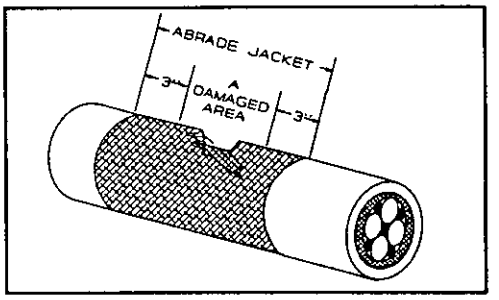

FIGURE 1B1-14. Cable preparation.

Step 3 - Clean abraded area with alcohol and blow dry with air.

Step 4 - Fill depressions/voids with adhesive tape as required to restore cable contour as follows:

WARNING: Application of too much heat will cause adhesive to flow and may cause burns if it comes in contact with the skin.

Cut off short strips of adhesive tape and heat slightly with heat gun to soften them. Roll tape with fingers and press into damaged area. Repeat process until damaged area is filled then, holding heat gun approximately 4 inches (102 mm) away, apply just enough heat to tape to form and contour to cable (see figure 1B1-15).

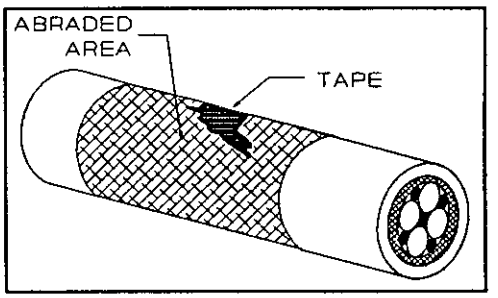

FIGURE 1B1-15. Tape contoured to cable.

Step 5 - Cover entire abraded area with one layer of half lapped adhesive and sealant tape, pulling tape to approximately half its original thickness.

Step 6 - Cover adhesive and sealant tape with one layer of half lapped fiberglass tape.

Step 7 - **CAUTION:** Do not over heat cable. Prolonged exposure of jacket to temperatures above 320°F (160°C) may damage the cable jacket.

Holding heat gun approximately 4 inches (120 mm) away from cable, heat entire area covered by tape for approximately 3.5 minutes with heat gun to blend adhesive and sealant into fiberglass tape.

Source: https://assist.dla.mil -- Downloaded: 2016-12-31T20:59Z
Check the source to verify that this is the current version before use.

Step 8 - Apply coat of electrical coating to entire area and let set a minimum of 10 minutes.

Source: https://assist.dla.mil -- Downloaded: 2016-12-31T20:59Z
Check the source to verify that this is the current version before use.

METHOD 1C1

CABLE SPLICING

1. SCOPE

1.1 Scope. This method describes a procedure for restoring the mechanical and optical integrity of a cable with severed fibers.

2. REQUIRED EQUIPMENT AND MATERIALS

2.1 The equipment and materials in table 1C1-I shall be used to perform this procedure.

TABLE 1C1-I. Equipment and materials.

Description	Quantity
Safety glasses	1
Ruler	1
Cable jacket stripper (AT&T Comcode 105-114-581 or equal)	1
Kevlar shears (Clauss 86 1/2S or equal)	1
OFCC strip tool (AT&T Comcode 104-278-478, P/N 700A or equal)	1
Buffer strip tool (K-Miller Tools F/O 103S or equal)	1
UV cure adhesive (AT&T D181598 Comcode 105-205-660 or equal)	As required
Syringe (Beckton-Dickinson 9585 or equal)	As required
Dispensing needles (AT&T Comcode 105-157-879 or equal)	As required
UV curing lamp (AT&T Comcode 104-437-074 or equal)	1
UV absorbing glasses (AT&T Comcode 105-195-028 or equal)	1
Cleaver (AT&T Comcode 103-808-770, P/N 975A or equal)	1
Utility knife	1

Source: https://assist.dla.mil -- Downloaded: 2016-12-31T20:59Z
Check the source to verify that this is the current version before use.

TABLE 1C1-I. Equipment and materials - continued.

Description	Quantity
Polishing paper, 8 μm, aluminum oxide (AT&T Comcode 105-205-652 or equal)	As required
Glass polishing plate (AT&T Comcode 105-075-618 or equal)	1
Polishing tool (AT&T Comcode 104-030-507, P/N 992A or equal)	1
Polishing paper, 1 μm, aluminum oxide, mylar backed (AT&T Comcode 105-076-798 or equal)	As required
7x eye loupe (AT&T Comcode 403-663-347 or equal)	1
High intensity incandescent back light (Roxter Model 6490 or equal)	1
Index matching gel (AT&T Comcode 402-698-302, P/N AT8955 or equal)	As required
Splice alignment clip tool (AT&T Comcode 104-030-523, P/N 994A or equal)	1
Splice alignment tool (AT&T Comcode 104-407-499, P/N 1011B or equal)	1
Test adapters (in accordance with table 6C1-III in Part 6 of this standard)	As required
Test jumpers (in accordance with table 6C1-III in Part 6 of this standard)	As required
Light source (3M Photodyne source driver 9XT, source module 1700-1300-T or equal for multimode fiber) or Light source (3M Photodyne source module driver 9XT, source module 1720SM1310-T or equal for single mode fiber)	1
Power meter (3M Photodyne detector driver 22XLC, detector module model 585 or equal)	1
"O"-ring lubricant (Bray Cote 609 or equal)	1
Spanner wrench	1
Torque Wrench	1
Alcohol bottle with alcohol/2-propanol or equal (sealable type)	1
Water bottle (sealable type)	1

Source: https://assist.dla.mil -- Downloaded: 2016-12-31T20:59Z
Check the source to verify that this is the current version before use.

TABLE 1C1-I. Equipment and materials - continued.

Description	Quantity
Canned air (Fisher Scientific Co. Cat. No. 15-232-20 or equal(or compressed air)	As required
Wipes (TEXWIPE TX404T or equal)	As required
Protective caps (plastic)	As required

3. PROCEDURES

3.1 Safety summary. The following safety precautions shall be observed:

a. Safety glasses shall be worn at all times when handling bare fibers or dispensing epoxy.

b. Do not touch ends of bare fiber. Wash hands thoroughly after handling bare fibers.

c. Avoid skin contact with epoxy adhesive.

d. Do not look into end of a fiber until verifying that the fiber is not connected to a laser light source or LED.

e. Ultraviolet (UV) safety glasses shall be worn when using UV curing lamp.

3.2 Procedure.

3.2.1 Cable and fiber preparation.

Step 1 - If cable is not completely severed in two, using scissors, cut each OFCC in two at break in cable. Cut remaining outer jacket in two.

NOTE: Keep cable and accessories free from oil, dirt, and grease throughout installation procedure. If cleaning is necessary, use wipe dampened with alcohol and blow dry with air.

Source: https://assist.dla.mil -- Downloaded: 2016-12-31T20:59Z
Check the source to verify that this is the current version before use.

Step 2 - Slide the following cable splice assembly parts only onto one end of severed cable in the order indicated below (see figure 1C1-1):

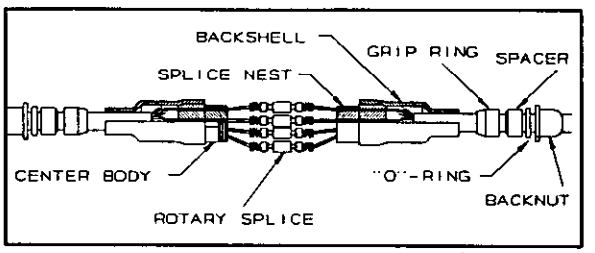

FIGURE 1C1-1. Cable splice and housing.

a. Backnut

b. "O"-ring

c. Spacer

d. Grip ring

e. Backshell

NOTE: Center body will be installed later in this procedure.

Step 3 - Slide the following cable splice assembly parts only onto other end of severed cable in the order indicated below:

a. Backnut

b. "O"-ring

c. Spacer

d. Grip ring

e. Backshell

Step 4 - Mark both outer cable jackets approximately 4 inches (102 mm) from end and strip jackets back to mark using cable stripper. Fold back kevlar strength members and temporarily tape to cable outer jackets.

CAUTION: Do not cut or nick OFCC jackets.

Cut off exposed central member using kevlar shears.

Step 5 - Remove waterblocking material and clean OFCC's using wipe dampened with alcohol and blow dry with air.

Source: https://assist.dla.mil -- Downloaded: 2016-12-31T20:59Z
Check the source to verify that this is the current version before use.

Step 6 - Measure and mark all OFCC jackets approximately 3.5 inches (89 mm) from end. Remove OFCC jackets back to mark using OFCC stripper. Trim kevlar back to OFCC jackets using kevlar shears.

Step 7 - **WARNING:** Wear safety glasses when removing buffers to avoid possible eye injury.

Measure and mark buffers approximately 1.0 inch (25 mm) from ends and remove buffers back to mark using buffer stripper. (NOTE: Remove buffer in small sections (approximately 0.15 inch (4 mm)) at a time.)

Step 8 - Remove fiber coating residue with wipe dampened with alcohol. Wipe one time from end of buffer towards end of fiber.

Step 9 - Proceed to 3.2.2 below.

3.2.2 Installation of ferrules onto fibers.

Step 1 - Separate ferrules by grasping both sides of assembled pair with thumb and index fingers. Simultaneously pull and slightly bend ferrules until they separate. (NOTE: Do not twist ferrules during separation.) Keep ferrules in matched sets according to manufacturer's number designation.

Step 2 - Remove springs and collars by pulling off ferrules.

Step 3 - Cover each ferrule assembly with UV blocking shield if splicing will be performed in direct or bright sunlight or under bright fluorescent lamps.

Step 4 - **WARNING:** Wear safety glasses when dispensing epoxy to avoid possible eye injury.

Install syringe tip on UV adhesive syringe. Purge air pockets by holding tip of syringe upward and dispensing epoxy onto wipe until it runs free and clear.

Source: https://assist.dla.mil -- Downloaded: 2016-12-31T20:59Z
Check the source to verify that this is the current version before use.

Step 5 - Insert tip of syringe into back of ferrule until syringe tip bottoms out and slowly inject adhesive into ferrule until a small bead appears on ferrule tip (see figure 1C1-2). (NOTE: Do not overfill ferrule as this may not allow fiber to be inserted into ferrule hole.) Remove syringe from ferrule and cover with wipe.

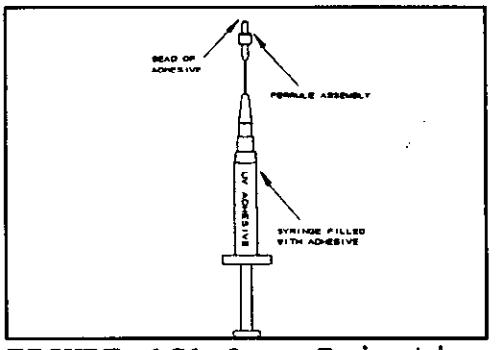

FIGURE 1C1-2. Injecting adhesive into ferrule.

Step 6 - Carefully insert stripped fiber into ferrule until buffer bottoms. Observe adhesive bead on ferrule tip (see figure 1C1-3). If bead is not present, use syringe to form bead. Wipe off any excess adhesive with a wipe dampened with alcohol. Install matched ferrules to same color buffered fiber in each cable half. Repeat steps 5 and 6 above for all fibers.

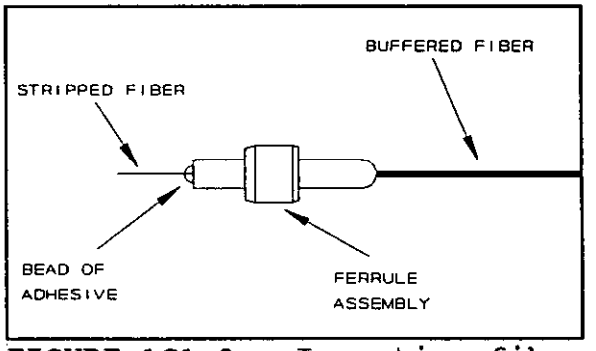

FIGURE 1C1-3. Inserting fiber into ferrule.

Step 7 - Proceed to 3.2.3 below.

3.2.3 Curing adhesive.

Step 1 - Remove UV blocking shield, if used.

Source: https://assist.dla.mil -- Downloaded: 2016-12-31T20:59Z
Check the source to verify that this is the current version before use.

Step 2 - Place prepared ferrules (one at a time) on curing tool base (see figure 1C1-4). Position UV curing lamp over ferrules. (NOTE: Where feasible, tape cable jacket to any available surface during curing period to avoid accidentally pulling ferrules from curing lamp.)

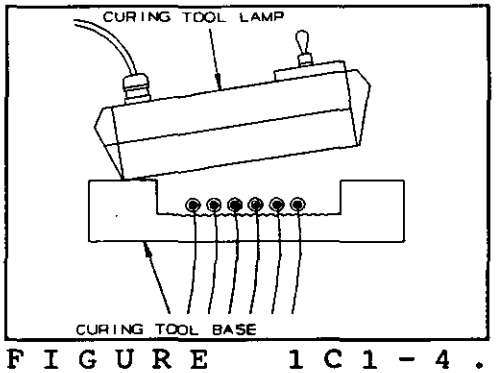

FIGURE 1C1-4. Positioning curing lamp.

Step 3 - **WARNING:** Wear UV safety glasses when using curing lamp to avoid possible eye injury.

Turn on curing lamp and cure ferrules for a minimum of 2 minutes.

Step 4 - Turn off curing lamp and lift off curing tool base. Remove cured ferrules from curing tool base.

Step 5 - **WARNING:** Wear safety glasses when scoring fiber to avoid possible eye injury.

Score fiber close to terminus tip and at epoxy bead using one short light stroke with cleaving tool (see figure 1C1-5). (NOTE: Do not break fiber with cleaving tool.) Pull off fiber with a gentle straight pull.

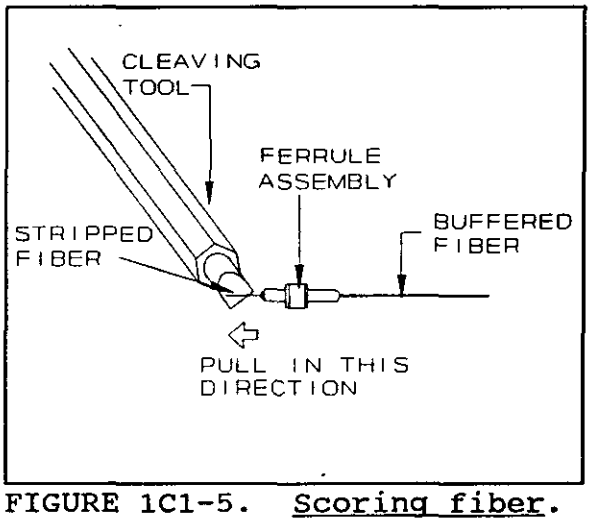

FIGURE 1C1-5. Scoring fiber.

Source: https://assist.dla.mil -- Downloaded: 2016-12-31T20:59Z
Check the source to verify that this is the current version before use.

Step 6 - Remove any adhesive on the cylindrical surface of the ferrule using a utility knife by moving the knife from back to front of ferrule using light force and a shallow working angle (see figure 1C1-6). (NOTE: Be careful not to scratch ferrule end.)

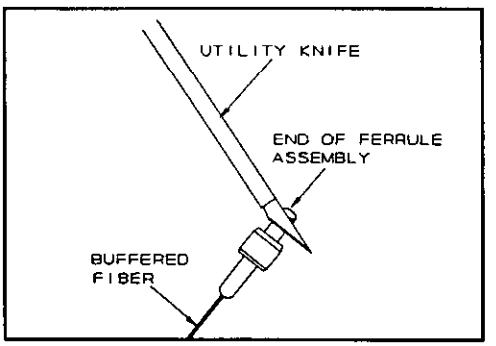

FIGURE 1C1-6. Removing excess adhesive.

Step 7 - Proceed to 3.2.4 below.

3.2.4 Polishing fiber ends. Hand polishing is the preferred method of polishing ferrules. Procedures for hand polishing are contained herein. Machine polishing may be used as an alternate method, provided the following requirements are satisfied:

a. Manufacturer's instructions will be rigidly adhered to, except that the polishing papers or disks shall be 8 μm and 1 μm, as used in hand polishing.

b. The machine polished ferrule shall undergo the same quality check used for the hand polished ferrule as described herein.

Step 1 - Clean glass polishing plate, backs of polishing papers, surface of polishing tool and ferrules using wipe dampened with alcohol. Blow all surfaces dry with air.

Step 2 - Insert ferrule into polishing tool.

Step 3 - Place sheet of 8 μm polishing paper onto glass plate and start polishing ferrule with very light pressure (the weight of the tool) using figure-8 motions. Polish until adhesive bead is gone and ferrule surface is unmarked. Since polishing time varies with size of adhesive bead, inspect ferrule tip frequently. Whenever polishing tool is lifted, remove grit from tool and ferrule with air.

Step 4 - When polishing is complete, remove ferrule from polishing tool, clean both with wipe dampened with alcohol and blow dry with air. Replace ferrule in polishing tool.

Source: https://assist.dla.mil -- Downloaded: 2016-12-31T20:59Z
Check the source to verify that this is the current version before use.

Step 5 - Replace 8 μm polishing paper with 1 μm polishing paper. Wet one quarter of paper and start polishing with very light pressure (the weight of the tool) using figure-8 motions, rotating the ferrule 90 degrees periodically during procedure. (NOTE: Start and finish should be on the same area of paper so as to gradually wear away and reduce grit for a finer polish.) Inspect ferrule tip frequently using eye loupe and cease polishing when adhesive is all gone and there is no evidence of scratches or other defects.

NOTE: Do not over polish; 10 to 30 figure-8's should be adequate.

Step 6 - Remove ferrule from tool and clean both with wipe dampened with alcohol and blow dry with air. Repeat above steps for all ferrules.

Step 7 - Proceed to 3.2.5 below.

3.2.5 Quality check.

Step 1 - Examine ferrule with eye loupe to ensure optical surface is flat and free of scratches, pits, chips, and fractures (see figure 1C1-7). If defects are present, repeat polishing procedure or reterminate. (NOTE: A high intensity back light may be used to further illuminate fiber.)

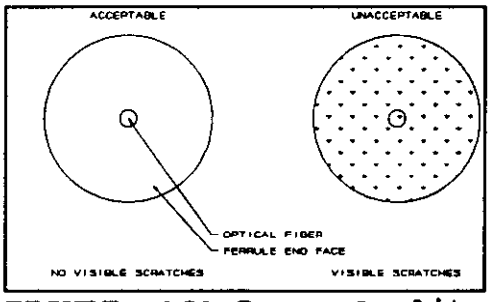

FIGURE 1C1-7. Quality check.

Step 2 - Proceed to 3.2.6 below.

3.2.6. Splice assembly.

Step 1 - Insert ferrules into small holes of each splice nest half and slide each half onto its respective cable.

Step 2 - Mix index matching gel according to manufacturer's instructions provided, except do not vacuum.

Source: https://assist.dla.mil -- Downloaded: 2016-12-31T20:59Z
Check the source to verify that this is the current version before use.

Step 3 - Adjust splice alignment clip tool and insert tool tip into alignment sleeve slot.

CAUTION: Opening sleeve too much may damage sleeve.

Open sleeve just enough to insert ferrule tip (see figure 1C1-8).

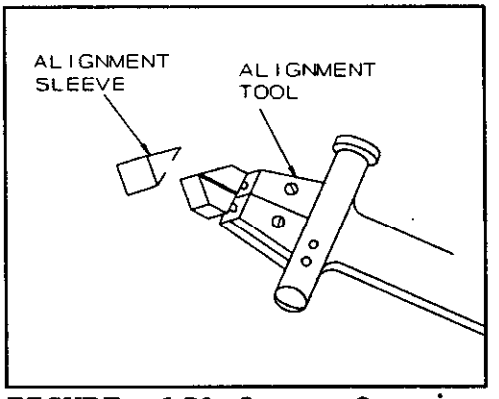

FIGURE 1C1-8. Opening alignment sleeve.

NOTE: Position alignment clip so slot faces away from center and corresponds to triangular cut out in splice nest.

Step 4 - Clean one index matching gel cap with a wipe dampened with alcohol and pour some gel into cap. Dip one polished ferrule tip into gel and slide ferrule into alignment sleeve until tip is approximately centered in sleeve (see figure 1C1-9).

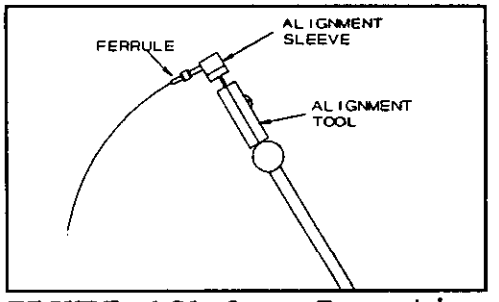

FIGURE 1C1-9. Inserting ferrule into alignment sleeve.

Step 5 - Dip other ferrule tip into index matching gel and slide ferrule tip into other side of alignment sleeve. Ensure ferrule tips are centered in sleeve and alignment tabs are facing sleeve gap (see figure 1C1-10). Remove spring clip tool from alignment sleeve. Verify ferrule tips make contact by pushing both halves together.

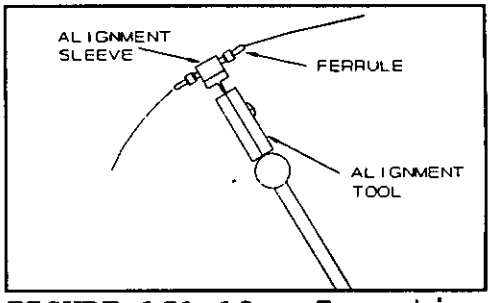

FIGURE 1C1-10. Inserting second ferrule into alignment sleeve.

Source: https://assist.dla.mil -- Downloaded: 2016-12-31T20:59Z
Check the source to verify that this is the current version before use.

3.2.7 Splice alignment.

NOTE: Passive alignment should be sufficient for most applications. Active alignment shall only be performed when specified. Proceed to step 1 below for passive alignment. Proceed to step 4 below for active alignment.

Step 1 - Passive alignment- Verify tab alignment by inserting splice assembly into splice alignment tool making sure tabs fit into tool slots (see figure 1C1-11). If necessary, rotate either ferrule slightly to align tabs. Remove splice from tool.

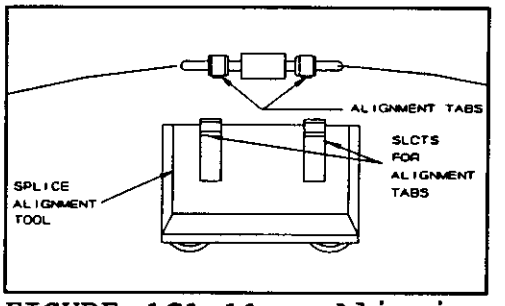

FIGURE 1C1-11. Aligning tabs.

Step 2 - Repeat 3.2.6 and 3.2.7 above for all ferrules.

Step 3 - Proceed to 3.2.8 below.

Step 4 - Active alignment- **WARNING:** Do not look into the end of a fiber connected to an LED or laser diode. Light may not be visible but can still damage the eye.

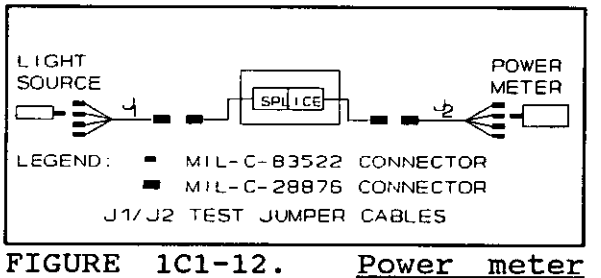

FIGURE 1C1-12. Power meter cable hookup - (typical).

Using appropriate test adapters or test jumper cables in accordance with table 6C1-III in Part 6 of this standard, connect ends opposite splice ferrules of cable under test to light source and power meter and energize both (see figure 1C1-12).

Step 5 - Rotate ferrules relative to each other until maximum power is recorded at power meter.

Step 6 - Repeat 3.2.6 and 3.2.7 above for all ferrules, then deenergize light source and power meter.

Step 7 - Proceed to 3.2.8 below.

Source: https://assist.dla.mil -- Downloaded: 2016-12-31T20:59Z
Check the source to verify that this is the current version before use.

3.2.8 Installing splice assemblies and assembly of cable splice housing.

Step 1 - Slide splice nest forward and seat splice assemblies with split in alignment sleeve facing toward the outside.

Step 2 - Slide center body and both backshells together and tighten both coupling nuts.

Step 3 - Remove tapes holding kevlar, slide grip rings forward, then draw kevlar back over grip rings and tape to cables.

Step 4 - Slide spacers forward over kevlar. Draw kevlar forward over spacers. Lubricate "O"-rings and slide forward, trapping kevlar between "O"-rings and spacers. Trim off excess kevlar using shears.

Step 5 - Slide backnuts forward and tighten both to 55 inch-pounds using spanner wrench and torque wrench.

Step 6 - Perform cable assembly link loss test of Method 6C1 in Part 6 of this standard.

Source: https://assist.dla.mil -- Downloaded: 2016-12-31T20:59Z
Check the source to verify that this is the current version before use.

STANDARDIZATION DOCUMENT IMPROVEMENT PROPOSAL

INSTRUCTIONS

1. The preparing activity must complete blocks 1, 2, 3, and 8. In block 1, both the document number and revision letter should be given.
2. The submitter of this form must complete blocks 4, 5, 6, and 7.
3. The preparing activity must provide a reply within 30 days from receipt of the form.

NOTE: This form may not be used to request copies of documents, nor to request waivers, or clarification of requirements on current contracts. Comments submitted on this form do not constitute or imply authorization to waive any portion of the referenced document(s) or to amend contractual requirements.

I RECOMMEND A CHANGE:

1. DOCUMENT NUMBER: MIL-STD-2042-1(SH)
2. DOCUMENT DATE (YYMMDD): 930707
3. DOCUMENT TITLE: FIBER OPTIC TOPOLOGY INSTALLATION STANDARD METHOD FOR NAVAL SHIPS
4. NATURE OF CHANGE (Identify paragraph number and include proposed rewrite, if possible. Attach extra sheets as needed.)

5. REASON FOR RECOMMENDATION

6. SUBMITTER

a. NAME (Last, First, Middle Initial)

b. ORGANIZATION

c. ADDRESS (Include Zip Code)

d. TELEPHONE (Include Area Code)
(1) Commercial
(2) AUTOVON (If applicable)

7. DATE SUBMITTED (YYMMDD)

8. PREPARING ACTIVITY

a. NAME TECHNICAL POINT OF CONTACT:
Mr. Charles Courchaine

b. TELEPHONE (Include Area Code)
(1) Commercial: 703-602-3221
(2) AUTOVON: 332-3221

c. ADDRESS (Include Zip Code)
Commander, SEA 03Q42
Naval Sea Systems Command
2531 Jefferson Davis Hwy
Arlington, VA 22242-5160

IF YOU DO NOT RECEIVE A REPLY WITHIN 45 DAYS, CONTACT:
Defense Quality and Standardization Office
5203 Leesburg Pike, Suite 1403, Falls Church, VA 22041-3466
Telephone (703) 756-2340 AUTOVON 289-2340

Source: https://assist.dla.mil -- Downloaded: 2016-12-31T20:59Z
Check the source to verify that this is the current version before use.