[INCH - POUND]

PPP-B-00636L
(GSA-FSS)
JANUARY 1, 1991
SUPERSEDING
PPP-B-00636K
AUGUST 3, 1990

INTERIM FEDERAL SPECIFICATION

BOXES, SHIPPING, FIBERBOARD

This interim Federal specification was developed by the General services administration, Federal Supply Service, New York, NY 10278, based on currently available technical information. It is recommended that federal agencies use it in procurement and forward recommendations for changes to the preparing activity at the address shown above.

The General Services Administration has authorized the use of this interim Federal specification as a valid exception to PPP-B-636J, dated July 12, 1981.

1. SCOPE AND CLASSIFICATION

1.1 Scope. This specification covers the fabrication of new fiberboard boxes, liners, and sleeves and requirements for assembly, use, water-proofing, fire retarding, closure, and reinforcing of the packed boxes as applicable (see appendix).

1.2 Classification.

1.2.1 Types, classes, varieties, and grades. Fiberboard boxes covered by this specification shall be of the following types, classes, varieties, and grades, as specified (see 6.2):

Type CF - (Corrugated fiberboard).

Class - Weather-resistant
Variety SW - (single wall).
Grades V3c, W5c, and W6c (See table II)
Variety DW - (double wall).
Grades V11c, V13c, and V15c (See table II)

Class - Weather-resistant/fire retardant
Variety SW - (single wall).
Grades V3cFR, W5cFR, and W6cFR (See table II)
Variety DW - (double wall).
Grades V11cFR, V13cFR, and V15cFR (See table II)

DISTRIBUTION STATEMENT A: Approved for public release; distribution is unlimited

FSC 8115

Source: https://assist.dla.mil -- Downloaded: 2016-12-11T10:55Z
Check the source to verify that this is the current version before use.

Class - Waterproof and water vapor resistant (WWVR).
Variety SW - (single wall).
Grades V3cWWVR, and W5cWWVR.(See table II)
Variety DW - (double wall).
Grades V11cWWVR, and V13cWWVR.(See table II)

Class - Domestic.
Variety SW - (single wall).
Grades 125, 175, 200, 275, and 350.(See table I)
Variety DW - (double wall).
Grades 200, 275, 350, 500, and 600.(See table I)

Class - Domestic/fire retardant.
Variety SW - (single wall).
Grades 125FR, 175FR, 200FR, 275FR, and 350FR.(See table I)
Variety DW - (double wall).
Grades 200FR, 275FR, 350FR, 500FR, and 600FR.(See table I)

Type SF - (Solid fiberboard).

Class - Weather-resistant.
Grades V2s, V3s, V4s, W5s, and W6s. (See table II)
Class - Domestic.
Grades 125, 175, 200, 275, 350, 500, and 600 (See table I).
Class - Weather-resistant/fire retardant.
Grades V2sFR, V3sFR, V4sFR, W5sFR, and W6sFR. (See table II)
Class - Domestic/Fire retardant.
Grades 125FR, 175FR, 200FR, 275FR, 350FR, 500FR, and 600FR (See table I).

1.2.2 Box and folder styles. Box styles shall be as follows (see 6.2):

RSC	-	Regular slotted container (figure 2) (see note).
OSC	-	Overlap slotted container (figure 3).
FOL	-	Full overlap slotted container (figure 4).
SFF	-	Special full flap slotted container (figure 5).
CSSC	-	Center special slotted container (figure 6).
CSOSC	-	Center special overlap slotted container (figure 6)
HSC	-	Half Slotted container with cover (figure 7)
DBLCC	-	Double cover container (figure 8).
IC	-	Interlocking double cover container (figure 9).
FTC	-	Full telescope container (figure 10).
OPF	-	One piece folder (figure 11).
FPF	-	Five panel folder (figure 12).
TS	-	Triple slide container (type CF only) (figure 13).
TSC	-	Tongue and slot closure (figure 14)

NOTE: When the procurement document fails to specify a box style, style RSC shall be furnished.

Source: https://assist.dla.mil -- Downloaded: 2016-12-11T10:55Z
Check the source to verify that this is the current version before use.

1.2.3 Sleeves. (see 3.2.2.1 and 3.4.1.2) shall be furnished when specified (see 6.2). When a sleeve is required, it shall be designated by the symbol "SL" after the box style designation. Example: RSC-SL.

1.2.4 Liners. Liners (see 3.2.2.2, 3.4.1.3, and 3.4.2.2) shall be furnished when specified (see 6.2). When a liner is required, it shall be designated by the symbol "L" after the box style designation. Example: RSC-L.

2. APPLICABLE DOCUMENTS

2.1 The following documents, of the issues in effect on date of invitation for bids or request for proposal, form a part of this specification to the extent specified herein:

Federal Specifications:

MMM-A-250 - Adhesive, Water-Resistant (for Closure of Fiberboard Boxes).

PPP-B-638 - Boxes, Liners and Sleeves, Fiberboard, Knocked Down Flat; Packing of.

PPP-F-320 - Fiberboard; Corrugated and Solid, Sheet Stock (Container Grade), and Cut shapes.

A-A-1492 - Tape, Gummed, Paper, Plain.

A-A-1671 Tape, Gummed, (Paper, Reinforced, Laminated).

PPP-T-60 - Tape, Packaging, Waterproof.

A-A-1683 - Tape, Pressure-Sensitive Adhesive (Packaging, Paper).

Federal Standard:

Fed. Std. No. 123 - Marking for Shipment (Civil Agencies).

Activities outside the Federal Government may obtain copies of Federal specifications, standards, and commercial item descriptions, as outlined under General Information in the Index of Federal Specifications, Standards, and Commercial Item Descriptions. The Index, which includes cumulative bimonthly supplements, is for sale on a subscription basis by the Superintendent of Documents, U. S. Government Printing Office, Washington, DC 20402.

Source: https://assist.dla.mil -- Downloaded: 2016-12-11T10:55Z
Check the source to verify that this is the current version before use.

Single copies of this specification, other Federal specifications, standards, and commercial item descriptions required by activities outside the Federal Government for bidding purposes are available without charge from General Services Administration Business Service Centers in Boston; New York; Philadelphia; Washington, DC; Atlanta; Chicago; Kansas City, MO; Fort Worth; Houston; Denver; Los Angeles; San Francisco; and Seattle, WA.

Federal Government activities may obtain copies of Federal specifications, standards, commercial Item descriptions, and the Index of Federal Specifications, Standards, and Commercial Item Descriptions from established distribution points in their agencies.

Military Standards:

MIL-STD-105 - Sampling Procedures and Tables for Inspection by Attributes.

(Copies of Military Specifications and Standards required by contractors in connection with specific procurement functions should be obtained from the procuring activity or as directed by the contracting officer. Military Specifications and Standards may also be obtained from Standardization Documents Order Desk, Building 4D, 700 Robbins avenue, Philadelphia PA. 19111-5094).

Laws and Regulations:

21 CFR 121 - Federal Food, Drug and Cosmetic Act and Regulations Promulgated Thereunder.

(The Code of Federal Regulations (CFR) and the Federal Register (FR) are for sale on a subscription basis by the Superintendent of Documents, US Government Printing Office, Washington, DC 20402. When indicated, reprints of certain regulations may be obtained from the Federal agency responsible for issuance thereof.)

2.2 Other publications. The following documents form a part of this specification to the extent specified herein. Unless a specific issue is identified, the issue in effect on date of invitation for bids or request for proposal shall apply.

National Motor Freight Traffic Association, Inc., Agent:

National Motor Freight Classification.

(Application for copies should be addressed to the American Trucking Association, Inc., Traffic Department, 1616 P Street, N.W., Washington, DC 20036.)

Source: https://assist.dla.mil -- Downloaded: 2016-12-11T10:55Z
Check the source to verify that this is the current version before use.

Uniform Classification Committee, Agent:

Uniform Freight Classification.

(Application for copies should be addressed to the Uniform Classification Committee, Room 1106, 222 South Riverside Plaza, Chicago, IL 60606.)

3. REQUIREMENTS

3.1 Material.

3.1.1 Fiberboard. Unless otherwise specified, the fiberboard shall conform to type, class, variety, and grade of PPP-F-320 for the applicable type, class, variety, grade, and style box specified (see 6.2) with flute requirements as specified in 3.4.1 and 3.4.2.

3.1.2 Metal fasteners. Metal fasteners shall be commercially preformed staples or staples formed from commercial steel stitching wire. All staples shall have a commercially applied coating of zinc or copper wash. The staples shall be one of the sizes specified in 3.1.2.1 or 3.1.2.2. Commercial tolerances shall apply. Fasteners for the manufacturer's joint and closures shall be as specified.

3.1.2.1 Flat staples. Flat staples shall be one of the following sizes:

(a) 0.103 inch wide by 0.020 inch thick and crown length of 3/8 inch to 5/8 inch.
(b) 0.103 inch wide by 0.023 inch thick and crown length of 1-1/4 inches +/- 1/8 inch.
(c) 0.103 inch wide by 0.028 inch thick and crown length of 1-1/4 inches +/- 1/8 inch.
(d) 0.074 inch wide by 0.037 inch thick and crown length of 1-1/4 inches +/- 1/8 inch.
(e) 0.103 inch wide by 0.017 inch thick and crown length of 1/2 inch ± 1/8 inch.
(f) 0.103 inch wide by 0.023 inch thick and crown length of 1/2 inch ± 1/8 inch.
(g) 0.103 inch wide by 0.028 inch thick and crown length of 1/2 inch ± 1/8 inch.
(h) 0.092 inch wide by 0.037 inch thick and crown length of 1-1/4 inches ± 1/8 inch.

3.1.2.2 Arcuate staples. Arcuate staples are arced and shall be of the following sizes:

(a) 0.103 inch wide by 0.017 inch thick prior to forming to 0.090 inch wide by 0.024 inch thick with a crown length of 1/2 inch ± 1/8 inch.

Source: https://assist.dla.mil -- Downloaded: 2016-12-11T10:55Z
Check the source to verify that this is the current version before use.

(b) 0.095 inch wide by 0.027 inch thick and crown length of 1 inch +/- 1/8 inch.
(c) 0.103 inch wide by 0.020 inch thick prior to forming to 0.090 inch wide by 0.027 inch thick with a crown length of 1-1/4 Inches ± 1/8 inch.
(d) 0.103 inch wide by 0.014 inch thick: prior to forming to 0.090 inch wide by 0.024 inch thick with a crown length of 1/2 inch ± 1/8 inch.
(e) 0.103 inch wide by 0.020 inch thick prior to forming to 0.090 inch wide by 0.024 inch thick with a crown length of 1/2 inch ± 1/8 inch.

3.1.3 Adhesive. Adhesive shall conform to MMM-A-250 and as specified hereinafter (see 3.4.1.1.1, 3.4.2.1.1, 3.4.2.1.3, and 30.3.1.1). When boxes are used for packaging or packing food and the adhesive used may contact or be in proximity to the food, the adhesive shall comply with the Federal Food, Drug and Cosmetic Act and regulations promulgated thereunder.

3.2 Design. Boxes shall be designed for type, class, variety and grade to meet the shipping conditions of tables I and II and styles specified herein (see 1.2.2 and 3.2.1).

TABLE I. Size and weight limitations for types CF and SF, class domestic and domestic/fire retardant fiberboard boxes 2/

Type CF Variety SW Grade	Type CF Variety DW Grade	Type SF Grade	Normal requirements 1/ Maximum weight of box and contents (lbs)	Normal requirements 1/ Maximum inside dimensions L + W + D (inches)	Special Requirements 1/ Maximum weight of box and contents (lbs)	Special Requirements 1/ Maximum inside dimensions L + W + D (inches)
125		125	20	40		
175		175	40	60	20	60
200	200	200	65	75	45	75
275	275	275	90	90	65	90
350	350	350	120	100	90	100
	500	500	160	120	120	110
	600	600	180	120	140	120

1/ See 6.1.1.1 and 6.1.1.2.
2/ Size and weight limitations may be modified or waived by the ordering activity as necessary, when boxes are used for nonshipper or special purposes (see 6.1.2 and 6.4).

Source: https://assist.dla.mil -- Downloaded: 2016-12-11T10:55Z
Check the source to verify that this is the current version before use.

TABLE; II. Size and weight limitations for class weather-resistant and weather-resistant/fire retardant and WWVR fiberboard boxes used as exterior containers 1/ 5/

	Normal Requirements 2/		Special Requirements 2/		
	Maximum weight of box and contents	Maximum inside dimensions 6/	Maximum weight of box and contents		Maximum inside dimensions 6/
Grade (compliance symbol)	Type 1 & 2 loads 3/ (lbs)	Type 1 & 2 loads 3/ (inches)	Type 1 load 3/ (lbs)	Type 2 load 3/ (lbs)	Type 1&2 loads 3/ (inches)
V2s	120	100	80	65	80
V3s, V4s & V3c	90	90	75	45	75
W5s & W5c	65	75	50	40	50
W6s & W6c	30	30	25	25	30
V11c	160 4/	120	160	160	120
V13c	120	100	120	120	100
V15c	90	90	90	90	90

1/ Not applicable to interior nonshipper boxes (see 6.1.2).
2/ See 6.1.1.1 and 6.1.1.2.
3/ See 10.2.2 for designation of load types.
4/ Maximum weight may be increased to 225 lbs provided the manufacturer's body joint is fastened with either flat staples, specified in 3.1.2.1(b) or (f), or arcuate staples specified in 3.1.2.2(c) or (e) spaced not more than 1 inch apart (see 6.2).
5/ For hazard
ous materials regulated by the US Department of Transportation, see 6.4.
6/ Dimensions include length, width and depth.

NOTE: The gross weight and size limit expressed in the circular or rectangular boxmaker's certificate shall conform to the requirements of the Uniform Freight Classification or National Motor Freight Classification Rules, as applicable, and may not be the same as those stipulated in table II.

Source: https://assist.dla.mil -- Downloaded: 2016-12-11T10:55Z
Check the source to verify that this is the current version before use.

3.2.1 Style. The style of box or folder shall be as specified (see 1.2.2 and 6.2). The location of the openings shall be determined by the specified dimensions, which shall always be furnished in the order of length, width, and depth (see 3.3, 10.2.1, and figures 1 and 2).

3.2.1.1 Regular slotted (RSC). This box shall be in accordance with figure 2. The box shall be scored and slotted to form a body piece having four flaps for closing each of two opposite faces. The flaps along the longer edge of the box openings are the outer flaps and those along the shorter edge are the inner flaps. Flaps shall not project beyond an edge of the box. All flaps shall be of equal length, and the outer flaps shall meet when closed.

3.2.1.2 Overlap slotted (OSC). This box shall be in accordance with figure 3. The box shall be scored and slotted to form a body piece having four flaps for closing each of two opposite faces. When closed, the inner flaps shall not overlap and the outer flaps shall overlap the distance specified (see 6.2). Inner flaps shall be the same length as the outer flaps, except where the relation of width to length would cause the inner flaps to overlap, in which case, the inner flaps shall be cut so that, when in closed position, they shall meet.

3.2.1.3 Full overlap slotted (FOL). This box shall be in accordance with figure 4. The box shall be constructed in accordance with 3.2.1.2, except that the length of the outer flaps, when measured from the outer edge of the flap to the center line of the score, shall be not less than the inside width of the box minus 1 inch.

3.2.1.4 Special full flap slotted (SFF). This box shall be in accordance with figure 5. The box shall be constructed in accordance with 3.2.1.2, except that the length of the inner flaps in the closed position shall be such that they meet in the center of the box but do not overlap. A gap not to exceed 1/4 inch will be permitted.

3.2.1.5 Center special slotted (CSSC). This box shall be in accordance with figure 6. The box shall be constructed in accordance with 3.2.1.1, except that the length of the inner and outer flaps shall be such that they meet in the center of the box but do not overlap. A gap not to exceed 1/4 inch will be permitted.

Source: https://assist.dla.mil -- Downloaded: 2016-12-11T10:55Z
Check the source to verify that this is the current version before use.

3.2.1.6 Center special overlap slotted (CSOSC) (see figure 6). This box shall be as specified herein. When closed, the inner flaps shall meet in the middle of the face with a gap not to exceed 1/4 inch when in the closed position. Outer flaps shall be the same length as the inner flaps and may overlap (no flap cutting is required). Dimensions of the box shall be such that the outer flaps do not extend beyond the configuration of the box.

3.2.1.7 Half slotted with cover (HSC). This box shall be in accordance with figure 7. The box consists of a box body and a cover. The box body shall be scored, slotted, and stitched to form a tube having four flaps of equal length on the bottom. The outer flaps shall meet when closed. Unless otherwise specified, the cover shall be a type I (see figure 16) stitch locked cover. When specified (see 6.2), the cover shall be a type II (see figure 16). Unless otherwise specified, the cover depth shall be 3 inches (see 6.2). The cover shall be shipped unassembled (flat and unstitched).

3.2.1.8 Double cover (DBLCC). This box shall be in accordance with figure 8. The box consists of a body tube and two covers. The body consists of fiberboard, scored and stitched to form a tube having parallel ends. Unless otherwise specified, the covers shall be type I (see figure 16) stitch lock covers, 3 inches deep. When specified (see 6.2), the cover shall be type II (see figure 16). Unless otherwise specified (see 6.2), the covers shall be shipped unassembled (flat and unstitched).

3.2.1.9 Interlocking double cover (IC). This box shall be in accordance with figure 9. The box consists of a body tube with top and bottom flanges and two interlocking covers. The box body shall be fiberboard (SW or DW) scored, slotted, and stitched to form a tube having double scored short flanges (flaps) which form a lock with the flanges of the cover. The top and bottom covers shall be type III (see figure 16) flange interlock covers and shall be secured by means of horizontal straps. Unless otherwise specified, the flanges shall be 3 inches long for boxes made of variety SW fiberboard and 4 inches long for boxes made of variety DW fiberboard (see 6.2).

Source: https://assist.dla.mil -- Downloaded: 2016-12-11T10:55Z
Check the source to verify that this is the current version before use.

3.2.1.10 Full telescope (FTC). This box shall be in accordance with figure 10. The box consists of a body and a cover, each constructed of one piece of fiberboard, scored and slotted. The box dimensions shall be the inside measurements of the assembled box body. The cover shall be a snug fit on body. When specified, flaps shall be positioned inside the side panels of the body and inside the end panels of the cover or inside the side panels of the body and outside the end panels of the cover (see 6.2(n)). When set up, the flaps shall not overlap but shall be of sufficient length to allow them to be securely fastened to the adjoining walls with not less than five staples applied as illustrated in figure 10. The edge flaps on the body and cover (see figure 10) shall not protrude more than 1/4 inch beyond the edge of the member to which it is secured. Fastening along the free edges shall be not more than 4 inches apart. When specified (see 6.2), the flaps shall be securely glued together with adhesive specified in 3.1.3 covering the full area between the flaps and adjoining side or end. Alternatively, in lieu of metal fasteners, the flaps and adjoining walls shall be die cut to allow them to be fastened securely to the adjoining wall with a snap-together tongue or tuck lock corner without causing the fiberboard to rupture. Unless otherwise specified (see 6.2), the flaps on the body and cover shall be positioned in one of the following combinations, at the option of the supplier:

(1) Flaps outside the side panels of the body and inside the end panels of the cover.
(2) Flaps outside the end panels of the body and inside the side panels of the cover.
(3) For snap-together or tuck lock corner, the flaps shall be outside the end panels of the body and outside the side panel of the cover.

When specified (see 6.2), flaps shall be inside the side panels of the body and outside the end panel of the cover. Unless otherwise specified (see 6.2), the body and cover shall be shipped unassembled (flat & unstitshed).

3.2.1.11 One piece folder (OPF). This folder shall be in accordance with figure 11. The folder shall be constructed of one piece of fiberboard, scored and slotted as indicated in referenced figure. When closed, outer flaps shall meet. Unless otherwise specified, the inner flaps shall be not less than 2 inches long for folders under 18 inches in width and not less than 3 inches long for folders 18 inches and over in width.

3.2.1.12 Five-panel folder (FPF). This folder shall be in accordance with figure 12. The folder shall be scored and slotted as indicated in the referenced figure. When set up, outer flaps shall overlap (full overlap). The tuck flap length shall be equal to the length of the side panel (see figure 12, dimension "D") less 1/4 inch with a tolerance of +/- 1/8 inch.

Source: https://assist.dla.mil -- Downloaded: 2016-12-11T10:55Z
Check the source to verify that this is the current version before use.

3.2.1.13 Triple slide (TS). This box shall be in accordance with figure 13. The box shall be constructed of three pieces of fiberboard scored to provide three tubes which, when assembled, completely cover six faces of the box. The inner tube shall be left open as illustrated; the middle tube shall be taped at the body joint and shall be a sliding fit on the assembled inner tube; the outer tube shall be taped at the body joint and shall be a sliding fit on the assembled inner and middle tubes. The box dimensions shall be the inside dimensions of the inner tube in the sequence of length, width, and depth and shall be as illustrated in the referenced figure. Corrugations shall be at right angles to the scoreline in each tube.

3.2.1.14 Tongue and slot closure (TSC). This box shall be in accordance with figure 14. The box shall be constructed of one piece of fiberboard, scored and slotted as indicated in the referenced figure.

3.2.2 Reinforcements.

3.2.2.1 Sleeves. Sleeves shall be constructed from fiberboard as specified in 3.4.1.2, scored, overlapped, and stitched to form a tube (see figure 15). Alternatively, the location of the body joint shall be in the center of the top or bottom panel, providing the joint does not interfere with the required marking. The sleeve shall fit closely over the top, bottom, and end panels of the box for which it is intended. Space between the sleeve and box shall not exceed 3/16 inch when opposite surfaces of sleeve and box are in direct contact with each other.

3.2.2.2 Liners. Liners shall be constructed from fiberboard as specified in 3.4.1.3 or 3.4.2.2. The liner shall be scored to cover the end and side panels of the box for which it is intended. The flutes of the liner shall be perpendicular to the top of the box (see 50.2.4). Unless otherwise specified (see 6.2), the height of the liner shall be the full inside depth of the box for which it is intended, and the ends of the liner shall abut in the center of a side panel of the box.

Source: https://assist.dla.mil -- Downloaded: 2016-12-11T10:55Z
Check the source to verify that this is the current version before use.

3.3 Dimensions. Box dimensions shall be as specified in the contract or order (see 6.2). The dimensions shall be the inside measurements and shall be cited in the sequence of length, width, and depth (see figures 1 and 2). The length dimension shall be the larger of the two dimensions of the open face of the box or folder; the width dimension shall be the lesser of the two dimensions of the open face of the box or folder; the depth dimension shall be the distance between the inner most surfaces of the box or folder measured perpendicular to the length and width. A tolerance of ± 1/8 inch shall be permitted in each overall dimension of the box. When boxes are ordered complete with sleeves, e.g., RSC-SL, the fit shall be as specified in 3.2.2.1. When boxes are ordered complete with liners, e.g., RSC-L, the liners shall fit snugly inside the box.

3.3.1 Size and weight limits. Unless otherwise specified (see 6.1.2), size and weight limitations of boxes furnished under this specification shall be in accordance with tables I and II. Boxes, folders, sleeves, or liners shall be made from one piece of fiberboard, except that when the length of the box blank (2 lengths plus 2 widths plus manufacturer's joint) exceeds the largest fiberboard sheet length available to the manufacturer, two pieces of fiberboard may be used provided that the manufacturer's joints are placed in opposite corners.

3.4 Construction of boxes, sleeves, and liners.

3.4.1 Type CF and SF, class weather-resistant and weather-resistant/fire retardant and WWVR boxes. Unless otherwise specified (see 6.2), type CF or SF, class weather-resistant and weather-resistant/fire retardant and WWVR boxes shall be of style (see 1.2.2), material (see 3.1.1), design (see 3.2), dimensions (see 3.3), and grade of fiberboard specified in table II for normal requirements. Variety SW fiberboard used to fabricate type CF boxes shall be either B or C flute, at the option of the supplier. Variety DW fiberboard used to fabricate type CF boxes may be any combination of A, B, or C flutes, except BB. Unless otherwise specified (see 6.2), conventional slotted, type CF, variety SW or DW boxes shall have the flutes running perpendicular to the score line of the box opening. When specified (see 6.2), end loading, conventional slotted, type CF, variety SW or DW boxes shall have the flutes running parallel to the score line of the box opening. The flutes in DBLCC and IC boxes shall run the depth of the box perpendicular to the openings.

Source: https://assist.dla.mil -- Downloaded: 2016-12-11T10:55Z
Check the source to verify that this is the current version before use.

3.4.1.1 Manufacturer's joint, class weather-resistant and weather-resistant/fire retardant and WWVR boxes (see figure 1). The manufacturer's joint, or body joint is that edge seam of a box where the ends of the box blank are joined. The joint of type CF and SF boxes shall be a fiberboard overlap not less than 1-1/2 inches wide extending the full inside depth of the box. The joint tab may be an extension of either the end or side panel of the box and shall not extend beyond the top and bottom score lines of the adjoining panel. The joint tab shall be fastened either inside or outside the adjoining panel, and the top and bottom edges of the joint tab shall be not more than 3/16-inch below the top score line or 3/16-inch above the bottom score line of this panel. Except as specified in 3.4.1.1.1, the overlapped joint shall be secured with metal fastenings specified in 3.1.2.1(a) or (f) and 3.1.2.2(a), or (e). The metal fastenings shall be spaced not more than 2 inches apart, center to center, and the distance between the ends of the joint and the nearer end of the fastener shall not exceed 1 inch. An additional stitch or staple (tie stitch) shall be placed 1/4 inch to 3/4 inch from each end of the joint. Tie stitches will not be required provided the joint is fastened with the same total number of fasteners required (including tie stitches) equally spaced on not more than 2-inch centers with the distance between the outer fasteners and the ends of the joint not exceeding 1 inch. The metal fasteners may be applied either diagonally, or horizontally at the option of the supplier. Large boxes (see 3.3.1) may be fabricated with two joints at diagonally opposite corners at the option of the supplier.

3.4.1.1.1 Glued manufacturer's joint. Alternatively, the joint for grades W5c, W6c, and V3c boxes may be secured with adhesive specified in 3.1.3, except the toxicity requirements may be waived when packing items other than food that may contact the adhesive. The adhesive shall cover the full area between the joint tab and the adjoining panel. The adhesive shall extend to all edges of the joint.

3.4.1.1.2 Butted manufacturer's joint. When specified (see 6.2), the joint of W5c, W5s, W6c, or W6s boxes shall be made by butting the panels closely together and securing them with tape. The tape shall be a minimum of 2 inches wide. The tape shall be centered on the joint, extend full length, or within 3/8 inch of full length, and shall adhere over not less than 90 percent of area of contact.

Source: https://assist.dla.mil -- Downloaded: 2016-12-11T10:55Z
Check the source to verify that this is the current version before use.

3.4.1.2 Sleeves for class weather-resistant and weather-resistant/fire retardant and WWVR boxes. Sleeves (see 1.2.3) for class weather-resistant and weather-resistant/fire retardant, and WWVR boxes shall be the design specified in 3.2.2.1 and fabricated from class weather-resistant and weather-resistant /fire retardant and WWVR fiberboard of the same type and grade as the box for which it is intended. Sleeves fabricated from type CF fiberboard shall have the flutes at right angles to the scores. The overlap stitched to form a tube shall be a minimum of 1-1/2 inches wide, and the length shall be the same as the inside dimension of the box panel over which it is to be positioned. The location of the overlap and the position of the stitches shall be as shown on figure 15 (see 3.2.2.1). Stitches shall be metal fastenings specified in 3.1.2.1(a) or (f), or 3.1.2.2(a) or (e). When mechanical limitations make it necessary, sleeves may be constructed with the overlap as an integral part of the end panel, stitched, as specified, to the underside of the adjoining panel, taking care that the edge of the adjoining panel does not project beyond the plane of the end panel. Metal fasteners may be applied diagonally, or horizon-tally at the option of the supplier.

3.4.1.3 Liners for class weather-resistant and weather-resistant/fire retardant and WWVR boxes. Liners (see 1.2.4) for class weather-resistant and weather-resistant/fire retardant and WWVR boxes shall be of the design specified in 3.2.2.2, unless otherwise specified, shall be fabricated from material conforming to PPP-F-320, grade V15c. When specified (see 6.2), material conforming to PPP-F-320, grades W5c, W6c, V3c, or V13c shall be used to fabricate liners. Liners fabricated from type CF, variety SW fiberboard shall be A or C flute, and liners fabricated from type CF, variety DW fiberboard shall be any combination of A,B, or C flutes, except that BB flutes shall not be used. When boxes are ordered complete with liner, the dimensions as stated in the contract or order will be the dimensions of the box. The dimensions of the liner shall be such that the liner shall fit snugly inside the box. When specified, (see 6.2) the liner joint shall be effected by overlapping and fastening with taping or adhesive as specified for type CF box joints in 3.4.2.1.1.

3.4.2 Type CF and SF, class domestic and domestic/fire retardant boxes. Unless otherwise specified, type CF and SF, class domestic boxes shall be of the style (see 1.2.2), material (see 3.1.1), design (see 3.2), dimensions (see3.3), and grade of fiberboard specified in table I for normal requirements. Variety SW fiberboard used to fabricate type CF boxes shall be A, B, or C flute at the option of the supplier. Variety DW fiberboard used to fabricate type CF boxes may be of any combination of A, B, or C flutes, except that they shall not be BB flute (see 6.2). Type CF boxes shall have flute direction as specified in 3.4.1. The manufacturer's joint of the boxes shall be formed and secured in accordance with 3.4.2.1.

Source: https://assist.dla.mil -- Downloaded: 2016-12-11T10:55Z
Check the source to verify that this is the current version before use.

3.4.2.1 Manufacturer's joint, class domestic and domestic/fire retardant boxes. The joint is that seam of a box where the ends of the box blank are joined. The joint of the type CF, variety SW box shall be overlapped or butted. The joint of the type SF box shall be overlapped. The joint of the type CF, variety DW box shall be overlapped, butted, or spliced. The formed joint shall be secured as specified in 3.4.2.1.1, 3.4.2.1.2, 3.4.2.1.3, as applicable. Large boxes (see 3.3.1) may be fabricated with two joints positioned on diagonally opposite corners at the option of the supplier.

3.4.2.1.1 Overlapped joint (joint tab). The joint shall be made with a fiberboard joint tab not less than 1-1/4 inches wide with the length of the overlap equal to the inside depth of the box. The joint tab may be an extension of either the end or side panel of the box. The joint tab shall be fastened either inside or outside the adjoining panel, and the top and bottom edges of the overlap shall be not more than 3/16 inch below the top score line or 3/16 inch above the bottom score line of this panel. The overlapped joint of type CF box shall be fastened with adhesive as specified in 3.1.3, except the toxicity requirement may be waived when packing items other than food that may contact the adhesive; or, with metal fasteners. When adhesive is used it shall be applied so as to cover the full area between the joint tab and the adjoining panel. The adhesive shall substantially extend to all edges of the overlap. The overlapped joint of type SF box shall be fastened with metal fasteners as specified in 3.1.2.1(a), (e), or (f), and 3.1.2.2(a), (d), or (e). Metal fastenings for the type CF and type SF boxes having a depth dimension 18 inches or less shall be spaced not more than 3 inches apart, center to center. Metal fasteners for the type CF and type SF box having a depth dimension greater than 18 inches shall be spaced not more than 2-1/2 inches apart, center to center. The distance between the ends of the joint and the nearer end of the nearest fastener shall not exceed 1 inch. Metal fasteners may be applied diagonally, vertically, or horizontally at the option of the supplier.

3.4.2.1.2 Butted joint (type CF boxes only). The butted joint shall be made by fitting the edges of the panels to be joined closely together and securing them with gummed tape. Tape used to secure the body joint of boxes having a gross weight of 40 lbs or less (grade 125 to 175) shall be that normally used by the industry for this purpose. Tape used to secure the joints of boxes having a gross weight of more than 40 lbs (grades over 175) shall be reinforced with sisal, cloth, glass, rayon, or double strand nylon fibers. The tape shall be not less than 2 inches in width for boxes having a gross weight of 65 lbs or less (grade 200 and below.) and not less than 3 inches in width for boxes having a gross weight over 65 lbs (grade above 200). The tape shall be centered on the joint and shall extend its full length, or within 3/8 inch of full length and shall adhere over not less than 90 % of the entire area of contact with the fiberboard.

Source: https://assist.dla.mil -- Downloaded: 2016-12-11T10:55Z
Check the source to verify that this is the current version before use.

3.4.2.1.3 Spliced joint (type CF, variety DW boxes only). The spliced joint shall be made by removing both the corrugated medium and center facing of one end of the intended joint and splicing the remaining inner and outer facings over the other end of the abutting corrugated fiberboard. The overlap shall extend not less than 1 inch. Both facings shall be secured with adhesive specified in 3.1.3, except the toxicity requirements may be waived when packing items other than food that may contact the adhesive. Both facings shall be securely glued over the total area of the overlap. The adhesive shall extend substantially to all edges of the splice.

3.4.2.2 Liners for class domestic and domestic/fire retardant boxes. Unless otherwise specified (see 6.2), liners shall be constructed of fiberboard material conforming to PPP-F-320, type CF, class domestic, and domestic/fire retardant, variety DW, grade 275. The liners shall be designed as specified in 3.4.1.3. Liners for the class domestic boxes shall be class domestic. Liners for the class domestic/fire retardant boxes shall be class domestic /fire retardant.

3.5 Compliance and certificate markings.

3.5.1 Types CF and SF, class weather-resistant and weather-resistant/fire retardant ,and WWVR boxes. Type CF and SF, class weather-resistant, weather-resistant/fire retardant and WWVR boxes made to comply with this specification shall be imprinted with the following data which will legibly occupy a total area of not more than 36 in^2 nor less than 16 in^2 (see figure 17):

(1) Boxmaker's name or boxmaker's certificate (see note).

(2) Month and year of manufacturing (e.g., "6-91").

(3) Individual grade or identification symbols.

(4) Specification compliance data, specification number, and minimum average bursting strength of_____ psi. The figure to be inserted should be that corresponding to the dry Mullen requirements in PPP-F-320 for the particular grade of board involved (see note).

(5) The National Stock Number (NSN), inside dimensions, and outside cube shall be marked below the specification data on all exterior type boxes procured for the Government as an item of supply. When filled boxes are procured for direct shipment to the Government, the requirements of 30.6 shall apply.

(6) For class weather-resistant/fire retardant boxes, the words "FIRE RETARDANT" shall be marked below the box maker's certificate.

Source: https://assist.dla.mil -- Downloaded: 2016-12-11T10:55Z
Check the source to verify that this is the current version before use.

NOTE: The minimum bursting strength expressed in the circular or rectangular boxmaker's certificate shall conform to the requirements of the Uniform Freight Classification rules and the Nation-al Motor Freight Classification rules, and may not be the same as that stipulated in the line reading "minimum average bursting strength _____ psi" (see (1) and (4) above and figure 17).

The above markings shall be located as follows:

(a) Slotted style boxes. On the outer flap in a corner as close to the score line as practicable.

(b) All other style boxes. In a corner of the top panel as close to the score line as practicable. Unless otherwise specified (see 3.5.3), no other marking shall appear on the box. The boxmaker's certificate does not relieve the supplier of his responsibility for meeting the requirements of this specification.

(c) When the box panel is not large enough to accommodate all of the markings, the markings may cross the score line (see 3.5.2).

3.5.2 Types CF and SF, class domestic and domestic/fire retardant boxes. Each box shall be plainly marked with the appropriate boxmaker's certificate signifying compliance with the Uniform Freight Classification rules and the National Motor Freight Classification Rules, as applicable. The certificate may be located on the box wherever it is customarily placed; however, the preferred location is on the bottom panel or bottom outer flap. The certificate on boxes having a length of less than 10 inches or width of less than 9 inches may be reduced in size but the outside diameter shall not be less than 2 inches. In the event the box panel is too small to accommodate even the reduced certificate of compliance, the certificate will be permitted to cross the score line and cover more than one panel. For class domestic/fire retardant boxes, the words "FIRE RETARDANT" shall be marked below the boxmaker's certification. Unless otherwise specified, boxes will require no further markings (see 3.5.3). When specified (see 6.2), the specification number, dimensions, and cube shall be marked below the boxmaker's certificate. The boxmaker's certification does not relieve the contractor of his responsibility for meeting the requirements specified herein.

3.5.3 Other markings. When the box is to be used to pack a specific product, additional markings as specified in the applicable procurement document shall be marked on the box. When specified (see 3.5.1 and 6.2), additional markings will be as specified in the contract or order.

Source: https://assist.dla.mil -- Downloaded: 2016-12-11T10:55Z
Check the source to verify that this is the current version before use.

3.6 Workmanship. The completed box shall be clean, free of frayed or torn edges, improperly aligned panels, improper scores and slots, and the marking shall be clear and legible. All dimensions of the boxmaker's blank shall be accurately cut, scored, and slotted so that the assembled box parts fit closely without undue binding. No flap shall project beyond an edge of the box by more than 1/8 inch when the box is set up and closed. All metal fasteners, staples, or stitching wire shall be well clinched, flush with or below the interior and exterior surfaces of the corrugated fiberboard joined, and shall be flush or slightly above the surfaces for solid fiberboard.

3.7 Regulatory Requirements.

3.7.1 Post Consumer Requirement. The supplier must certify that the product supplied contains at least 40 % post consumer recovered material (see 6.5).

3.7.2 Fire Retardant Requirement. The use of carcinogenic agents in the manufacture/fabrication of fire retardant fiberboard is prohibited. A carcinogen is defined as a chemical appearing on one or more of the following source documents: Occupational Safety and Health Administration regulated carcinogens list, National Toxicology Program list, International Agency for Research on Cancer lists 1, 2A, or 2B.

4. QUALITY ASSURANCE PROVISIONS

4.1 Responsibility for inspection. Unless otherwise specified in the contract or purchase order, the contractor is responsible for the performance of all inspection requirements as specified herein.

4.1.1 Inspection. Sampling for inspection shall be performed in accordance with MIL-STD-105, except where otherwise indicated.

4.2 Component and material inspection. In accordance with 4.1 above, components and materials shall be inspected and tested in accordance with all the requirements of referenced specifications, drawings, and standards unless otherwise excluded, amended, modified, or qualified in this specification or applicable purchase document.

4.2.1 Testing of components. Testing shall be performed on the components indicated in table III for the applicable characteristics specified therein. The randomly selected sample unit and sample size to be tested shall be as shown in the table.

Source: https://assist.dla.mil -- Downloaded: 2016-12-11T10:55Z
Check the source to verify that this is the current version before use.

4.3 Inspection of the end item.

4.3.1 Examination of the end item. Examination of the end item shall be made in accordance with the classification of defects, inspection levels, and acceptable quality levels (AQL's) set forth below. A random sample of boxes, including sleeves or liners, or both, as applicable, or folders shall be selected from each lot for each style, type, class, variety, and grade offered for acceptance for visual and dimensional characteristics. The lot, for purposes of determining the sample size in accordance with MIL-STD-105, shall be expressed in units of boxes, including sleeves or liners, or both, as applicable, or folders, for examinations under 4.3.1.1 and 4.3.1.2, in units of bundles or pallet loads for examination under 4.3.1.3.

4.3.1.1 Examination of the end item for defects in appearance, construction, and workmanship. The sample unit for examination shall be one complete box, including sleeves, liners, or both, as applicable, or one folder. Defects that require measurements shall be measured to the nearest 1/32 inch.

Source: https://assist.dla.mil -- Downloaded: 2016-12-11T10:55Z
Check the source to verify that this is the current version before use.

TABLE III. TESTING OF COMPONENT AND MATERIALS

Component 2/	Paragraph	Test Method 1/	Individual unit	Results reported to nearest	Sample unit	Sample size
Stitching wire	3.1.2	visual	-	-	2 inches	5 ea.
Thickness	-	-	x	0.001 inch	-	-
Width	-	-	x	0.001 inch	-	-
Metal fasteners	3.1.2	visual	-	-	1 staple	5 ea.
Thickness	-	-	x	0.001 inch	-	-
Width	-	-	x	0.001 inch	-	-
Crown width	-	-	x	0.001 inch	-	-

1/ Determination shall be made by use of a properly calibrated micrometer of a suitable type (see figure 18).
2/ Failure of more than one unit to meet the applicable requirements shall be cause for rejection.

Source: https://assist.dla.mil -- Downloaded: 2016-12-11T10:55Z
Check the source to verify that this is the current version before use.

Examine	Defects
Condition (boxes, folders, sleeves and liners)	Tear, split or puncture (affecting serviceability) Unduly dirty, stained, or scuffed. Unduly ragged, uneven, or crushed edges.
	NOTE: Defect of crushed edge shall not apply to area of manufacturer's joint.
Scoring (boxes, folders, sleeves and liners)	Outer component ply or facing split sufficiently to materially affect serviceability when folded in normal manner during assembly of box, folder, sleeve or liner.
Condition of metal fastenings (staples or stitching wire)	One or more required fastenings not completely within overlap area; does not pass completely through all pieces to be fastened; not well clinched; visibly cracked or rusted.
Tie stitches	Tie stitches, when used, not placed within 1/4 to 3/4 inch from each end of joint.
	NOTE: Tie stitches not required under conditions outlined in 3.4.1.1.

Weather-resistant, Weather-resistance/fire retardant, WWVR, domestic, and domestic/fire retardent boxes

Spacing and number of fastenings per joint	Not as specified in 3.4.1.1 and 3.4.2.1.1. Spacing not as specified resulting in fewer fastenings than required. Fastenings not well clinched. Overlap less than 1-1/2 inches wide. Highest point at end of joints are more than 3/16 inch below the score line or above the score line of the adjoining panel. Overlap is not straight, affecting dimensions of boxes or overall fit of sleeve or liner.

Source: https://assist.dla.mil -- Downloaded: 2016-12-11T10:55Z
Check the source to verify that this is the current version before use.

Examine	Defects
Domestic and domestic/ fire retardant class boxes	
Overlapped joint tab	Overlap less than 1-1/4 inches wide. Not secured as specified.
Butt joint (type CF boxes only)	Edges do not meet, allowing space opening of more than 1/8 inch plus thickness of board. Tape not adhered to at least 90 percent of area of contact with board. (Examine visually, tear apart if in doubt). Tape not well centered; center line of tape more than 1/4 inch from center line of joint. Tape more than 3/8 inch shorter than the body joint and not evenly applied.
Spliced joint (variety DW box only)	Inner or outer facings overlap the adjacent corrugated fiberboard by less than 1 inch.
Sleeve only	Overlap does not lie flush against adjacent panel without flare. When overlap is an integral part of an end panel, free edge of adjacent panel projects more than 1/8 inch beyond panel of end panel. Nearest edge of fasteners located less than 3/8 inch or more than 5/8 inch from free edge of joint. Fastenings not located in accordance with figure 15 and not well clinched.
Liners	If tape is specified, tape does not form a bond over at least 90 percent of area of contact (Examine visually, tear apart if in doubt). Ends do not meet, allowing space opening of more than 1/8 inch plus thickness of the fiberboard. Tape, not well centered, center line 1/4 inch from center line of joint. Tape fails to extend three quarters of the length of Joint.

Source: https://assist.dla.mil -- Downloaded: 2016-12-11T10:55Z
Check the source to verify that this is the current version before use.

Examine	Defects
Styles RSC, OSC, FOL, SFF, and CSSC boxes	Flaps project beyond edges of assembled box by more than 1/8 inch.

4.3.1.2 Examination of the end item for overall type of defects. The sample unit for this examination shall be one complete box, including sleeve or liner, or both, as applicable, or one folder. Defects that require measurements shall be measured to the nearest 1/32 inch. Measurement of box, folder, liner, and sleeve shall be made from score line to score line.

Examine	Defects
Boxes, folders, sleeves and liners	
Type of board	Not the variety SW or DW of type CF construction, as specified.
Condition of board	Not new.
Scoring and slotting	Poor scoring or slotting. Does not set up properly.
Boxes and folders, styles	Not style specified; not constructed in accordance with the applicable figure (see 3.2.1). Styles RSC, OSC, FOL, SFF, CSSC, CSOSC, and TSC fabricated from more than one piece of fiberboard (except as specified in 3.3.1); joint not along one edge of the four edges, perpendicular to the open face.
Style RSC and HSC, OPF, FPF	Direction of flutes not as required. Styles OPF and FPF fabricated from more than one piece of fiberboard. Inner and outer flaps of RSC, HSC, or OPF not of equal length. When closed, inner or outer flaps overlap. Outer flaps do not completely meet, leaving an opening greater than 1/4 inch between flap ends.
Style OSC	When closed, inner flaps overlap; outer flaps do not overlap the distance specified.

Source: https://assist.dla.mil -- Downloaded: 2016-12-11T10:55Z
Check the source to verify that this is the current version before use.

Examine	Defects
Style FOL	Length of outer flaps extend beyond configiration of box less than the inside width of the box by more than 1 inch.
Style SFF	When closed, inner flaps fail to meet by more than 1/4 inch. Length of outer flaps less than inside width of box by more than 1 inch.
Style CSSC	When closed, inner or outer flaps overlap or do not completely meet, leaving an opening greater than 1/4 inch between flap ends.
Style CSOSC	All flaps not of equal length. When closed, inner flaps fail to meet, leaving an opening greater than 1/4 inch between flap ends. Outer flaps extend beyond configuration of box.
Style DBLCC	Cover type and depth not as specified. Ends not parallel.
Style IC	Body made from more than one piece of fiberboard. Flaps not double scored. Flanges less than 3 inches for SW and less than 4 inches for DW. Cover type and depth not as specified.
Style FTC	Body or cover not one piece of slotted and scored fiberboard. Flaps not positioned as specified (see figure 10). Body slotting not at right angles to cover slotting. Inside depth of cover varies by more than +/- 1/4 inch from the overall outside depth of body. When assembled, flaps of body or cover, or both, overlap. Cover not snug fit over entire area of body. Tucks or flaps not fully engaged.

Source: https://assist.dla.mil -- Downloaded: 2016-12-11T10:55Z
Check the source to verify that this is the current version before use.

Examine	Defects
Style OPF	When closed, outer flaps overlap or do not meet, leaving an opening greater than 1/4 inch between flap ends.
Folders less than 18 inches wide	Length of inner flaps less than 2 inches.
Folders 18 inches and over in width	Length of inner flaps less than 3 inches.
Style FPF	When closed, outer end flaps do not fully overlap each other. Length of outer flaps not as specified. Tuck flaps not as specified.
Style TS	Does not consist of three tubes, each fabricated from a single piece of fiberboard. Corrugations not at right angles to score lines in all parts of tubes. Inner tube joint not left open. Spacing between any of the assembled panel tubes does not permit a sliding fit.
Sleeves	Not fabricated from one piece of fiberboard of the same grade and type of box material. Not scored to form a tube. Not snug fit to box for which it is intended. Space between sleeve and box exceeds 3/16 inch when opposite surfaces of the sleeve and box are in direct contact with each other. Length of sleeve (length of staple joint) not equal to inside width of box or exceeds the outside box width. Joint overlap not as specified (see 3.4.1.2 and figure 15). Direction of corrugations not as specified.

Source: https://assist.dla.mil -- Downloaded: 2016-12-11T10:55Z
Check the source to verify that this is the current version before use.

Examine	Defects
Liners	Not fabricated of one piece of type CF fiberboard. Material not as specified; corrugations not perpendicular to box openings. Not of proper fit inside of box. Ends do not abut at center of side panel (unless otherwise specified). Ends not taped, when specified, with a minimum 2-inch wide kraft tape and centered on the joint (see 3.4.1.3). Depth less than inside depth dimension of the box by more than 1/4 inch or extends above top edge of box.
Manufacturer's joints	
Class domestic and domestic/fire retardant	Type CF box joint not either overlapped, butted, or spliced.
Overlapped joints	Not secured by means of staples, stitching wire, glue, or adhesive. Type SF box not overlapped joint, not secured by metal fasteners.
Butted joints (type CF only)	Not secured by means of gummed tape. Tape less than 2 inches wide for gross weights up to and including 65 lbs. Tape less than 3 inches wide for gross weights over 65 lbs. Not reinforced paper tape for gross weights over 40 lbs.
Spliced Joint (Variety DW only)	Corrugated medium and center facing not removed from one end at the joint (see 3.4.2.1.3). Not as specified by procuring activity. Inner and outer facings of board not overlapped and securely glued. Applied to variety SW Fiberboard.

Source: https://assist.dla.mil -- Downloaded: 2016-12-11T10:55Z
Check the source to verify that this is the current version before use.

Examine	Defects
Class weather-resistant and weather-resistant/fire retardant and WWVR (boxes & sleeves)	Not overlapped Joint. Metal fastenings not coated or plated.
Marking	Missing, illegible, incomplete, or incorrect, or not in accordance with 3.5. Markings not positioned as specified; not of proper size (check visually, measure if in doubt).
Dimensions	Length, width, or depth varies by more than +/- 1/8 inch from size specified, or from nominal requirements of the contract.

4.3.1.3 Examination of preparation for delivery. An examination shall be made to determine that packing, palletization, and markings comply with the requirements of section 5. The sample unit for this examination shall be one shipping container, bundle, or palletized load prepared for delivery. Defects for shipping containers and bundles shall be scored in accordance with PPP-B-638. Defects for palletized loads shall be scored as follows:

Examine	Defects
Finished dimensions	Length, width or height exceeds specified maximum requirement.
Palletization	Pallet pattern not as specified. Load not banded with the number of straps specified. Straps loose.
Weight	Exceeds maximum limits.
Marking	Omitted; incorrect; illegible; of improper size, location, sequence, or method of application.

Source: https://assist.dla.mil -- Downloaded: 2016-12-11T10:55Z
Check the source to verify that this is the current version before use.

4.3.1.4 Inspection levels and acceptable quality levels (AQL's) for examination. The inspection levels, for determining the sample size, and the AQL's, expressed in defects per 100 units, shall be as follows:

Examination paragraph	Inspection levels	AQL
4.3.1.1	S - 4	10.0
4.3.1.2	S - 1	10.0
4.3.1.3	S - 1	4.0

5. PREPARATION FOR DELIVERY

5.1 Packing. Packing shall be level A, B, or commercial, as specified (see 6.2).

5.1.1 Level A. Packing shall be in accordance with the level A packing requirements of PPP-B-638.

5.1.2 Level B. Packing shall be in accordance with the level B packing requirements of PPP-B-638.

5.1.3 Commercial. The boxes shall be packed in accordance with normal commercial practice. The complete pack shall be designed to protect the boxes from damage during shipment, handling and storage, insure delivery at destination, provide for redistribution by the initial receiving activity and be acceptable by common carrier under the National Motor Freight Classification and Uniform Freight Classification.

5.2 Palletization. When specified (see 6.2), boxes, folders, covers, liners, or sleeves shall be palletized. Each load shall be banded with primary and secondary straps. Loads shall interlock by reversing the pattern of each course. The pallet pattern used shall first be approved by the contracting officer.

5.3 Marking.

5.3.1 Civil agencies. Shipments shall be marked in conformance with Fed. Std. 123.

5.3.2 Military requirements. In addition to any special marking required by the contract or order, shipments shall be marked in accordance with PPP-B-638.

Source: https://assist.dla.mil -- Downloaded: 2016-12-11T10:55Z
Check the source to verify that this is the current version before use.

6. NOTES

6.1 Intended use. Fiberboard boxes and folders are intended for use as either shipping containers or interior packaging media (nonshipper boxes).

6.1.1 Shipping containers. Shipping containers shall be selected for size and weight of contents in accordance with the normal or special requirements of tables I and II as specified (see 6.2).

6.1.1.1 Normal requirements. Normal requirements are intended for boxes to be used as a single trip, exterior container where multiple shipments are not involved (see tables I and II).

6.1.1.2 Special requirements. Special requirements may specify lower gross weights and size limits; and, are intended for exterior containers to be used where more hazardous storage and shipping conditions are anticipated (see tables I and II).

6.1.2 Interior packaging boxes. The weights and sizes specified in tables I and II do not apply to boxes which are to be used in a manner that precludes their functioning as an exterior container. Fiberboard boxes, used within a barrier material or as a protective media where the box will always be overpacked or used in a manner that precludes their functioning as an exterior shipping container, are considered to be non-shipper boxes. Interior boxes should be marked "Non-Shipper."

6.1.3 Fire retardant boxes. Fire retardant boxes are intended to reduce the risks and hazards of fire aboard Navy ships and to improve readiness by reducing losses due to fire destruction in compliance with the Navy Passive Fire Protection Program.

6.2 Ordering data. Purchasers should select the preferred options permitted herein, and include the following information in procurement documents:

Source: https://assist.dla.mil -- Downloaded: 2016-12-11T10:55Z
Check the source to verify that this is the current version before use.

(a) Title,, number, and date of this specification.
(b) Type, class, variety, grade, and style of box (see 1.2.1 and 6.3).
(c) Box style required other than RSC (see 1.2.2, 3.1.1, and 3.4.1).
(d) When sleeve is required (see 1.2.3, 3.2.2.1, and 3.4.1.2).
(e) When liner is required of SW or DW fiberboard and grade of fiberboard required (see 1.2.4, 3.2.2.2, 3.4.1.3, and 3.4.2.2).
(f) When the box is for special requirements (see tables I and II, 3.4.1, and 3.4.2).
(g) When maximum weight requirements for V11c boxes may be increased (see table II).
(h) Distance of overlap for OSC boxes (see 3.2.1.2).
(i) When type II cover is required for HSC and DBLCC boxes (see 3.2.1.7, and 3.2.1.8).
(j) Depth of cover other than 3 inches for HSC and DBLCC boxes (see 3.2.1.7 and 3.2.1.8).
(k) When covers and bodies are to be shipped unassembled (see 3.2.1.7, 3.2.1.8, and 3.2.1.10).
(l) Depth of flange for IC boxes if other than specified (see 3.2.1.9).
(m) When glued flaps of FTC are permitted (see 3.2.1.10).
(n) When flaps of the FTC box are required to be arranged in a manner other than that specified in 3.2.1.10.
(o) When the ends of the liner shall abut in other than the center of the side panel of the box (see 3.2.2.2).
(p) Inside dimensions of box, specified in inches, in order of length, width, and depth (see 3.3).
(q) When the direction of flutes is to run parallel to score line of box opening (see 3.4.1 and 3.4.2).
(r) When taping of manufacturer's joint is permitted for W5 and W6 boxes (normally for interior boxes (see 3.4.1.1.2).
(s) When liner joints secured with adhesive are to be used (see 3.4.1.3).
(t) When other variety or grade fiberboard is required for liners (see 3.4.1.3 and 3.4.2.2).
(u) Printing and marking required in addition to certification (see 3.5.2, 3.5.3, and 30.6).
(v) Applicable levels of packing (see 5.1).
(w) When palletization is required (see 5.2).
(x) When method II closure and a specific material is required (see 30.3.1.2 and 30.3.2.1.4).
(y) When method VI closure for weather-resistant and weather-resistant/fire retardant and WWVR fiberboard boxes is required (see 30.3.2 and 50.1.5.2).
(z) When taping of shipping container is required (see 30.3.2 and 30.3.2.1.3).

Source: https://assist.dla.mil -- Downloaded: 2016-12-11T10:55Z
Check the source to verify that this is the current version before use.

(aa) When waterproofing of interior and exterior slotted style boxes is required (see 30.4).
(bb) When reinforcing is not required for weather-resistant and weather-resistant/fire retardant and WWVR boxes (see 30.5.2).
(cc) When nonmetallic banding is required for domestic class boxes (see 30.5.4.1).
(dd) Number of metal bands required for boxes over 48 inches wide, 60 inches long, or over 48 inches deep, or when additional boards are required (see table VII).
(ee) When method I may be used for unitized or palletlzed boxes (see 50.1.4.1).

6.3 Class weather-resistant and weather-resistant/fire retardant and WWVR boxes. To facilitate reference to the weather-resistant and weather-resistant/fire retardant and WWVR fiberboards coverd by this specification, complete compliance symbol only should be used to designate the type, class, and grade desired in correspondence, contract orders, etc., thus W5c rather than type CF, class weather-resistant, grade W5c; V3c, WWVR rather than type CF, class waterproof and watervapor resistant, variety SW, grade V3c (see 1.2.1).

6.4 Use of other specifications. Nothing in this specification shall be construed to prohibit the use of boxes of special design or of fiberboard packages identified by package number in the current Uniform Freight Classification and National Motor Freight Classification when the experience and judgement of the purchaser, the nature of the articles or material to be shipped justifies such boxes or packages. Exceptional commodities may require less protection while other commodities may require better boxes than are herein specified. Containers for explosives and dangerous articles shall comply with the specifications prescribed in the Department of Transportation's Regulations for the Transportation of Explosives and Other Dangerous Articles. In addition, for the particular articles to which these regulations apply, if the requirements contained in this specification are more stringent, then they must also meet the requirements specified herein. (The DOT Regulations apply to such articles as explosives, flammable liquids and solids, compressed gases, oxidizing materials, poisons, etc.). For shipment of hazardous materials overseas, the United Nations' regulations must also be followed.

6.5 Definition - Post Consumer Recovered Material is defined as paper, paperboard and fibrous wastes from factories, retail stores, official buildings, homes, etc. after they had passed through their end usage as a consumer item, including: used corrugated boxes; old newspapers; old magazines; mixed waste paper; tabulating cards; and used cordage. All paper, paperboard, and fibrous waste that enter and are collected from municipal solid waste.

Source: https://assist.dla.mil -- Downloaded: 2016-12-11T10:55Z
Check the source to verify that this is the current version before use.

6.6 Precautions in Handling for Fire Retardant Boxes. Certain individuals may experience adverse reactions of a respiratory, dermatological, or other nature due to contact with some fire retardant packaging materials. Problems or adverse effects resulting or suspected from handling these materials should be referred to the local medical department for appropriate follow-up. Safety concerns should be referred to the local safety office for review. Questions regarding specific packaging materials may be referred to the Navy Environmental Health Center, Code 34B, Norfolk, VA. The following precautions during handling are recommended:

(a) Cotton gloves should be worn. Gloves should be changed at the end of the workshift, and laundered before reuse or discarded. Gloves should be changed more frequently if they fail to provide protection against skin contamination during the workday.

(b) Good general ventilation should be provided to insure that significant airborne levels of dust from fire retardant packaging materials do not accumulate in work areas. Questions should be referred to the local Industrial Hygienist for review. If dust generation is unavoidable, a National Institute for Occupational Safety and Health/Mine Safety and Health Administration approved respirator, selected based on the exposure of concern must be provided and used. Contact the local Industrial Hygienist for specific guidance pertaining to requests for training and use of approved respirators.

Source: https://assist.dla.mil -- Downloaded: 2016-12-11T10:55Z
Check the source to verify that this is the current version before use.

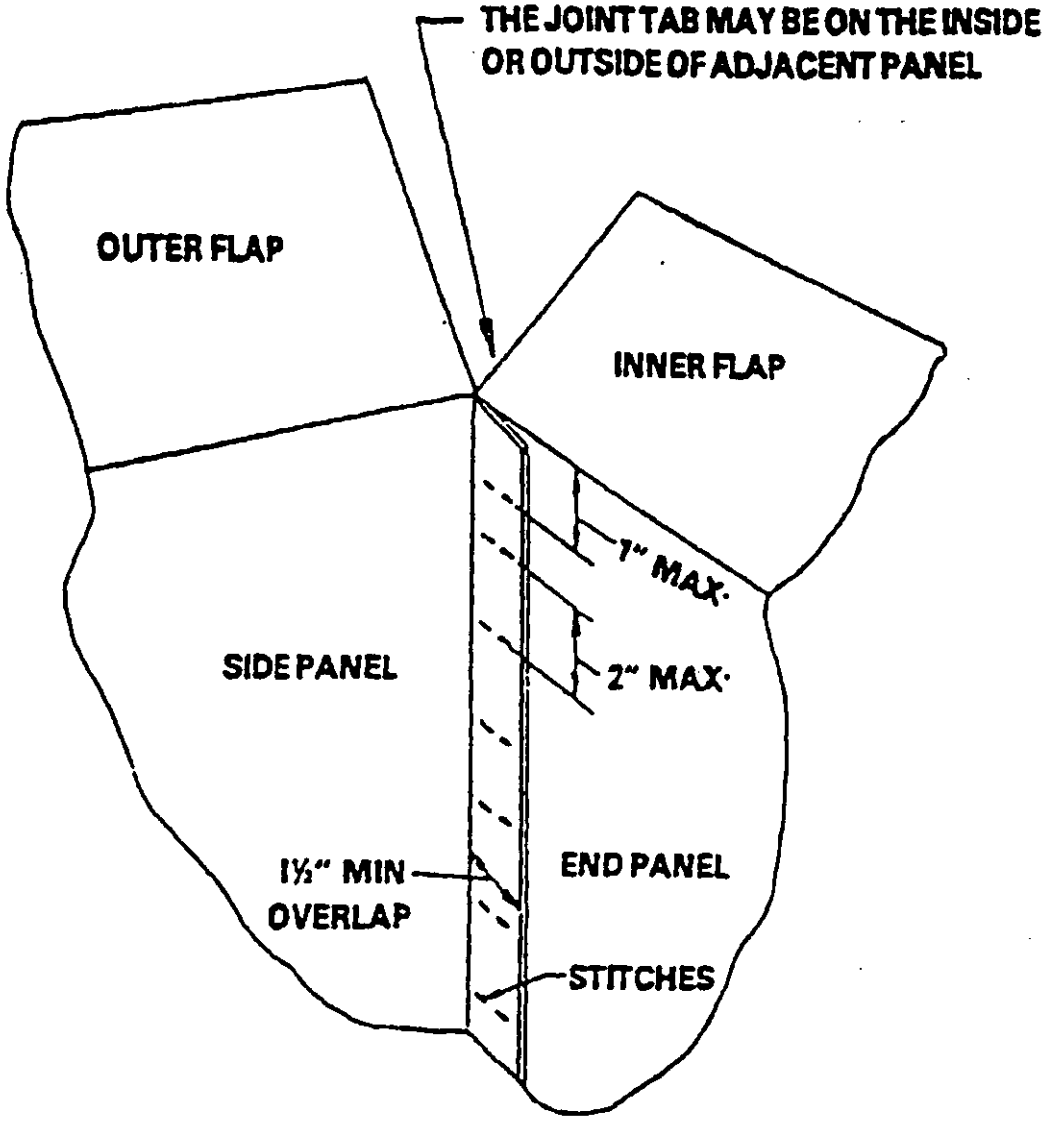

NOTE: THE JOINT TAB MAY BE INTEGRAL WITH END OR SIDE PANEL; STITCHES MAY BE HORIZONTAL OR DIAGONAL IN ACCORDANCE WITH STANDARD MANUFACTURING PRACTICE.

FIGURE 1 BOX, FIBERBOARD; DETAIL OF MANUFACTURE JOINT CONSTRUCTION FOR CLASS WEATHER RESISTANT AND WWVR BOXES

Source: https://assist.dla.mil -- Downloaded: 2016-12-11T10:55Z
Check the source to verify that this is the current version before use.

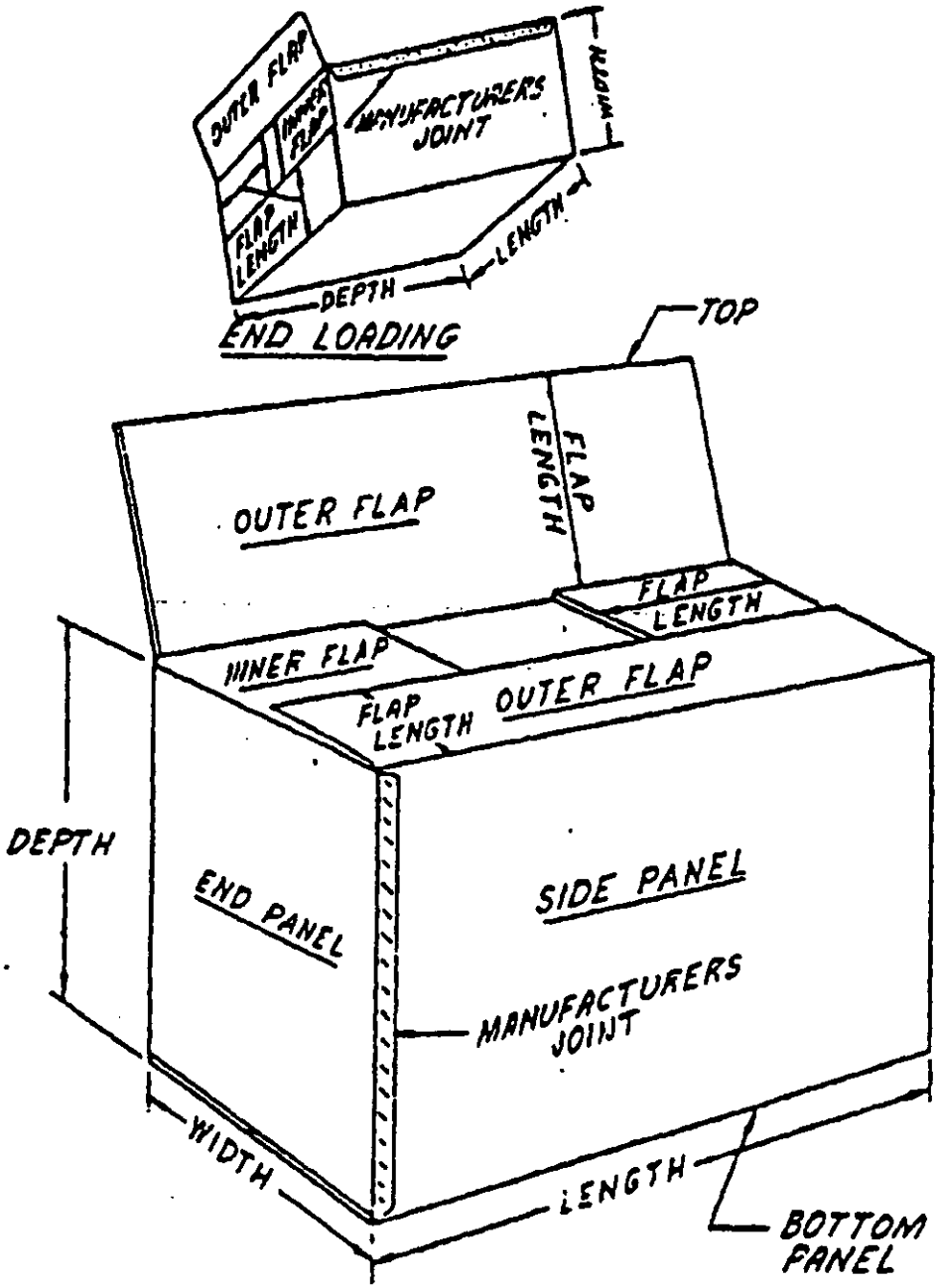

OUTER FLAPS MEET; INNER AND OUTER FLAPS ARE OF EQUAL LENGTH.

FIGURE 2. BOX, FIBERBOARD; RSC-REGULAR SLOTTED BOX

Source: https://assist.dla.mil -- Downloaded: 2016-12-11T10:55Z
Check the source to verify that this is the current version before use.

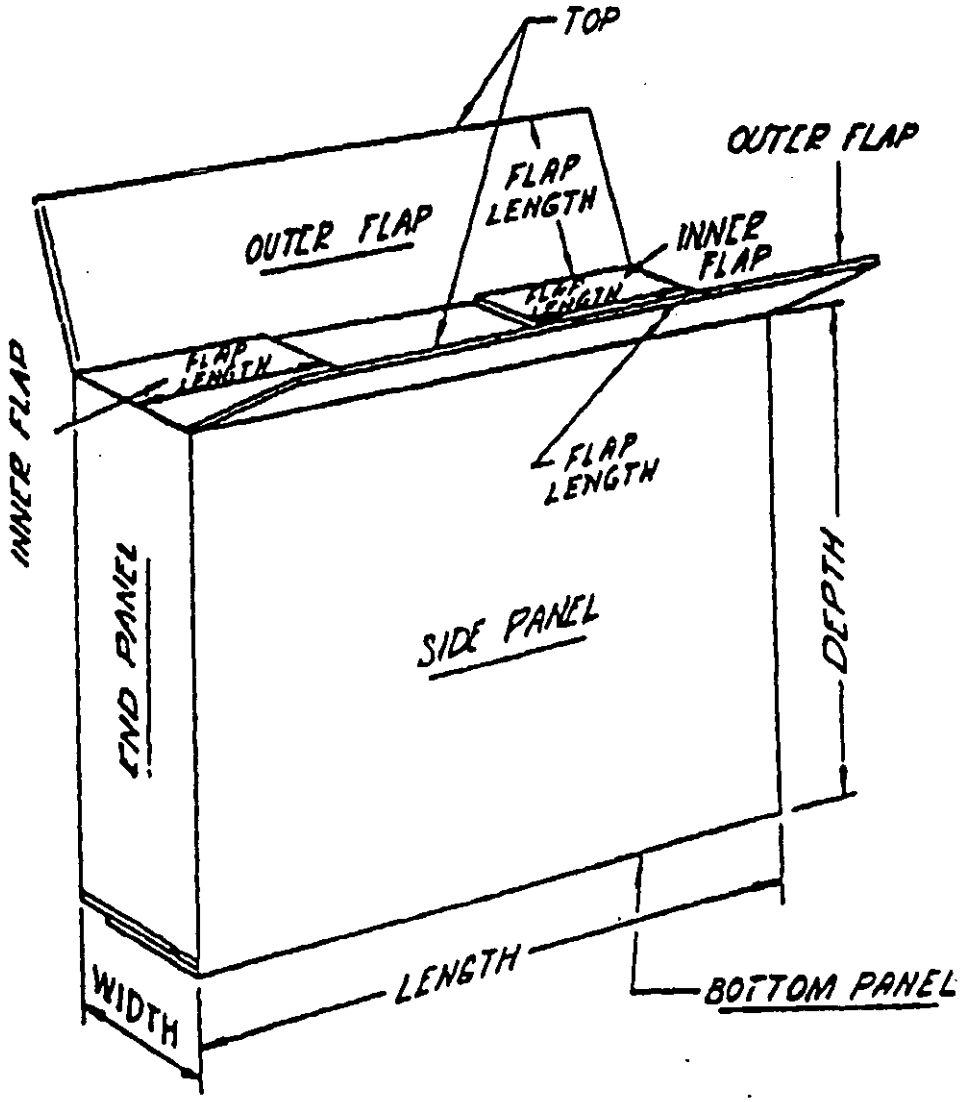

OUTER FLAPS OVERLAP AS SPECIFIED; INNER FLAPS SAME LENGTH AS OUTER FLAPS.

FIGURE 3. BOX, FIBERBOARD; OSC-OVERLAP SLOTTED BOX

Source: https://assist.dla.mil -- Downloaded: 2016-12-11T10:55Z
Check the source to verify that this is the current version before use.

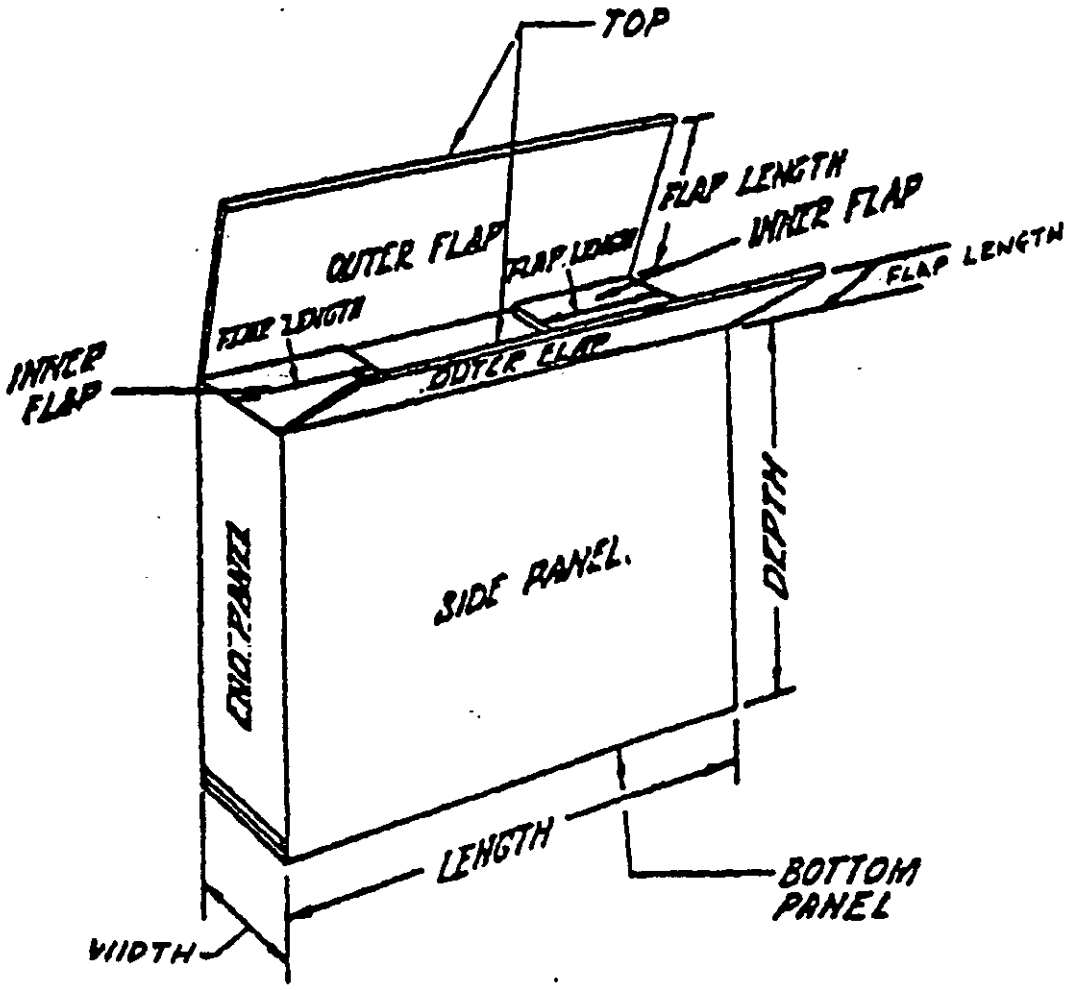

OUTER FLAPS FULL OVERLAP (SEE DETAIL REQUIREMENTS)
INNER FLAPS SAME LENGTH AS OUTER FLAPS

FIGURE 4. BOX, FIBERBOARD; FOL-FULL OVERLAP SLOTTED BOX

Source: https://assist.dla.mil -- Downloaded: 2016-12-11T10:55Z
Check the source to verify that this is the current version before use.

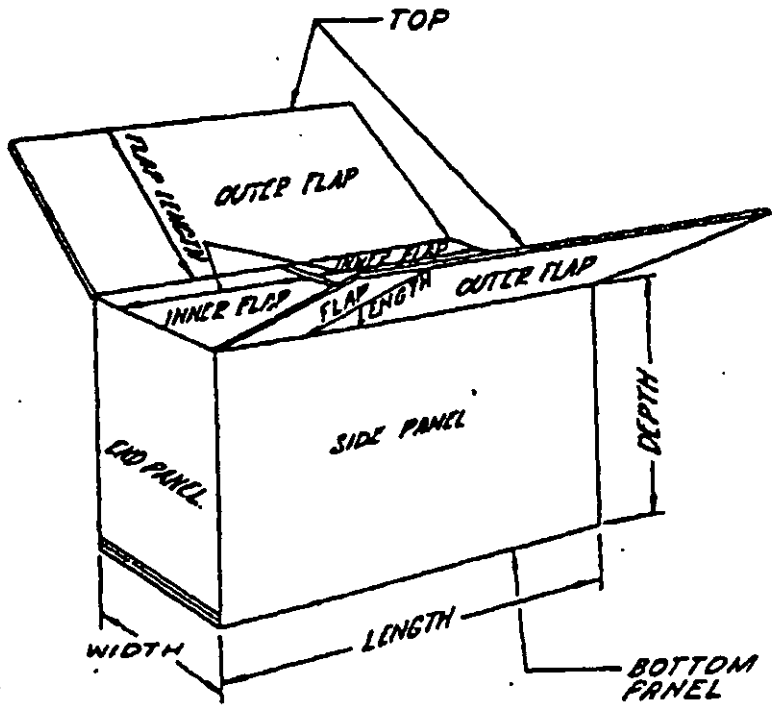

FIGURE 5. BOX, FIBREBOARD; SFF-SPECIAL FULL FLAP SLOTTED BOX

Source: https://assist.dla.mil -- Downloaded: 2016-12-11T10:55Z
Check the source to verify that this is the current version before use.

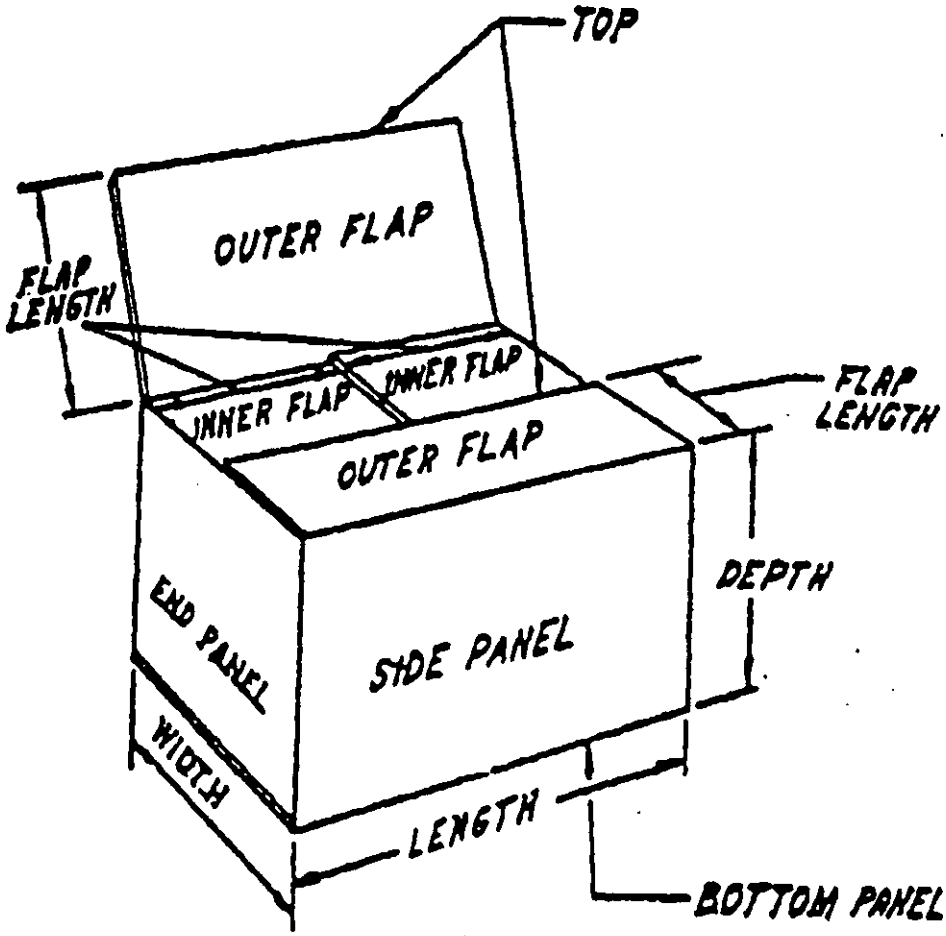

OUTER FLAPS MEET
INNER FLAPS MEET — CSSC

OUTER FLAPS OVERLAP
AT RANDOM NO FLAP CUTTING
INNER FLAPS MEET — CSOSC

FIGURE 6. BOX, FIBERBOARD, CSSC-CENTER SPECIAL SLOTTED BOX AND CSOSC- CENTER SPECIAL OVERLAP SLOTTED BOX.

Source: https://assist.dla.mil -- Downloaded: 2016-12-11T10:55Z
Check the source to verify that this is the current version before use.

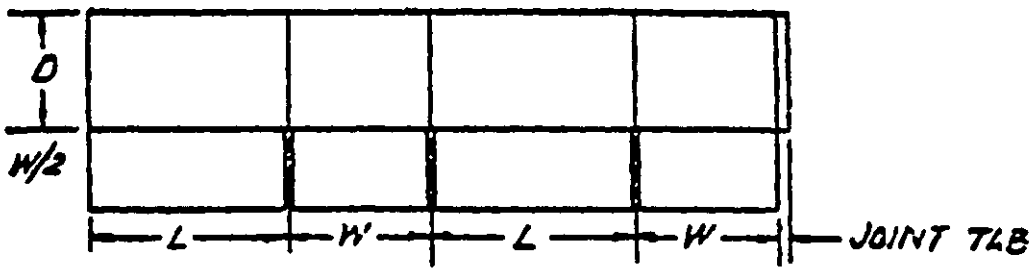

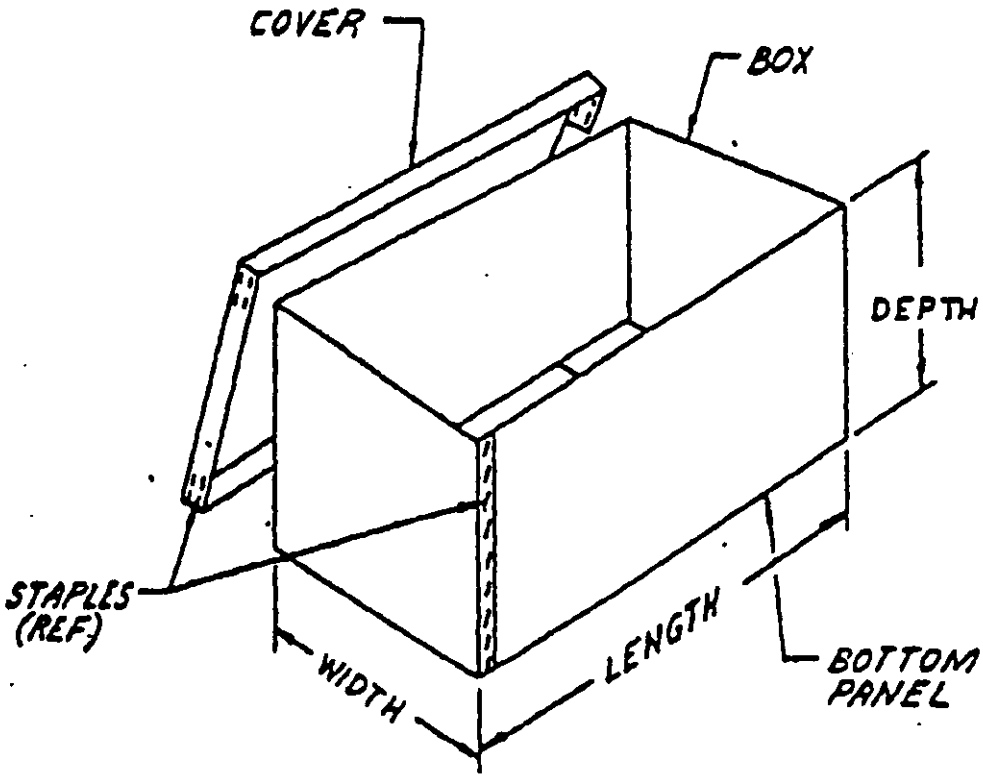

FIGURE 7. BOX, FIBERBOARD; HSC HALF SLOTTED BOX WITH COVER

Source: https://assist.dla.mil -- Downloaded: 2016-12-11T10:55Z
Check the source to verify that this is the current version before use.

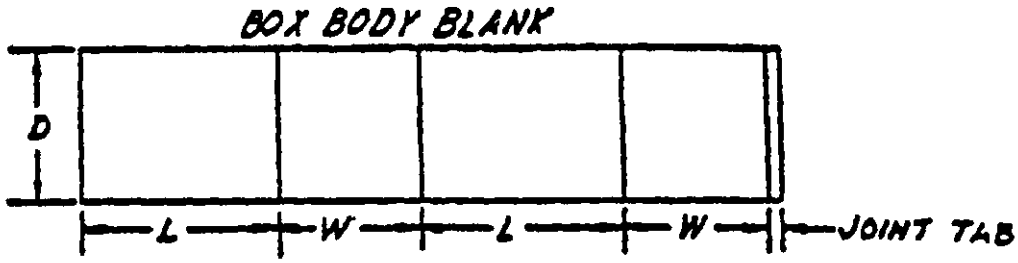

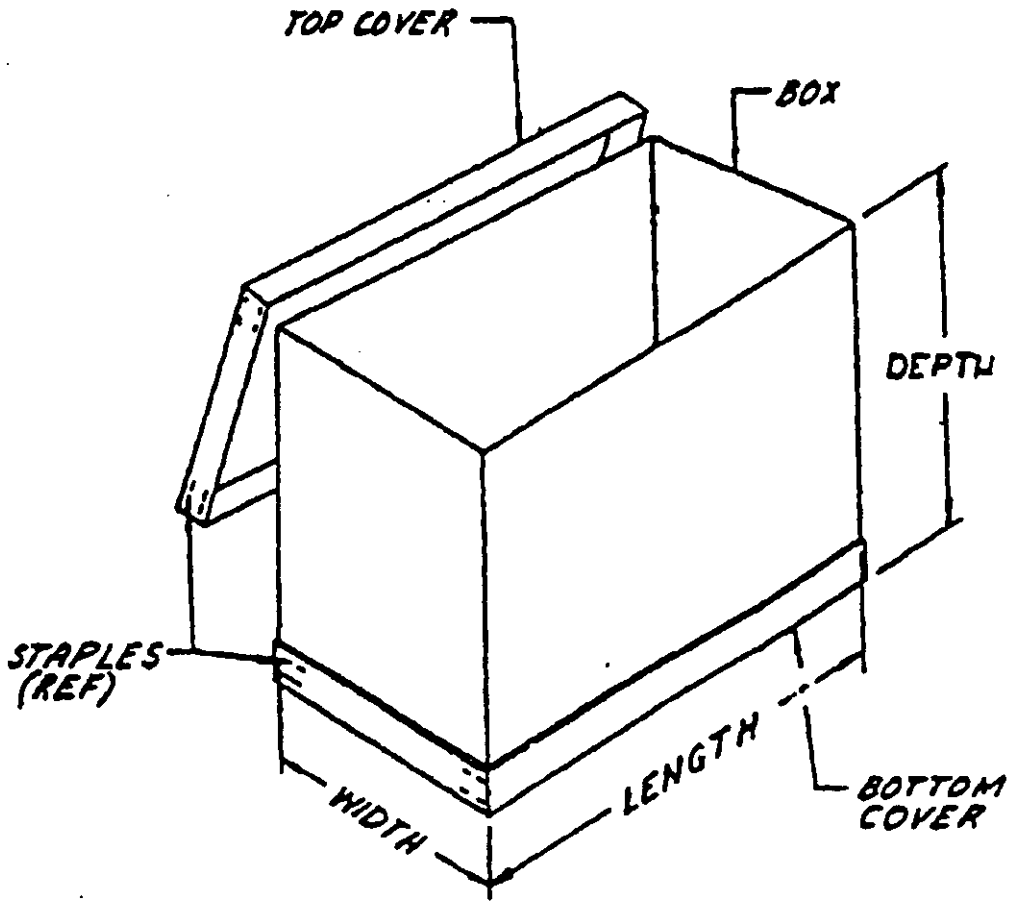

FIGURE 8. BOX, FIBERBOARD; DBLCC - DOUBLE COVER

Source: https://assist.dla.mil -- Downloaded: 2016-12-11T10:55Z
Check the source to verify that this is the current version before use.

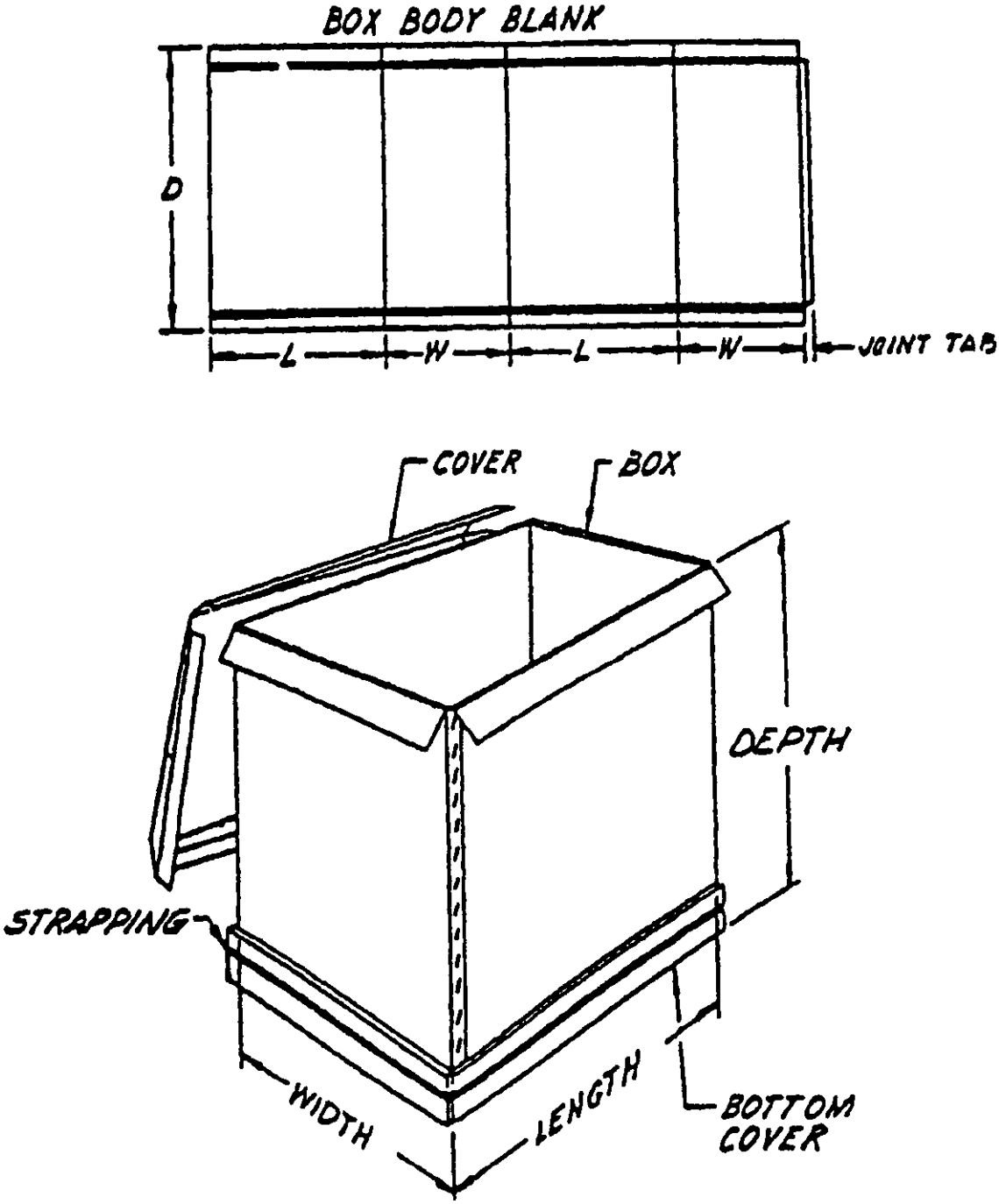

FIGURE 9. BOX, FIBERBOARD, IC-INTERLOCKING DOUBLE COVER

Source: https://assist.dla.mil -- Downloaded: 2016-12-11T10:55Z
Check the source to verify that this is the current version before use.

OPTIONAL FLAP ARRANGEMENTS

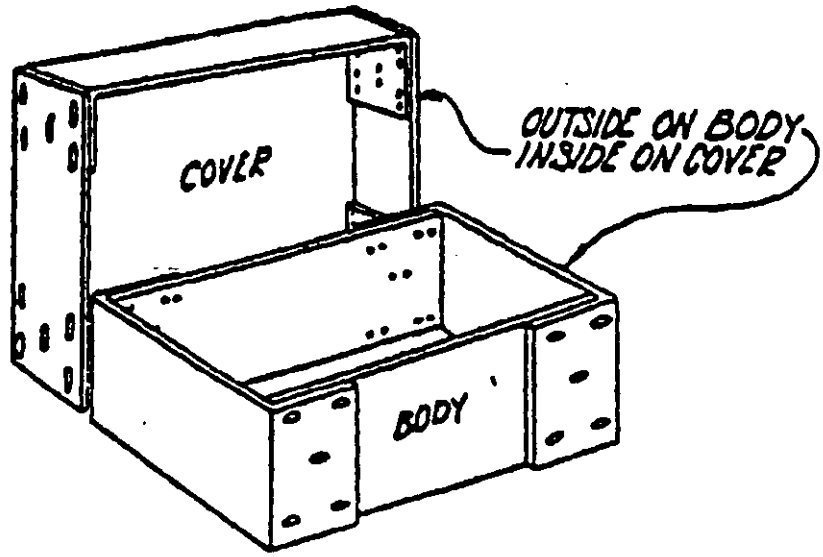

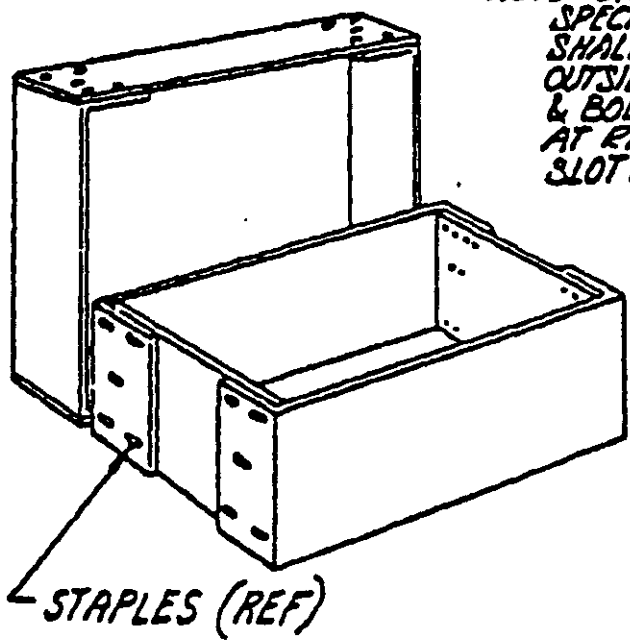

NOTE - UNLESS OTHERWISE SPECIFIED, COVER DEPTH SHALL EQUAL OVER-ALL OUTSIDE HEIGHT OF BODY; & BODY SLOTTING SHALL BE AT RIGHT ANGLES TO COVER SLOTTING.

FIGURE 10. BOX, FIBERBOAD; FTC FULL TELESCOPE

Source: https://assist.dla.mil -- Downloaded: 2016-12-11T10:55Z
Check the source to verify that this is the current version before use.

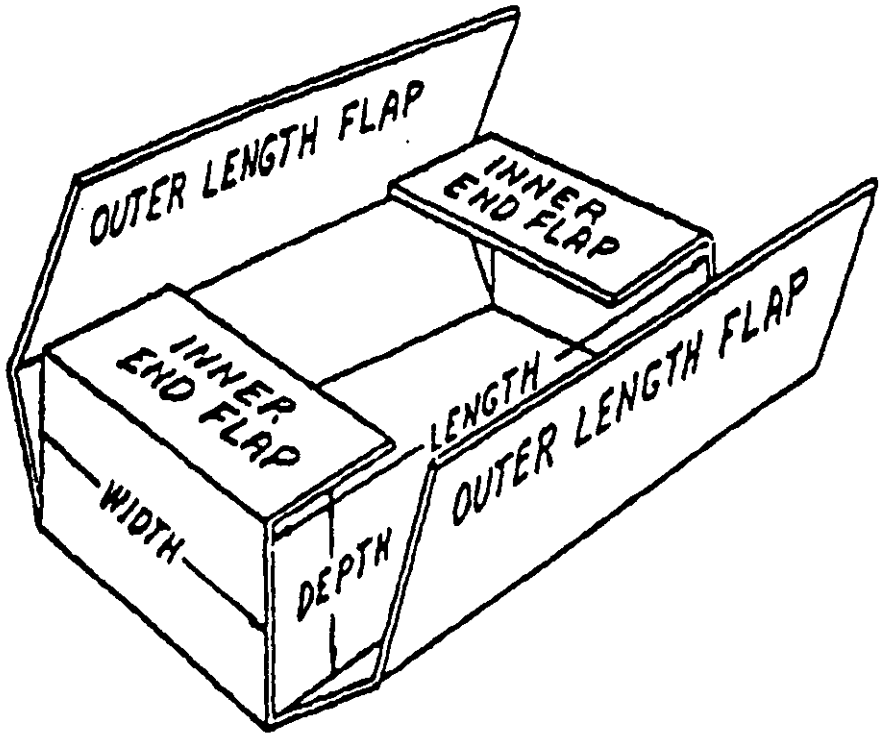

OUTER FLAPS MEET

FIGURE.11. FOLDER, FIBERBOARD, OPF - ONE PIECE FOLDER

Source: https://assist.dla.mil -- Downloaded: 2016-12-11T10:55Z
Check the source to verify that this is the current version before use.

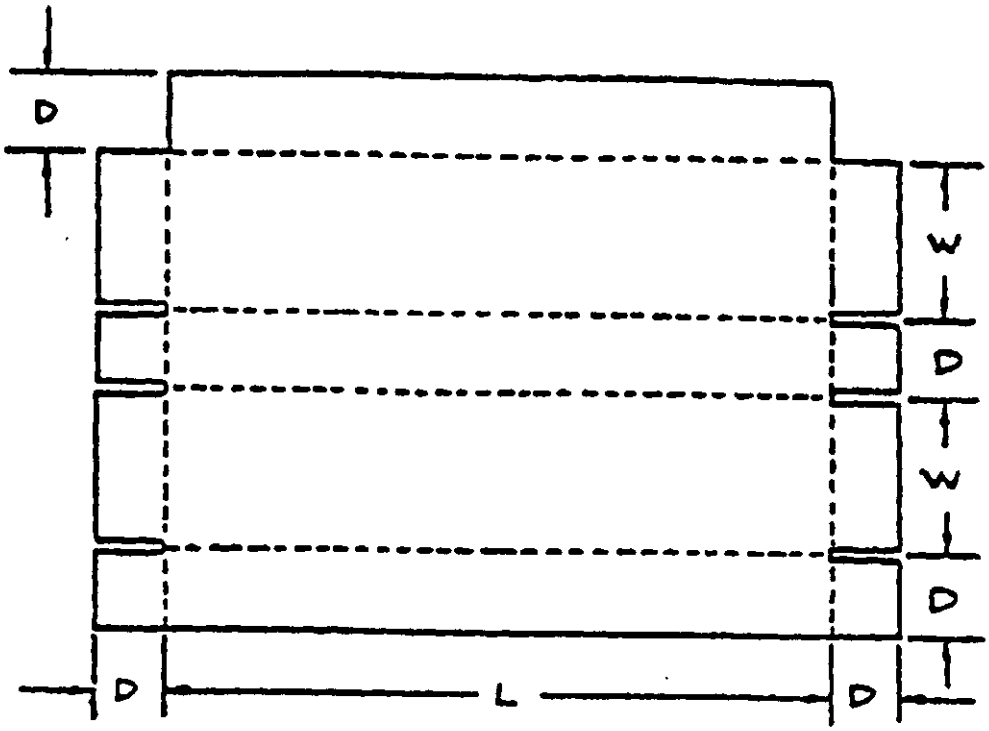

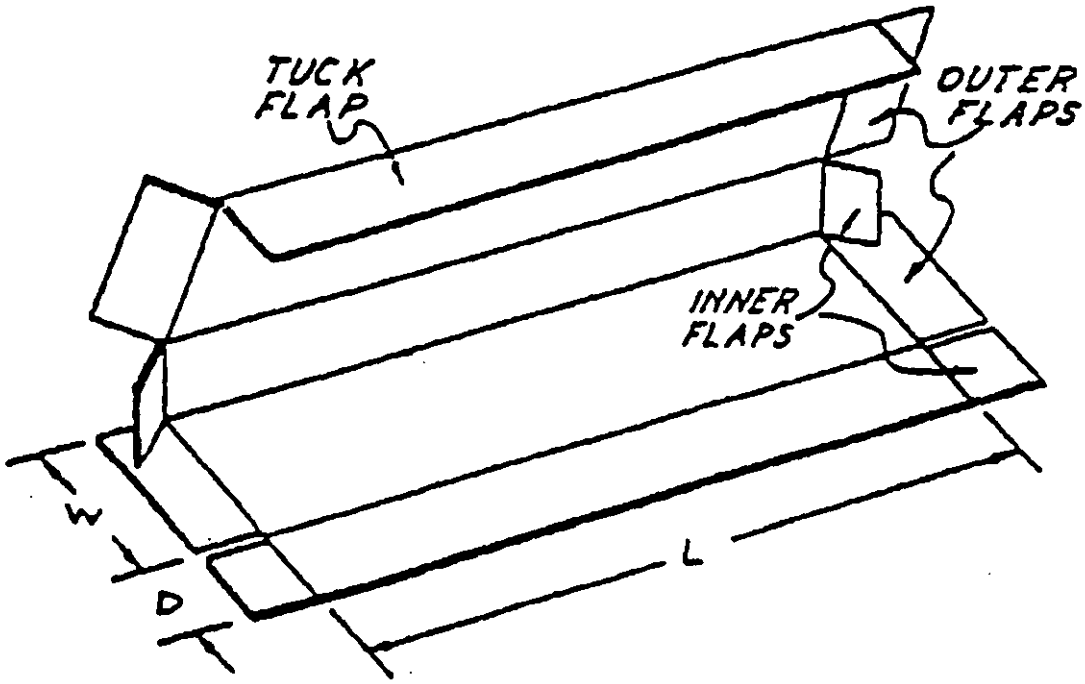

FIGURE 12. FOLDER, FIBERBOARD; FPF-FIVE PANEL FOLDER

Source: https://assist.dla.mil -- Downloaded: 2016-12-11T10:55Z
Check the source to verify that this is the current version before use.

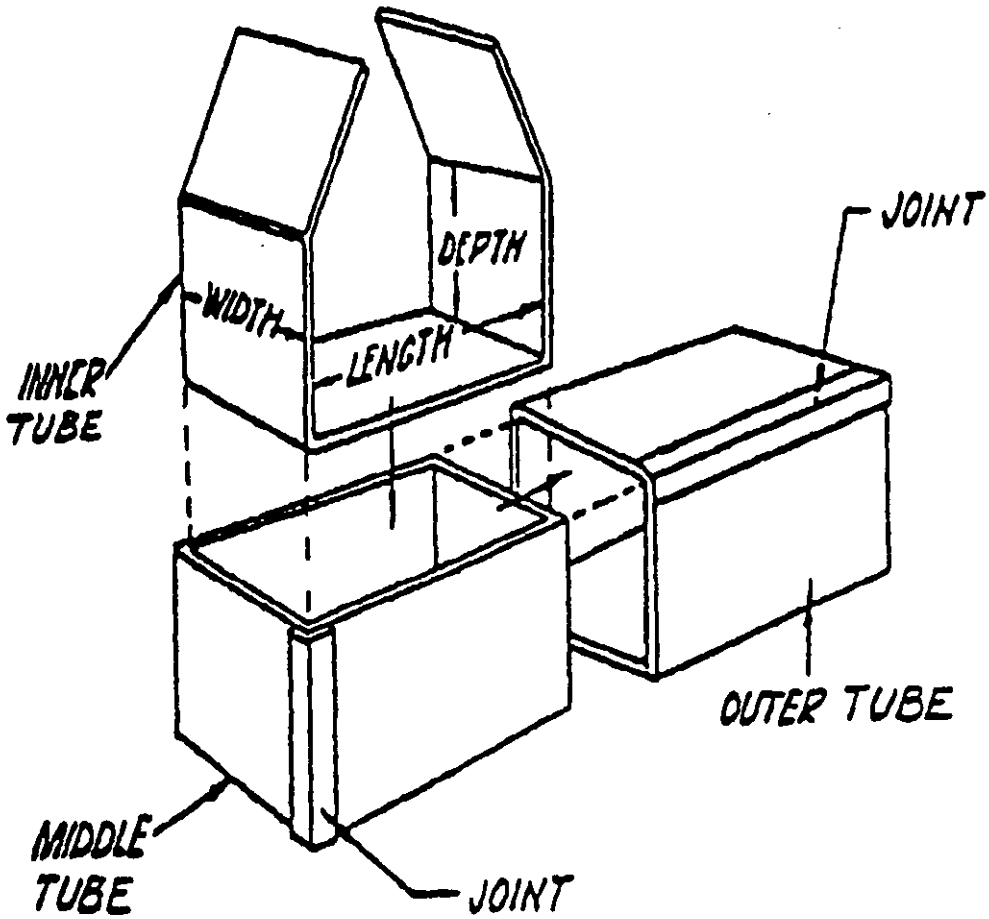

FIGURE 13. BOX, FIBERBOARD; TS TRIPLE SLIDE BOX

Source: https://assist.dla.mil -- Downloaded: 2016-12-11T10:55Z
Check the source to verify that this is the current version before use.

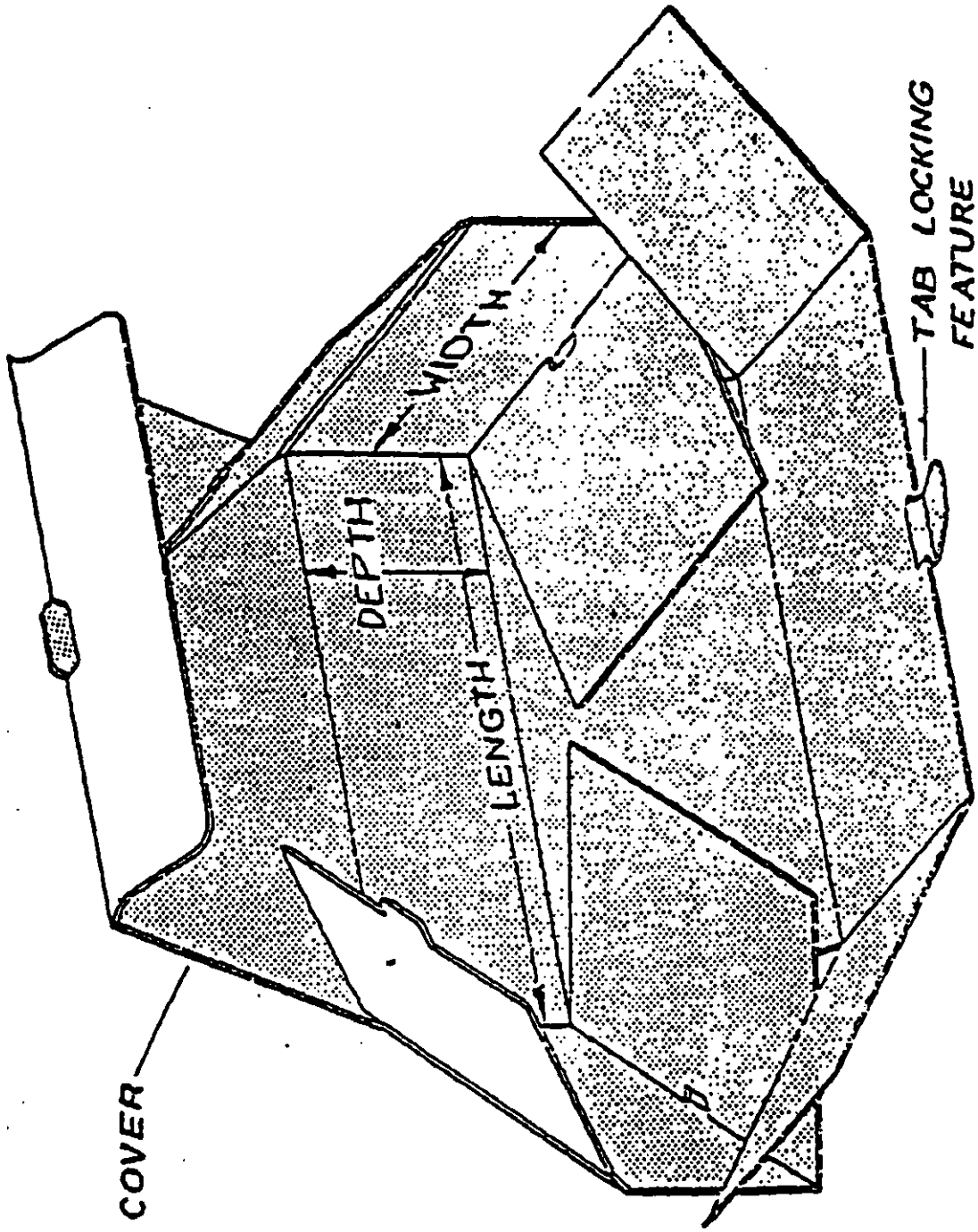

FIGURE 14. FOLDER, FIBERBOARD; TSC-TONGUE AND SLOT. CLOSURE

Source: https://assist.dla.mil -- Downloaded: 2016-12-11T10:55Z
Check the source to verify that this is the current version before use.

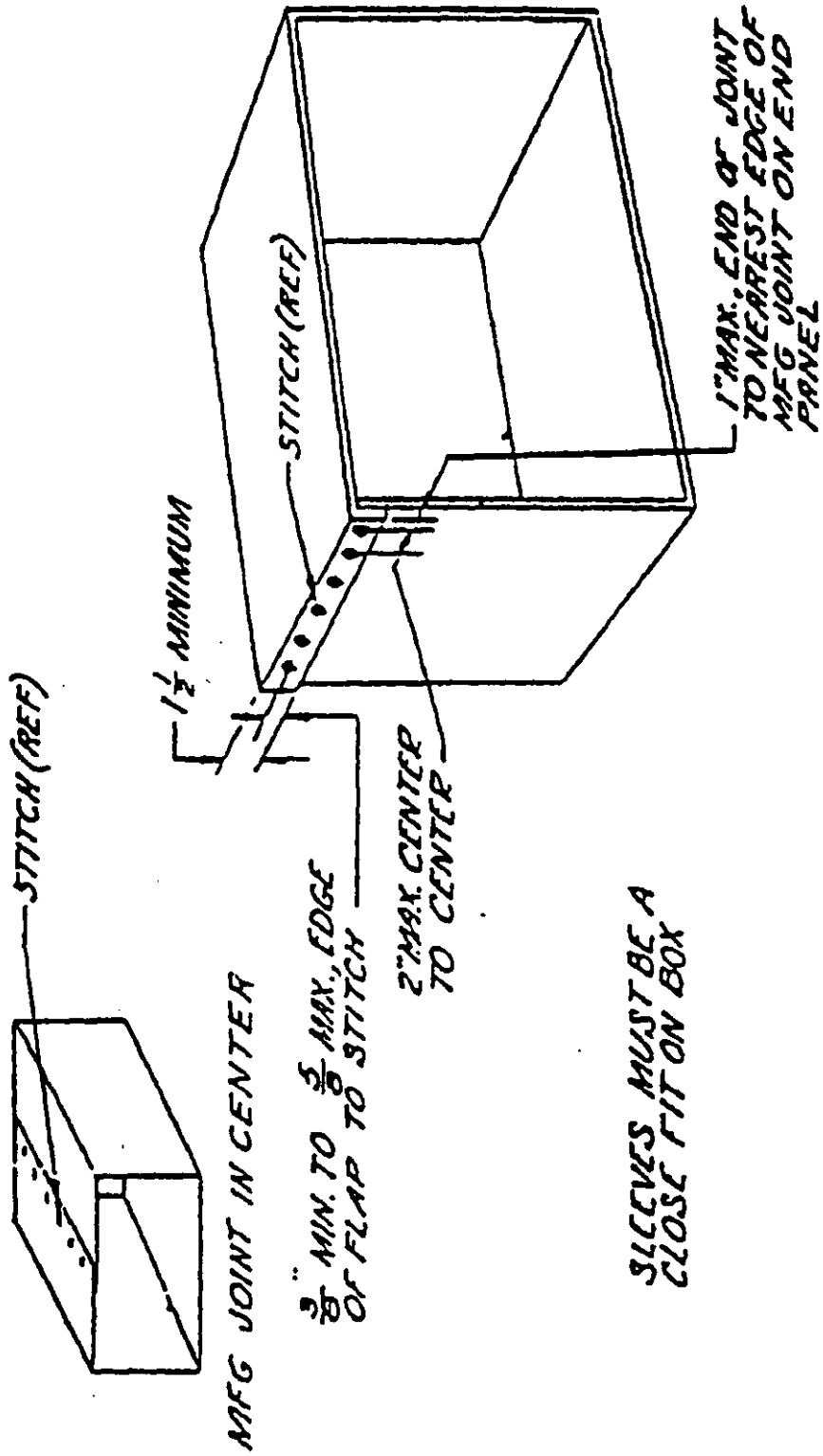

FIGURE 15. BOX, FIBERBOARD; SL - SLEEVE

Source: https://assist.dla.mil -- Downloaded: 2016-12-11T10:55Z
Check the source to verify that this is the current version before use.

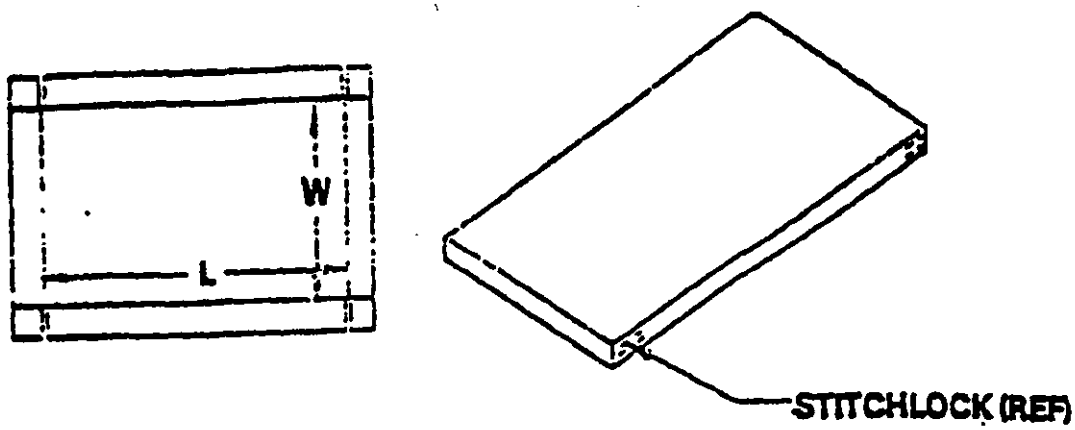

TYPE I STITCH LOCK

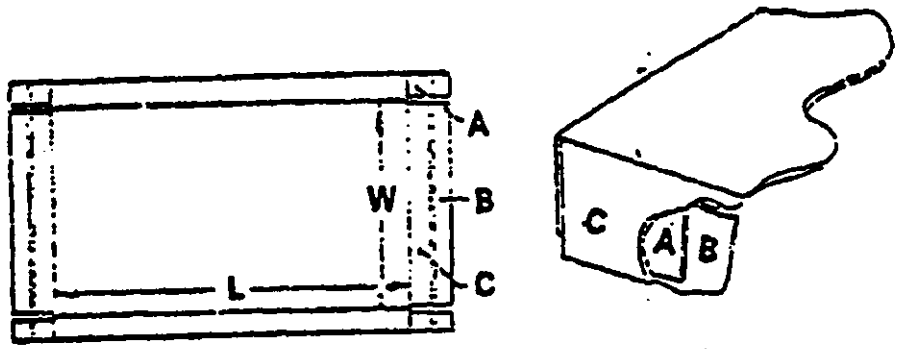

TYPE II FRICTION LOCK

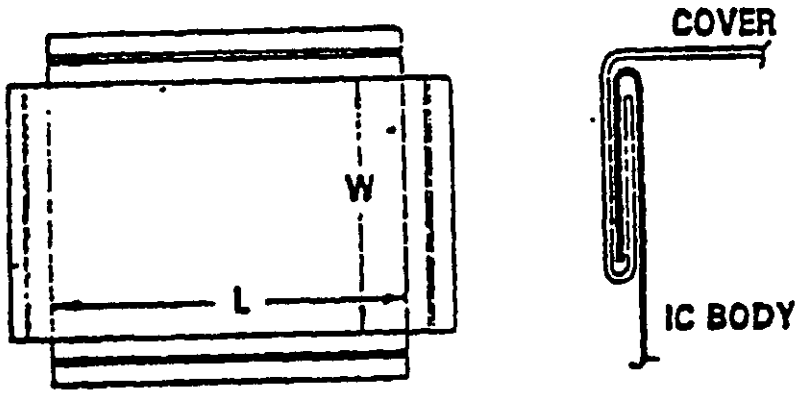

TYPE III FLANGE INTERLOCK

FIGURE 16· COVER ASSEMBLY

Source: https://assist.dla.mil -- Downloaded: 2016-12-11T10:55Z
Check the source to verify that this is the current version before use.

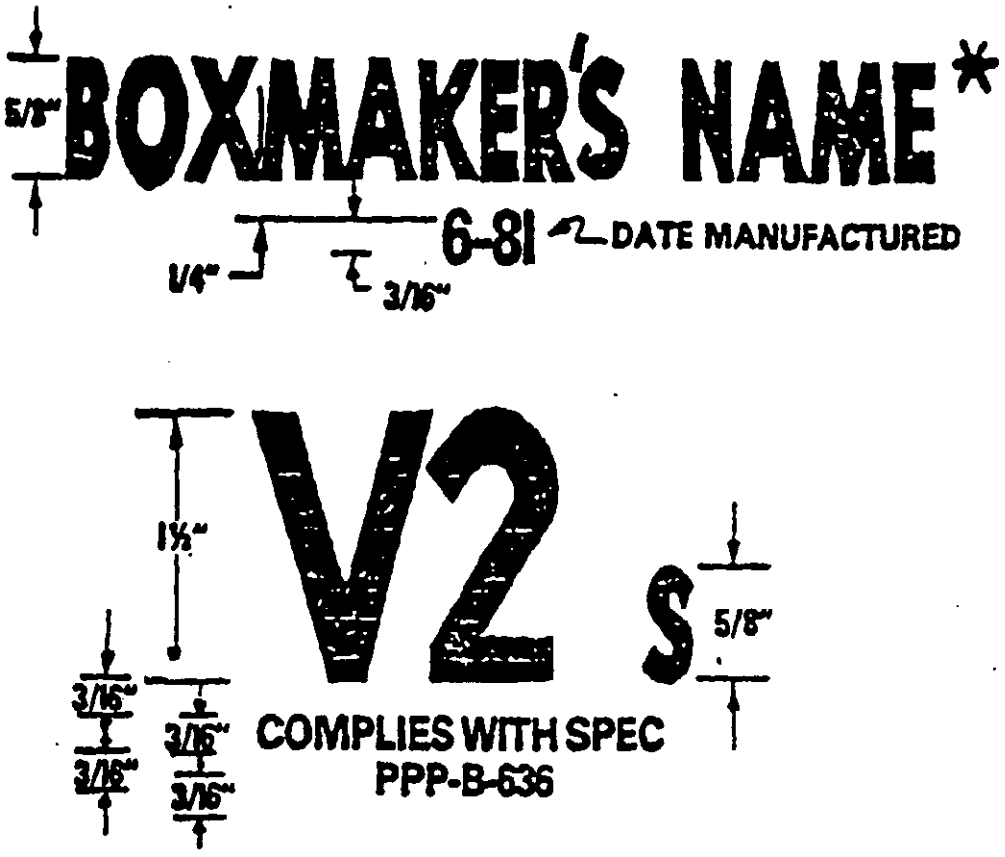

DIMENSION AND CUBE (SEE 3.5.1) ★★

NOTE: ★ CAN BE BOXMAKER'S CERTIFICATE, ROUND OR RECTANGULAR AS APPLICABLE, AND IT MAY BE LOCATED ON THE BOX WHERE IT IS CUSTOMARILY PLACED.

★★ DIMENSIONS & CUBE OTHER THAN SPECIFIED IN MIL-STD-129 SHALL BE PRINTED ONLY ON GOVERNMENT PROCURED BOXES

MINIMUM BURSTING STRENGTH - PSI

FIGURE 17. COMPLIANCE MARKING FOR CLASS WEATHER - RESISTANT AND WWVR BOXES

Source: https://assist.dla.mil -- Downloaded: 2016-12-11T10:55Z
Check the source to verify that this is the current version before use.

MEASURE SAMPLES OF FINISHED STITCHES BEFORE DRIVING INTO FIBERBOARD. THE SAMPLE STITCHES ARE TO BE MADE UNDER POWER AND UNCLINCHED.

BOTH FLAT SECTIONS HAVE SAME MEASUREMENT WHEN ARCED

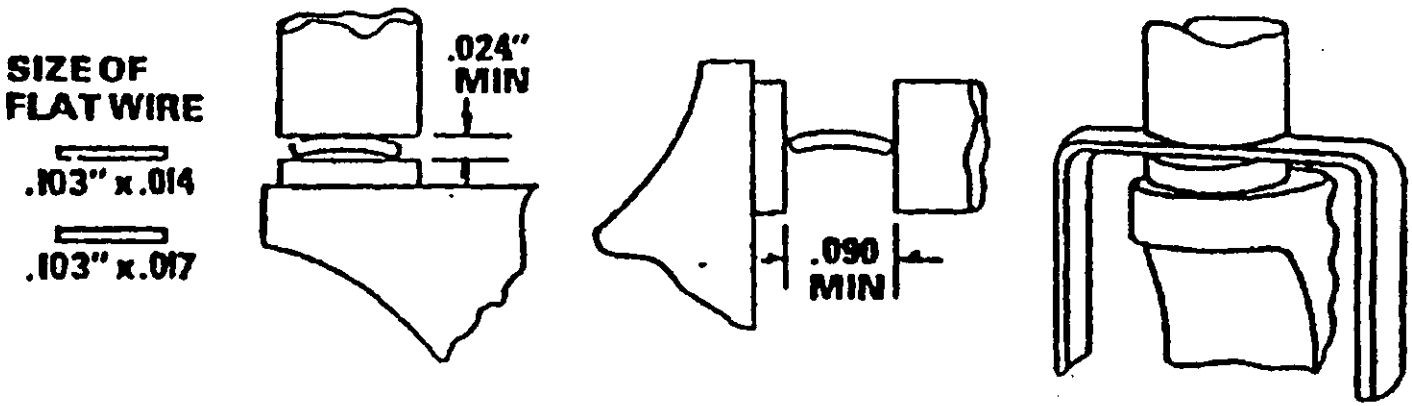

WIRE IN JAWS OF MICROMETER FOR MEASUREMENT OF THICKNESS.

WIRE IN JAWS OF MICROMETER FOR MEASUREMENT OF WIDTH.

INDICATED POSITION FOR UNIFORM MEASUREMENT OF CROWN FORMATION.

FIGURE 18. METHOD OF MEASURING FORMED WIRE STITCH

Source: https://assist.dla.mil -- Downloaded: 2016-12-11T10:55Z
Check the source to verify that this is the current version before use.

APPENDIX

USE CRITERIA, ASSEMBLY, CLOSURE, WATERPROOFING, AND REINFORCING REQUIREMENTS

10. SCOPE

10.1 Scope. This appendix covers requirements for use, assembly, closure, waterproofing of contents, and reinforcing of fiberboard boxes.

10.2 Use criteria.

10.2.1 Use. Corrugated and solid fiberboard boxes are used for shipping articles that are not easily susceptible to damage caused by shipment. The selection of the proper style and strength of fiberboard container should be carefully considered for loading purposes and to insure the commodity against the hazards of handling and transportation (see 50). Since it may be difficult to decide the proper style and strength necessary, the information and examples in 10.2.2 and tables I and II are furnished. Although it is impossible to cover every item packed, the examples represent groups of products; and, any item belonging to that group will generally be packed in a similar manner. Articles normally packed in the fiberboard boxes should be type 1 or 2 loads. Type 3 loads shall be converted to type 2 by additional packaging. Canned subsistence items shall be packed in either end loading or top loading slotted boxes.

10.2.2 Types of loads. Types of loads are determined by the degree of structural strength imparted to the shipping container by the contents. Loads are classified as type I, easy loads; type 2, average loads; and type 3, difficult loads; as described herein. A type 3, difficult load shall not be packed in a fiberboard box unless converted to a type 1 or 2 load.

10.2.2.1 Type 1. easy load. A type 1, easy load is developed from an item which completely fills the outer shipping container or from items of moderate density prepackaged in an interior container which completely fills the outer shipping container. Easy load items are not easily damaged by puncture or shock and do not shift or otherwise move within the package.

Source: https://assist.dla.mil -- Downloaded: 2016-12-11T10:55Z
Check the source to verify that this is the current version before use.

10.2.2.1.1 Examples of type 1, easy loads. Items packaged in boxes or cans which are prepackaged in fiberboard boxes prior to overpacking in the shipping container; chests; tool kits; and sturdy instruments; which are fully in contact with and support all faces of the shipping container.

10.2.2.2 Type 2, average load. A type 2 average load is developed from items of moderately concentrated weight which are packed directly into the shipping container and provide support to all panels thereof. Also items prepackaged by wrapping or by positioning in partitions, cells or paperboard boxes, or by other means which provide support to all panels of the shipping container.

10.2.2.2.1 Examples of type 2, average loads. Items packaged in boxes or cans which are not prepackaged in an interior container; bottles individually separated one from the other by cells or partitions.

10.2.2.3 Type 3, difficult load. A type 3, difficult load is developed from items which require a high degree protection to prevent puncture, shock, or distortion of the shipping container. Also items which do not provide support to the panels of the shipping container. Type 3, difficult load shall not be shipped in a fiberboard box unless it is converted to a type 1 or 2 loads.

10.2.2.3.1 Examples of type 3, difficult load. Wrenches, long bolts, and rods which exert concentrated forces on the shipping container; motors, telephones, typewriters, drop forgings, rivets, hardware, or other items that are random packed in bulk. Fragile items requiring special protection.

10.3 Loading. Boxes are normally loaded through the top opening of the box (see figure 2 and 3.2.1, 3.4.1, 50.2.5). Items such as canned subsistence, extra long commodities, or fully supporting type 1 loads may be packed in end loading boxes (see 3.2.1, 3.4.1, and 50.2.5). When support is required and an end load box is desired, the flutes should be parallel to the score line of the box opening (see 3.4.1 and 6.2).

20. APPLICABLE DOCUMENTS

20.1 The following documents, of the issue in effect on date of invitation for bids or request for proposal, form a part of this appendix to the extent specified herein:

Source: https://assist.dla.mil -- Downloaded: 2016-12-11T10:55Z
Check the source to verify that this is the current version before use.

Federal Specifications:

ASTM-D-3950 - Standard Specification for Strapping Plastic (and Seals).
ASTM-D-3953 - Standard Specification for Strapping, Flat Steel and Seals.
MMM-A-250 - Adhesive, Water Resistant (For Closure of Fiberboard Boxes).
MMM-A-260 - Adhesive, Water-Resistant (For Sealing Waterproofed Paper).
PPP-T-60 - Tape, Packaging, Waterproof.
PPP-B-1055 - Barrier Material, waterproofed, Flexible.
A-A-1492 - Tape, Gummed, Paper, Plain.
A-A-1671 - Tape, Gummed (Paper, Reinforced, Asphalt Laminated).
A-A-1683 - Tape, Pressure-Sensitive Adhesive (Packaging, Paper).
A-A-1685 - Tape, Pressure-Sensitive Adhesive (High Tensile Strength, Black, Weather-Resistant, Glass Filament Reinforced)
A-A-1687 - Tape, Pressure-Sensitive Adhesive (Medium Tensile Stength, Glass Filament, Reinforced Tape).

Federal Standards:

Fed. Std. No. 101 - Preservation, Packaging, and Packing Materials: Test Procedures.
Fed. Std. No. 224 - Closing, Sealing and Reinforcing of Fiberboard Shipping Containers, General Methods For.

Military Specifications:

MIL-L-10547 - Liners, Case, and Sheet Overwrap, Water-vaporproof or Waterproof, Flexible.
MIL-B-13239 - Barrier Material, Waterproofed, Flexible, All Temperatures.

30. REQUIREMENTS

30.1 Assembly of class domestic and domestic/fire retardant boxes.

30.1.1 Slotted styles. All slotted style boxes shall be assembled in accordance with referenced figures herein.

30.1.2 Slotted styles with covers. All slotted style boxes with covers shall be assembled in accordance with the figures referenced herein.

Source: https://assist.dla.mil -- Downloaded: 2016-12-11T10:55Z
Check the source to verify that this is the current version before use.

30.1.2.1 Type I cover (stitch lock). The type I cover end flaps (see figures 7, 8, and 16) shall be securely fastened to the inside of the adjoining side flange by not less than three stitches located not more than 1-1/4 inches nor less than 1/2 inch from free edges and score lines. Stitching wire or staples shall conform to 3.1.2.

30.1.2.2 Type II cover (friction lock). The type II cover end flanges B and C (see figure 16) shall be slightly wider than the side flanges "A" of the cover in order to produce a friction lock. Stitches shall not be used to assemble these covers.

30.1.2.3 Type III cover (flange interlock). All interlocking flange boxes shall be assembled in accordance with the figures 9 and 16 referenced herein. The interlocked flanges shall be secured by means of flat steel strapping applied horizontally one band width above the center line of the fold (see figure 9). The strapping shall be not less than 3/8 by 0.015 inch, finish A or B, grade 2, of ASTM-D-3953 or type II or III of ASTM-D-3950.

30.1.3 Style FTC. All body and cover flaps shall be securely fastened to the adjoining walls, as illustrated in figure 10.

30.2 Assembly of class weather-resistant and weather-resistant /fire retardant and WWVR boxes.

30.2.1 Slotted styles. Slotted style boxes shall be assembled in accordance with referenced figures herein.

30.2.2 Slotted styles with covers . Slotted style boxes with covers shall be assembled in accordance with referenced figures herein.

30.2.3 Style FTC. Body and cover flaps of style FTC boxes shall be securely fastened to the adjoining walls (see 3.2.1.10) with not less than five staples applied as illustrated in figure 10. Stitching wire or staples shall conform to 3.1.2. The fastenings shall be located not more than 1-1/2 Inches nor less than 1/4 inch from the free end edge or score of the flaps. Fastenings along the free end edge shall be not more than 4 inches apart.

30.3 Closure requirements. All boxes shall be securely closed in accordance with 30.3.1 or 30.3.2. Inner and outer flaps of slotted style boxes shall be drawn together as closely as possible to insure proper closure. The lengthwise flaps shall meet (RSC, CSSC) or overlap (OSC, FOL, SFF) as specified. The flaps shall not project over the side or end edges and the application of adhesive or metal stitches shall be such as to prevent lifting of free edges and corners of outer flaps on assembled boxes.

Source: https://assist.dla.mil -- Downloaded: 2016-12-11T10:55Z
Check the source to verify that this is the current version before use.

30.3.1 Class domestic and domestic/fire retardant boxes . Unless otherwise specified herein, class domestic and domestic / fire retardant boxes shall be securely closed in accordance with 30.3.1.1.

30.3.1.1 Method I. Domestic and domestic/fire retardant fiberboard boxes shall, as a minimum, be closed in conformance with the requirements of Rule 41 of the Uniform Freight Classification and item 222 of the National Motor Freight Classification. Adhesive, when used, shall be that used in normal commercial practice.

30.3.1.2 Method II. Domestic fiberboard boxes shall be set up by the application of glue or hot melt adhesive in accordance with Rule 41 of the Uniform Freight Classification and Item 222 of the National Motor Freight Classification, by stitching or stapling with fasteners specified in 3.1.2, or by applying tape in accordance with method 121 of Fed. Std. No. 224. When A-A-1492 or A-A-1671 is used, the tape must be nonstrippable. The final closure shall be accomplished with glue, hot-melt adhesive, or tape as specified above. When specified (see 6.2), method II closure shall be used (see 50.1.4). Unless otherwise specified (see 6.2), the selection of the closure material shall be at the option of the contractor.

30.3.1.2.1 Slotted styles with covers.

30.3.1.2.1.1 Types I and II covers. The types I and II covers shall be assembled as specified in 30.1.2.

30.3.1.2.1.2 Type III interlocking flange style. The interlocking flange box shall be secured as specified in 30.1.2.3.

30.3.1.2.2 Styles FTC, OPF, FPF and TS boxes and folders. Styles FTC, OPF, FPF, and TS boxes and folders shall be closed by taping all seams and joints with minimum 2-inch wide tape conforming to A-A-1492, grade A, B, or C, as applicable, or by reinforcing as specified in 30.5.1.

30.3.2 Class weather-resistant and weather-resistant/fire retar and WWVR boxes. Class weather-resistant and weather-resistant/fire retardant and WWVR boxes shall be securely closed in accordance with method III, IV or V as applicable, or when specified method VI (see 6.2), and as herein specified.

Source: https://assist.dla.mil -- Downloaded: 2016-12-11T10:55Z
Check the source to verify that this is the current version before use.

30.3.2.1 Closure Method .

30.3.2.1.1 Method III, Style RSC, OSC, FOL, SFF, CSSC, and CSOSC slotted boxes. Except as specified in 30.3.2.1.2, 30.3.2.1.3 or 3.3.2.1.4, outer and inner flaps of slotted boxes shall be firmly glued together over not less than 75 percent of the surface area of contact between the flaps. The adhesive used for boxes to be closed by Government agency shall conform with the requirements of MMM-A-250. When boxes are to be closed by a contractor, the adhesive shall conform to 3.1.3 except that the toxicity requirements may be waived when packing items, other than food, that may contact or be in proximity of the adhesive. The adhesive shall be applied within 1/4 inch of the edges of the outer flaps. The bottom flaps or flaps other than the final closure may, in lieu of gluing, be fastened with metal stitches or staples. Metal stitches or staples shall conform to the requirements of 3.1.2.1(a), (b), (c), (d), (f), (g), or (h), or 3.1.2.2(a), (b), (c), (d), or (e). The basic number of stitches required in table IV shall pass through all flaps to be fastened and shall be clinched on the inside of the box, drawing the flaps firmly together. The metal stitches shall be distributed over the areas where outer flaps overlap and where outer flaps overlay inner flaps. One-half of the stitches or staples required shall pass through each of the inner flaps. Additional stitches or staples shall be used as required in 30.3.2.2.

TABLE IV. Basic number of stitches or staples

Inside width of the box (inches)	Basic number of stitches or staples 1-1/4 inch 1/	Basic number of stitches or staples 3/8 thru 1-1/4 inches 2/
Up to 8	8	12
" 10	10	16
" 12	12	20
" 14	16	24
" 16	18	28
" 18	20	32
" 20	22	36
" 22	24	40
" 24	28	44
" 26	30	48

1/ Staples or stitches hardened to not less than equivalent of Rockwell B 90.
2/Staples or stitches need not be hardened to equivalent of Rockwell B 90.

Source: https://assist.dla.mil -- Downloaded: 2016-12-11T10:55Z
Check the source to verify that this is the current version before use.

30.3.2.1.2 Method IV, taping of boxes to be overpacked. Styles RSC and CSSC boxes which are to be overpacked in a container for shipment, may have the top and bottom flaps of the box closed by the application of a 2-inch wide tape, conforming to A-A-1683, or PPP-T-60, type III or IV in lieu of 30.3.2.1. The tape shall be centered over the seam formed by the closure of the outer flaps of the top and bottom and shall extend down over the end panels not less than 2 inches. When the bottom flaps of these boxes are closed as specified in 30.3.2.1.1, taping of the top flaps only is required.

30.3.2.1.3 Method V taping styles RSC, CSSC, and CSOSC boxes to be shipped as exterior containers. when specified (see 6.2) flaps of style RSC, CSSC and CSOSC boxes shall be sealed with minimum 2-inch wide tape conforming to A-A-1683 or type III or IV of PPP-T-60 applied over all seams, corners, and manufacturer's joints. The tape shall be centered over the seams and joints and shall extend over all the corners and edges of the box a minimum of 2 inches onto the adjacent box panels. Tape shall be applied over the lengthwise seam of the outer flaps, sealing the opening of the box and over the manufacturer's joint prior to tape being applied to the edge seams of the box. The tape applied to the manufacturer's joint shall cover the joint but need not extend over the corners of the box onto the adjacent panels.

30.3.2.1.4 Method VI, hot melt. When specified (see 6.2) the flaps shall be closed in accordance with method II for hot melt (thermoplastic).

30.3.2.2 Style OSC, FOL, CSSC, and CSOSC boxes. Overlap style slotted boxes shall be closed in accordance with 30.3.2.1. When the bottom flaps of the boxes are closed by stitching or stapling, as specified, and the inner flaps gap by more than 3 inches, additional stitches or staples, on approximately 2-1/2 inch centers, shall be driven in a row parallel to and approximately 1/2 to 1 inch from the long edge of the outer flaps for the full length of the gap.

30.3.2.3 Style IC boxes. The top and bottom of the interlocking flange box shall be secured by bans of flat strapping applied horizontally one band width above the center line of the fold. The strapping shall not be less than 3/8 by 0.015 inch, finish A or B, grade 2 of ASTM-D-3953 or type II or III of ASTM-D-3950.

Source: https://assist.dla.mil -- Downloaded: 2016-12-11T10:55Z
Check the source to verify that this is the current version before use.

30.3.2.4 Style DBLCC boxes. The scored and slotted sheets shall be assembled to form the body and covers. The covers may be secured by taping, strapping, or gluing. When adhesive is used, the cover shall be firmly glued to the box body. The adhesive shall conform with the requirements of 3.1.3. When tape is used, it shall be type IV of A-A-1685. The width and number of tape bands to be used shall conform to the requirements of FED-STD-224. When metal or nonmetallic banding is used, it shall conform to the requirements of ASTM-D-3953 or type II or III of ASTM-D-3950, and 30.5.2.

30.3.2.5 Style FTC, OPF, FPF, and TS boxes and folders. Styles FTC, OPF, FPF, and TS boxes and folders shall be closed by taping all seams with minimum 2-inch wide tape conforming to either type III or IV of PPP-T-60 or A-A-1683; in addition, FTC boxes may be closed by banding as specified in 30.5.2. When snaptogether tongue or tuck lock corners are used, reinforcement of the shipping container shall tie as specified in 30.5.2, except that the two girthwise straps shall be positioned over the tongue or tuck locks at each end of the box.

30.3.2.6 Style HSC boxes. Style HSC boxes shall have the bottom closed in accordance with either technique of 30 3 2.1 and the top shall be secured by taping or banding as specified in 30.3.2.5.

30.4 Waterproofing the contents of class weather-resistant ,and weather-resistant/fire retardant and WWVR boxes and waterproof class weather-resistant ,and weather-resistant/fire retardant and WWVR boxes. When the contents of the shipping container are of such a nature that they may be damaged by water, they shall be protected either as specified in 30.4.1 or by having the boxes waterproofed as specified in 30.4.2 (see 6.2).

30.4.1 Waterproofing the contents of shipping containers. Contents shall be waterproofed by the use of individual wraps by case liners. The wrapping material shall conform to the requirements of PPP-B-1055 or type B2, CW-1 or CW-2 of MIL-B-13239. Individual wraps shall have all seams completely sealed with 2-inch wide tape conforming to A-A-1683 or type III or IV of PPP-T-60, color optional; or with an adhesive conforming to MMM-A-260. Case liners shall conform to and be closed in accordance with MIL-L-10547.

Source: https://assist.dla.mil -- Downloaded: 2016-12-11T10:55Z
Check the source to verify that this is the current version before use.

30.4.2 Waterproofing of slotted style boxes. Boxes closed in accordance with method V require no further waterproofing. Slotted style boxes closed other than method V shall be waterproofed by having all seams, corners and manufacturer's joint taped as specified in 30.3.2.1.3.

30.5 Reinforcing requirements (metal, nonmetallic, or tape banding) (see 50.2.3).

30.5.1 Types CF and SF, class domestic and domestic/fire retardant boxes. Unless specifically stated on the order or in the commodity specification, class domestic and domestic/fire retardant boxes shall not be required to be further reinforced by the use of banding. When reinforcing is required, metal banding, pressure-sensitive adhesive filament tape banding, or nonmetallic banding as specified in 30.5.2 and 30.5.4 shall be used. Metal banding material requirements, number, and location shall be as specified for class weather-resistant, weather-resistant/fire retardant, and WWVR boxes. When pressure-sensitive adhesive filament tape banding is used, material requirements shall conform to A-A-1687. The width and application of the tape shall be in accordance with the requirements of the appropriate table and box style method of Fed. Std. Mo. 224. Nonmetallic strapping shall conform to type I, II, or III of ASTM-D-3950 except that buckles (connectors) shall not be used. Number and size of bands shall be as specified in 30.5.4, and table IX.

30.5.2 Types CF AND SF, class weather-resistant and weather-resistant/fire retardant and WWVR boxes. Unless otherwise specified (see 6.2), packed and closed class weather-resistant and weather-resistant/fire retardant and WWVR boxes (shipping containers) shall be reinforced with encircling bands of flat steel conforming to ASTM-D-3953 or nonmetallic strapping conforming to type II or III of ASTM-D-3950 except that buckles (connectors) shall not be used; or tape conforming to type IV of A-A-1685, except when tape is used for subsistence, A-A-1687 may be used. The size of metal and nonmetallic strapping to be used shall be in accordance with table V for type, class, and grade required. When tape is used to reinforce the box, it shall be applied in complete bands and the width shall be in accordance with table VI. The number and position of bands shall be as specified in tables VII and VIII. Banding (including tape) shall not be applied so as to cover or obliterate or interfere with markings or the shipping container. Unless otherwise specified in 30.3.2.1.3, shipping containers closed as specified in method V shall be reinforced with the tape or nonmetallic strapping specified herein.

Source: https://assist.dla.mil -- Downloaded: 2016-12-11T10:55Z
Check the source to verify that this is the current version before use.

TABLE V. METALIC AND NONMETALIC STRAPPING REQUIREMENTS

Gross weight of container and contents (lbs)	ASTM-D-3953, Size of class 1 flat steel strapping, grade 2, organic or zinc coated		ASTM-D-3950 size of nonmetallic strap	
	Type I	Type II	Type II	Type III
Up to 35, Incl.	3/8 x 0.015 1/2 x 0.012 5/8 x 0.010	3/8 x 0.015	3/8 x 0.015 3/8 x 0.018 or 1/4x0.025	7/16 x 0.017 or 1/2 x 0.015
Over 35 to 70 incl.	3/8 x 0.015	3/8 x 0.015	3/8 x 0.015 3/8 x 0.025 or 7/16 x 0.025	7/16 x 0.017 or 1/2 x 0.015
Over 70 to 110 incl.	3/8 x 0.020 1/2 x 0.015	3/8 x 0.020 1/2 x 0.015	1/2 x0.015 3/8 x 0.020 7/16 x 0.025 or 1/2 x 0.022	1/2 x 0.015 7/16 x 017
Over 110 to 225 incl	1/2 x 0.020	1/2 x 0.020 or 5/8 x 0.015	1/2 x 0.020 5/8 x 0.015 or 7/16 x 0.025 1/2 x 0.022	7/16 x 0.023 or 1/2 x 0.020

30.5.2.1 Location, number, and application of banding. Tables VI and VII shall govern the number and direction of reinforcing bands required on boxes. When only one band is required on the box in a given direction, it shall be centered except in the case of lengthwise bands on style RSC or CSSC boxes. On style RSC and CSSC boxes, the lengthwise band shall be applied slightly offset from the seam formed by the top and bottom flaps in the closed position. When two or more bands are used around the box in the same direction, they shall divide the box into units of equal length. Cross banded boxes shall have the longer band applied first. Boxes carrying loads having restricted points of contact shall be banded, wherever practicable, over these points of contact. Bands shall be applied straight and be sufficiently tensioned. Metal bands shall be imbedded into the edges of the box but shall not cut or tear the fiberboard or crush the contents. When a sleeve is specified, the bands shall be applied after the sleeve is placed on the box.

Source: https://assist.dla.mil -- Downloaded: 2016-12-11T10:55Z
Check the source to verify that this is the current version before use.

TABLE VI. Tape banding requirements for weather-resistant, weather-resistant/fire retardant and WWVR boxes

Gross weight of container and contents (lbs)	Number of bands (and sizes in inches) 1	2	3	4	5	6	7	8
Up to 35	1/2	1/2	1/2	1/2	1/2	1/2	1/2	1/2
>35 to 70	3/4	1/2	1/2	1/2	1/2	1/2	1/2	1/2
>70 to 110	1	3/4	3/4	1/2	1/2	1/2	1/2	1/2
>110 to 140	1	1	3/4	1/2	1/2	1/2	1/2	1/2
>140 to 180	-	1	1	3/4	1/2	1/2	1/2	1/2
>180 to 220	-	-	1	1	3/4	3/4	1/2	1/2
Over 220	-	-	-	1	1	1	3/4	3/4

TABLE VII. Required number of reinforcing bands for slotted and FTC boxes

Direction of bands 1/ Lengthwise: Outside width of box	Lengthwise: Number of bands (min.) 3/	Girthwise: Outside length of box	Girthwise: Number of bands (min.) 3/	Horizontal 2/: Outside depth of box	Horizontal 2/: Number of bands (min.) 3/
Inches		Inches		Inches	
Up to 9	None	Up to 20	1	Up to 18	None
> 9 to 18	1	20 to 30	2	18 to 30	1
>18 to 30	2	>30 to 48	3	>30 to 48	2
>30 to 48	3	>48 to 60	4		
> 48 4/		Over 60 4/		Over 48 4/	

1/ Lengthwise - Encircling top, bottom, and ends. Girthwise - Encircling top, bottom, and sides. Horizontal - Encircling sides and ends. See figures for designation of top, bottom, side, and end faces. Note that the location of the openings determines the designation of the panels, rather than normal storage position.

2/ Horizontal bands are only occasionally required. When contents exert severe pressure on vertical score lines, they should be used.

3/ Full telescope-style boxes, having covers not otherwise sealed to bodies, will usually require use of one or more additional bands, both lengthwise and girthwise when dimensions approach the upper range of the size brackets listed in above table. Additional bands, when required, will be specified (see 6.2).

4/ As specified (see 6.2).

Source: https://assist.dla.mil -- Downloaded: 2016-12-11T10:55Z
Check the source to verify that this is the current version before use.

TABLE VIII. Metallic straps required for DBLCC, IC, or HSC boxes

Box length (inches)	Number of straps (box width) 0 inches to 18 inches	18 inches to 30 inches 1/	30 inches to 48 inches 1/
0 to 20	2	3	4
Over 20 to 38	3	4	5
Over 38 to 56	4	5	6
Over 56 to 72	5	6	7
Over 72	6	7	8

1/ One centered lengthwise strap required.
2/ Two equally spaced lengthwise straps required.

30.5.3 Joint strength of metallic and nonmetallic bands. The breaking strength of the joint for metallic straps shall be at least 75 percent of the required breaking strength of the metallic strap. The breaking strength of the joint for non-metallic strapping shall be at least 40 percent of the breaking strength of the nonmetallic band. The strength of the joints shall be tested in accordance with 40.2.1.

30.5.4 Nonmetallic banding.

30.5.4.1 For types CF and SF, class domestic and domestic/fire retardant boxes (see 30.5.1). When specified (see 6.2), class domestic and domestic/fire retardant fiberboard boxes shall be reinforced by the use of nonmetallic banding. The positioning and number of bands shall be as shown in table IX.

TABLE IX. Size of nonmetallic banding (minimum)

Gross weight of box and contents (lbs)	ASTM-D-3950, type I, grade A 1/ Size (inches)	Number and position of bands
0 to 70	1/4 --	1 girthwise (centered)
Over 70 to 110	3/8 --	2 girthwise 2/
Over 110 through 225	1/2 --	2 girthwise 2/

1/ Type II or III nonmetallic bands of ASTM-D-3950 of equivalent strength may be substituted for the type I, grade 2.
2/ Bands shall divide box into units of equal length.

Source: https://assist.dla.mil -- Downloaded: 2016-12-11T10:55Z
Check the source to verify that this is the current version before use.

30.6 Marking of filled containers.

30.6.1 Civil agencies. In addition to any special marking required by the contract or order, shipping containers shall be marked in accordance with Fed. Std. 123. The markings on top loading boxes shall appear on the designated panels parallel to the score line of the opening and on end loading boxes perpendicular to the score line of the opening.

30.6.2 Military requirements. In addition to any special marking required by the contract or order, shipping containers shall be marked in accordance with MIL-STD-129. The markings on top loading boxes shall appear on the designated panels parallel to the score line of the opening and on end loading boxes perpendicular to the score line of the opening.

40. INSPECTION AND TEST PROCEDURES

40.1 Inspection. Boxes shall be inspected to determine compliance with requirements of this appendix. Sampling shall be conducted in accordance with the provisions of MIL-STD-105. Component and material inspection and testing shall be in accordance with 4.2 of this specification (see 40.2.1).

40.1.1 Examination for assembly, closure, and strapping (except joint strength) of boxes. Classification of defects shall be as indicated in the table below. The sample unit for this examination shall be one complete box. The lot shall be expressed in terms of boxes. The inspection level shall be S-3 of MIL-STD-105 with an acceptable quality level (AQL) of 4.0 for major defects and 10.0 for the total defects expressed in terms of defects per 100 units.

Source: https://assist.dla.mil -- Downloaded: 2016-12-11T10:55Z
Check the source to verify that this is the current version before use.

Examine	Defects	Classification Major	Minor
Assembly			
Slotted and double cover boxes (all classes)	Not in accordance with figures and requirements.	X	
	Cover not set up as specified.	X	
FTC boxes			
Class - Domestic and domestic/ fire retardant	Flaps not secured to adjoining wall as specified.	X	
Class - Weather-resistant and weather-resistant /fire retardant & WWVR boxes	Number of staples less than specified 2/.	X	
	Spacing not as specified.	X	
Closure			
Slotted boxes with glue or hot melt adhesive 1/			
Class - Domestic & domestic/fire retardant			
Glue	Less than 25 percent fiber failure of one or more contact surface area of each closure.	X	
	Less than 50 percent but more than 25 percent fiber failure of one or more contact surface areas of each closure		X

Source: https://assist.dla.mil -- Downloaded: 2016-12-11T10:55Z
Check the source to verify that this is the current version before use.

Examine	Defects	Classification Major	Minor
Hot melt adhesive	Less than 8 stripes on each inner flap and less than 3/8 inch wide after compression.	X	
	Stripes not spaced as specified.		X
	Stripe not full length of flap overlap area or coverage is less than 25 percent of the flap contact area.	X	
Class - Weather-resistant and weather-resistant /fire retardant and WWVR boxes			
Glue	Less than 40 percent fiber failure of one or more contact surface areas of each closure.	X	
	Less than 75 percent but more than 40 percent fiber failure of one or more contact surface areas of each closure.		X
Hot melt adhesive	When specified, not applied as specified.	X	
Closure of slotted boxes with staples, stitches or tape			
Stitched 2/	less than 90 percent of required number of effective stitches.	X	
	Less than required number , but not less than 90 percent of required number of effective stitches.		X
	Not securing free edges.	X	
	Spacing not as specified.	X	

Source: https://assist.dla.mil -- Downloaded: 2016-12-11T10:55Z
Check the source to verify that this is the current version before use.

Examine	Defects	Classification Major	Minor
Tape	Not size or type specified.	X	
	less than 75 percent of taped area shows fiber failure.	X	
	More than 25 percent of tape edge curls or does not adhere to box over 1/2 inch from edge of tape	X	
	Tape extension less than specified.		X
	Tape not applied as specified.	X	
Waterproofing	Not waterproofed when required.	X	
	Tape not applied as specified.	X	
Strapping	Size less than specified.	X	
	Missing strap.	X	
	Not properly placed or not applied correctly.		X
	Not applied within 1 inch of right angle to edges.		X
	Torn or cut strap.	X	
	Loose strap.		X
	Tension too great, that is, tears or cuts completely through board facing.		X
Tape banding	Size of bands less than specified.	X	
	Not applied as specified.	X	

1/ Inspector shall check for glue failure in the following manner: Draw samples of sealed boxes and tear flaps apart by wedging fingers between flaps, in center of box and pulling upward. If failures occur and glue is still tacky, repeat test allowing a greater time interval between sealing and testing.

2/ Stitches which are cracked, unclinched or do not penetrate inner and outer flaps shall be a missing stitch for purposes of this examination.

Source: https://assist.dla.mil -- Downloaded: 2016-12-11T10:55Z
Check the source to verify that this is the current version before use.

40.2 Tests.

40.2.1 Joint strength. Three separate joint specimens shall be taken from one or more sample containers of each lot of strapped boxes submitted for inspection. The joints of metal strapping shall be tested in accordance with Method 2044 of FED-STD-101. Nonmetallic strapping joints shall be tested in accordance with ASTM-D-3950. If the breaking strength of one of the three samples is less than the requirements, It shall be cause for rejection of the lot.

50. NOTES (Also see section 6)

50.1 Usage factors.

50.1.1 Slotted style boxes (end or side opening). In many instances, slotted boxes are required to have top and bottom loading on the faces of the box which would ordinarily be either the end (see 50.2.5), or the side of the box. This is done primarily to save fiberboard or to facilitate loading.

50.1.2 Full telescope box. Boxes having covers are used for packing large volume items or items which will compress in shipment. The container bodies with the covers removed make ideal distribution boxes.

50.1.3 Waterproofing. Preparation of contents, interior, or exterior containers, to protect the packed items or containers from free moisture.

50.1.4 Closure of class domestic and domestic/fire retardant boxes (see 30.3).

50.1.4.1 Method I. Closure method I for domestic fiberboard boxes provides a minimum standard for applicable caper rules and regulations governing direct shipment from the supply source to the first receiving activity for immediate use. When specified (see 6.2), closure method I may be used for boxes to be palletized or unitized for shipment where storage and redistribution is expected through the depot supply system.

50.1.4.2 MethodII. Closure method II for domestic and domestic/fire retardant fiberboard boxes describes a method of closure for shipment where storage and redistribution is expected through the depot supply system.

Source: https://assist.dla.mil -- Downloaded: 2016-12-11T10:55Z
Check the source to verify that this is the current version before use.

50.1.5 Closure of class weather-resistant and weather-resistant/fire retardant and WWVR boxes (see 30.3.2).

50.1.5.1 Method III. Closure method III for weather-resistant and weather-resistant/fire retardant and WWVR fiberboard boxes describes a method of closure for shipment where storage and redistribution is expected throughout the depot supply system, unless otherwise specified in 50.1.5.2.

50.1.5.2 Methods IV, V, and VI. Closure methods IV, V, and VI for weather-resistant and weather-resistant/fire retardant and WWVR fiberboard boxes describes methods of closure, as specified, for boxes to be unitized or palletized or when known handling and distribution permit.

50.2 Definitions.

50.2.1 Closure. Fastening the flaps of the box firmly together by gluing, stitching or taping for the purpose of maintaining the flaps of the box in a closed position.

50.2.2 Sealing. Covering, the body joint, seams and corner openings with tape to prevent spilling of contents or entrance of water, moisture, or other foreign matter.

50.2.3 Reinforcement. Strengthening a box by encircling bands girthwise, lengthwise, and horizontally around the box.

50.2.4 Top of box. That surface which, when the filled container is in storage or transit, is intended as the uppermost face of the box.

50.2.5 Ends of box. The surfaces which, when filled container is in storage or transit, are intended to be the smaller two of the four surfaces vertical to the floor.

Source: https://assist.dla.mil -- Downloaded: 2016-12-11T10:55Z
Check the source to verify that this is the current version before use.