INCH-POUND

MIL-B-81705C
25 January 1989
SUPERSEDING
MIL-B-81705B
15 August 1974

MILITARY SPECIFICATION

BARRIER MATERIALS, FLEXIBLE, ELECTROSTATIC PROTECTIVE, HEAT SEALABLE

This specification is approved for use by all Departments and Agencies of the Department of Defense.

1. SCOPE

1.1 Scope. This specification covers heat sealable, electrostatic protective, flexible barrier materials for the packaging of items such as microcircuits, sensitive semiconductor devices, sensitive resistors, and associated higher assemblies. In addition, the type I materials provide for watervaporproof protection and attenuation of electromagnetic radiation (see 6.1.1).

1.2 Classification. The barrier materials shall be of the following types and classes as specified.

Type I - Watervaporproof, electrostatic protective, electrostatic and electromagnetic shielding.

Class 1 - Unlimited use.

Class 2 - For use on automated bag making machines only.

Type II - Transparent, waterproof, electrostatic protective, static dissipative.

Class 1 - Unlimited use.

Class 2 - For use on automated bag making machines only.

Type III - Transparent, waterproof, electrostatic protective, electrostatic shielding.

Class 1 - Unlimited use.

Class 2 - For use on automated bag making machines only.

Beneficial comments (recommendations, additions, deletions) and any pertinent data which may be of use in improving this document should be addressed to: Systems Engineering and Standardization Department (Code 53), Naval Air Engineering Center, Lakehurst, NJ 08733-5100, by using the self-addressed Standardization Document Improvement Proposal (DD Form 1426) appearing at the end of this document or by letter.

AMSC N/A FSC 8135

DISTRIBUTION STATEMENT A: Approved for public release; distribution is unlimited.

Source: https://assist.dla.mil -- Downloaded: 2016-10-21T12:17Z
Check the source to verify that this is the current version before use.

2. APPLICABLE DOCUMENTS

2.1 Government documents.

2.1.1 Specifications and standards. The following specifications and standards form a part of this document to the extent specified herein. Unless otherwise specified, the issues of these documents are those listed in the issue of the Department of Defense Index of Specifications and Standards (DODISS) and supplement thereto, cited in the solicitation (see 6.2).

SPECIFICATIONS

Federal

QQ-S-571	Solder; Tin Alloy, Tin Lead Alloy and Lead Alloy
PPP-B-601	Boxes, Wood, Cleated-Plywood
PPP-B-621	Box, Wood, Nailed and Lock-Corner
PPP-B-636	Boxes, Shipping, Fiberboard
PPP-B-640	Boxes, Fiberboard, Corrugated, Triple-Wall
PPP-D-723	Drum, Fiber
PPP-F-320	Fiberboard, Corrugated and Solid, Sheet Stock (Container Grade) and Cut Shapes
PPP-T-60	Tape, Packaging Waterproof
PPP-T-76	Tape, Pressure-Sensitive Adhesive Paper (for Carton Sealing)
PPP-T-97	Tape, Pressure-Sensitive Adhesive, Filament Reinforced

Military

MIL-S-4461	Sealing Machine, Heat, Hot Jaw and Continuous
MIL-S-22783	Sealing Machines, Electrical Impulse (Jaw Type)

STANDARDS

Federal

Fed. Test Method Std. No. 101	Test Procedures for Packaging Materials
FED-STD-376	Preferred Metric Units for General Use by the Federal Government

Source: https://assist.dla.mil -- Downloaded: 2016-10-21T12:17Z
Check the source to verify that this is the current version before use.

Military

MIL-STD-105	Sampling Procedures and Tables for Inspection by Attributes
MIL-STD-129	Marking for Shipment and Storage

(Unless otherwise indicated, copies of federal and military specifications and standards are available from the Naval Publications and Forms Center (Attn: NPODS), 5801 Tabor Avenue, Philadelphia, PA 19120-5099.)

2.2 Non-Government publications. The following documents form a part of this document to the extent specified herein. Unless otherwise specified, the issues of the documents which are DOD adopted are those listed in the issue of the DODISS cited in the solicitation. Unless otherwise specified, the issues of documents not listed in the DODISS are the issue of the documents cited in the solicitation (see 6.2).

AMERICAN SOCIETY FOR TESTING AND MATERIALS (ASTM)

ASTM B 451	Specification for Copper Foil, Strip, and Sheet for Printed Circuits and Carrier Tapes
ASTM D 257	D-C Resistance or Conductance of Insulating Materials
ASTM D 471	Rubber Property - Effect of Liquids
ASTM F 15	Iron-Nickel-Cobalt Sealing Alloy
ASTM F 34	Standard Test Method for Liquid Extraction of Flexible Barrier Materials

(Application for copies should be addressed to the American Society for Testing and Materials, 1916 Race Street, Philadelphia, PA 19103.)

ELECTRONIC INDUSTRIES ASSOCIATION

EIA-541	Packaging Material Standards for ESD Sensitive Items

(Application for copies should be addressed to the Electronic Industries Association, Engineering Department, 2001 Eye Street, NW, Washington, DC 20006.)

UNIFORM CLASSIFICATION COMMITTEE, AGENT

Uniform Freight Classification

(Application for copies should be addressed to the Uniform Classification Committee, Room 1106, 222 South Riverside Plaza, Chicago, IL 60606.)

NATIONAL MOTOR FREIGHT TRAFFIC ASSOCIATION, INC., AGENT

National Motor Freight Classification

Source: https://assist.dla.mil -- Downloaded: 2016-10-21T12:17Z
Check the source to verify that this is the current version before use.

(Application for copies should be addressed to American Trucking Association, Traffic Department, 2200 Mill Road, Alexandria, VA 22314.

2.3 Order of precedence. In the event of a conflict between the text of this document and the references cited herein, the text of this document takes precedence. Nothing in this document, however, supersedes applicable laws and regulations unless a specific exemption has been obtained.

3. REQUIREMENTS

3.1 Qualification. The barrier materials furnished under this specification shall be products which are authorized by the qualifying activity for listing on the applicable Qualified Products List at the time of award of contract (see 4.2 and 6.3).

3.2 Material. Barrier materials shall be made from such materials and by such processes as to insure compliance with this specification.

3.3 Construction.

3.3.1 Type I. Type I barrier material shall consist of a metal foil and/or other laminates constructed in any manner that will ensure compliance with the performance requirements of this specification and which will be suitable for the purpose intended. Butting of component materials or the finished product is not permitted except in the direction perpendicular to the rolling direction. The areas shall be plainly externally flagged to prevent use of that portion of the roll when a butt weld is made on the finished product, or its components.

3.3.2 Type II. Type II barrier material shall be transparent, clear or tinted any color, uniform in appearance and structured in any manner that will ensure compliance with the performance requirements of this specification and be suitable for the purpose intended. The materials shall have no talc or other powdered substances applied to the surfaces.

3.3.3 Type III. Type III barrier material shall be transparent, clear or tinted any color, uniform in appearance and structured in any manner that will ensure compliance with the performance requirements of this specification and be suitable for the purpose intended. Butting of component materials or the finished product is not permitted except in the direction perpendicular to the rolling direction. The areas shall be plainly externally flagged to prevent use of that portion of the roll when a butt weld is made on the finished product, or its components.

3.3.4 Splices. No roll shall contain more than 3 splices (4 pieces), and no piece shall be less than 45 yards in length. Splices, within rolls, shall be evenly and neatly made the entire width of the roll material and shall not come apart during unwinding. Rolls containing splices shall be flagged at both ends of each splice with colored markers to indicate splices within the roll. Barrier material in flat cut sheet form shall contain no splices.

Source: https://assist.dla.mil -- Downloaded: 2016-10-21T12:17Z
Check the source to verify that this is the current version before use.

3.4 Form. The barrier materials shall be furnished in rolls or flat cut sheets as specified in the contract or purchase order (see 6.2). Rolls of Type II and Type III material may be in the form of sheeting or lay flat tubing as specified (see 6.2).

3.4.1 Rolls. When rolls are specified, the average roll length shall not be less than 200 yards. The length of any individual roll shall not be less than 195 yards. Unless otherwise specified, the width of roll material shall be 36 inches, plus or minus 1/4 inch. The roll material shall be uniformly and smoothly wound on non-returnable cores with a minimum inside diameter of 3 inches with a plus tolerance of 1/8 inch. The length of the core shall be equal to the width of the roll material, with a plus tolerance of 1/8 inch. The core shall be of sufficient rigidity to prevent distortion of the roll under normal conditions during transportation, storage and use. Each roll shall be suitably restrained to prevent unwinding.

3.4.2 Flat cuts. When flat cut sheets are specified, the length and width shall be as specified by the procuring activity. Unless otherwise specified, length and width tolerances for cut sheets shall be plus 1/4 inch or minus 1/8 inch. Flat cut sheets shall be evenly and uniformly stacked.

3.5 Sealing. Barrier materials shall be capable of being sealed under conditions recommended by the manufacturer. These sealing conditions shall be limited to those considered reasonable for production line sealing operations with commonly available sealing equipment and commercially practical fabrication time. If the material can be sealed only on one side, the material shall exhibit no delamination at the sealed area when sealed under the manufacturer's recommended conditions (see 4.7). Each roll or unit pack (flat cut) of material shall include a tag secured to the core of rolls or sheet inserted in the unit pack of sheets with the sealing conditions recommended by the manufacturer. The tag or sheet shall be visible upon opening the unit pack.

3.6 Identification of material. The material under contract or order shall be marked with two groups of markings in block form and in machine direction. The markings shall provide permanent identification of the special properties of the material as well as the source of its manufacture. The first group shall state the specification number, type, class, manufacturer's name, manufacturer's designation, month and year of manufacture and lot number. The letters and figures shall be clear, legible and a minimum of one-eighth of an inch high. The second group shall identify the protective qualities of the materials as follows: For type I - EMI/STATIC SHIELD, for type II - STATIC DISSIPATIVE and for type III - STATIC SHIELD. These letters shall be a minimum of one-half inch high. The two groups of markings on all three types of material shall be either printed using a water-resistant ink or embossed and shall be visible if the material is fabricated into a bag or pouch. The two groups of markings shall be printed or embossed sequentially, complete and continuous lengthwise with a space of approximately one inch between groups. A complete group of markings shall appear once in each six inches of width of the roll and flat cut. An example of the identification is as follows:

Source: https://assist.dla.mil -- Downloaded: 2016-10-21T12:17Z
Check the source to verify that this is the current version before use.

MIL-B-81705C TYPE II CLASS 1
MFR NAME MFR DESIGNATION
DATE LOT NO.

APPROX 1" **STATIC DISSIPATIVE** MINIMUM

3.7 Performance. The performance of the barrier materials shall conform to the requirements specified in Table I, when tested as described in 4.8.

3.8 Workmanship. Barrier material shall be manufactured in a manner to provide uniform construction, free from holes, tears, cuts, sharp creases, wrinkles or other imperfections which might impair its usefulness for the purpose intended. The barrier material shall be trimmed of any selvage and the finished product shall conform to the levels of quality established herein.

4. QUALITY ASSURANCE PROVISIONS

4.1 Responsibility for inspection. Unless otherwise specified in the contract or purchase order, the contractor is responsible for the performance of all inspection requirements (examinations and tests) as specified herein. Except as otherwise specified in the contract or purchase order, the contractor may use his own or any other facilities suitable for the performance of the inspection requirements specified herein, unless disapproved by the Government. The Government reserves the right to perform any of the inspections set forth in this specification where such inspections are deemed necessary to ensure supplies and services conform to prescribed requirements.

4.1.1 Responsibility for compliance. All items must meet all requirements of Sections 3 and 5. The inspection set forth in this specification shall become a part of the contractor's overall inspection system or quality program. The absence of any inspection requirements in the specification shall not relieve the contractor of the responsibility of ensuring that all products or supplies submitted to the Government for acceptance comply with all requirements of the contract. Sampling inspection, as part of manufacturing operations, is an acceptable practice to ascertain conformance to requirements, however, this does not authorize submission of known defective material, either indicated or actual, nor does it commit the Government to accept defective material.

4.2 Classification of inspection. The inspection requirements specified herein are classified as follows:

a. Qualification inspection (see 4.3). The qualification inspection tests of the barrier material shall consist of all the tests of this specification.

b. Quality conformance inspection (see 4.4). The quality conformance inspection tests shall consist of the tests listed in 4.6 and examinations listed in 4.5.

Source: https://assist.dla.mil -- Downloaded: 2016-10-21T12:17Z
Check the source to verify that this is the current version before use.

TABLE I. Performance requirements.

Properties	Applicable to types	Requirements	Test para.
Seam strength As received material At room temperature, 100°F, 160°F Sealed before aging At room temperature, 100°F, 160°F Sealed after aging At room temperature, 100°F, 160°F	I, II, III	No separation	4.8.1
Seam fabrication	I, II, III	No leakage at double seam junction	4.8.2
Resistance to curl	I, II, III (Class 1 only)	Shall not curl in excess of 5% or curl back upon itself	4.8.3
Resistance to blocking	I, II, III	No blocking, delamination or rupture	4.8.3
Contact corrosivity	I, II, III	No corrosion, etching or pitting in contact area	4.8.3
Resistance to aging	I, II, III (laminated only)	No delamination as defined in 4.8.4.1	4.8.4
Thickness	I II, III	0.015 inch (max) 0.006 inch (max)	4.8.3 4.8.3
Water resistance of markings	I, II, III (printed only)	Markings shall be clear, legible	4.8.3
Marking abrasion resistance	I, II, III	No smearing, blurring or loss of legibility	4.8.7
Water resistance	I, II, III (laminated only)	No delamination	4.8.3
Transparency	II, III	Read lettering, 3 inches behind material	4.8.3

Source: https://assist.dla.mil -- Downloaded: 2016-10-21T12:17Z
Check the source to verify that this is the current version before use.

TABLE I. Performance requirements (Continued).

Properties	Applicable to types	Requirements	Test para.
Water vapor transmission rate (WVTR) gms/100 sq. in./24 hours	I		4.8.3
After room temperature flexing			
As received	I	0.02 (max)	
After aging	I	0.02 (max)	
After low temperature flexing			
As received	I	0.03 (max)	
Delamination	I, II, III (laminated only)	No leakage, swelling, delamination or embrittlement	4.8.3
Waterproofness	II, III	No dye penetration	4.8.5
Puncture resistance	I	Minimum force 10.0 pounds to puncture	4.8.3
	II, III	Minimum force 6.0 pounds to puncture	
Static decay	I, II, III	The decay rate shall not exceed 2.00 seconds	4.8.3
Electromagnetic interference (EMI) attenuation	I	25 dB (min)	4.8.6
	III	10 dB (min)	
Surface resistivity	I, II, III	Inner: Greater than or equal to $1x10^5$ ohms/sq but less than $1x10^{12}$ ohms/sq Outer: Less than $1x10^{12}$ ohms/sq	4.8.8
Static shielding	I, III	30V peak (max)	4.8.9

Source: https://assist.dla.mil -- Downloaded: 2016-10-21T12:17Z
Check the source to verify that this is the current version before use.

4.3 Qualification Inspection.

4.3.1 Qualification sampling instructions. Qualification inspection samples shall consist of a roll of barrier material approximately 50 yards long and 36 inches wide. Samples shall be accompanied by a complete test report showing results of manufacturer's tests. Information shall be furnished including plant address(es), as to the plant(s) in which the barrier material is, or will be manufactured. If more than one address is listed, a certificate of equivalence of other plants to the plant in which the sample was manufactured must be furnished. The samples shall be forwarded to the Commander, Naval Air Development Center, Aerospace Materials Division, Attention: Code 60611, Warminster, PA 18974; samples shall be plainly identified by securely attached durable tags marked with the following information:

Sample for Qualification Tests
BARRIER MATERIALS, Flexible, Electrostatic Protective, Heat Sealable
Manufacturer's Name
Manufacturer's Code No.
Type
Class
Date of Manufacture (Month and Year)
Submitted by (Name) (Date) for Qualification Tests in Accordance with Requirements of Specification MIL-B-81705C Under Authorization (Reference Authorizing Letter)

4.3.2 Criteria for qualification tests. The criteria for approval or rejection of the qualification sample is based on the results of each individual test and is listed in Table I.

4.3.3 Retention of qualification. The retention of qualification of products approved for listing on the Qualified Products List (QPL) shall be maintained by periodic certification to determine compliance of the qualified product with the requirements of this specification. Unless otherwise specified by the activity responsible for the Qualified Products List, periodic verification shall be by certification and such certification shall be at intervals not exceeding two years.

4.3.4 Retest. Material rejected by the Government testing agency for failure to meet the requirements of this specification shall not be retested for qualification at the request of the manufacturer unless evidence is furnished that changes have been made in the material.

Source: https://assist.dla.mil -- Downloaded: 2016-10-21T12:17Z
Check the source to verify that this is the current version before use.

TABLE II. Sample size and acceptance criteria.

Inspection or characteristic	Rqmt. para.	Test method	Results rpt. as	Inspection level	AQL defects per 100 units
Examination of appearance and workmanship	4.5	--	--	S-3	4.0
Examination of rolls or packages of flat cuts	4.5	--	--	S-3	4.0
Examination of packaging	4.5	--	--	S-3	4.0
Quality conformance tests	Table I	4.6	Pass or fail or as applicable.	S-1	Acceptance number zero. Rejection number one.

4.4 Quality conformance inspection. Quality conformance inspection shall be in accordance with MIL-STD-105 except where otherwise indicated. The contractor shall furnish all samples. Unless otherwise specified, the contractor shall be responsible for accomplishing the required quality conformance tests listed in 4.6 and examinations listed in 4.5. Check tests may be performed at the discretion of the inspection activity at a Government laboratory for information, verification and correlation purposes. Quality conformance testing will be performed at a designated laboratory when results of check tests so warrant. The contractor shall furnish test reports showing quantitative results for all quality conformance tests required by this specification for each lot of material. Any function specified herein for accomplishment by the Government will be interpreted to mean function to be accomplished either by or under the supervision of the Government.

4.4.1 Quality conformance inspection sampling.

4.4.1.1 Inspection lot. A quality inspection test lot shall consist of either 50,000 square yards of material or all material manufactured by the same process from the same components during one production run, whichever is the lesser.

4.4.1.2 Samples for test. For the purpose of maintaining continuous testing, test samples shall be taken immediately following manufacture or from material packed for shipment. The lot shall be divided into five equal segments. Five sample rolls shall be drawn from the lot for test, one roll from each lot segment. A six square yard test sample shall then be drawn from each of the five rolls selected. Each test sample shall be assigned a number from one to five in order of manufacture. In the event the material is being procured in the form of flat cuts, six yard samples of material from the lot represented shall be furnished for performing the tests.

Source: https://assist.dla.mil -- Downloaded: 2016-10-21T12:17Z
Check the source to verify that this is the current version before use.

4.4.1.3 Preparation for delivery. The lot size shall be expressed in units of shipping containers fully packed and selected prior to the sealing and tying operation.

4.4.1.4 Samples and acceptance criteria. The sample size and acceptance criteria shall be as specified in Table II. Sampling and acceptance or rejection shall be in accordance with MIL-STD-105.

4.5 Methods of inspection. Unless otherwise specified by the procuring activity having separate test instructions, examination of the end item shall be in accordance with the list of defects and Acceptable Quality Levels (AQLs) set forth in Table II. The Government reserves the right to require examination for any defect prohibited in Section 3 or in the contract or purchase order even though it is not listed below, and to classify such defects in accordance with the definitions contained in MIL-STD-105. Facilities shall be made available to the Government inspector for conducting the examinations prescribed herein.

4.5.1 Examination of the end item for defects in appearance and workmanship. The sample unit for this examination shall be expressed in units of square yards of barrier material. Samples for examination shall be selected in accordance with Table II. Sufficient rolls shall be selected at random so that by examining approximately 15 yards per roll, the required yardage will be obtained. For examination of sheets, samples shall be scored only once for each occurrence within a square yard.

EXAMINE	DEFECTS
Check both sides of barrier material	
Form	Not rolled or flat cut, as specified
Cleanness 1/	Not clean
Workmanship	Delamination Embrittlement Any hole Any tear Any cut Any chafed spot Other defects that would impair usefulness of barrier material
Construction	Not uniform - Pinholes, cracks, blisters, scratches, mottling, wrinkles, folds, foreign matter, fish eyes, gels Type not as specified

Source: https://assist.dla.mil -- Downloaded: 2016-10-21T12:17Z
Check the source to verify that this is the current version before use.

EXAMINE	DEFECTS
Identification of material	Not in machine direction Parallel rows over 6 inches apart Markings less than 1/8 inch or 1/2 inch, as applicable Markings not legible to naked eye at distance of 12 inches Longitudinal spacing between groups of markings greater than one inch

1/ This defect does not apply to outer convolution of roll.

4.5.2 Examination of the end item for defects related to the roll or package of flat cuts. The sample unit for this examination shall be expressed in units or packages of flat cuts. Samples for examination shall be selected in accordance with Table II.

EXAMINE	DEFECTS
Roll width	More than 36-1/4 inches Less than 35-3/4 inches
NOTE: When other roll widths are specified, a tolerance of ± 1/4 inch shall be allowed.	
Roll length	Length of roll under 195 yards or average under 200 yards
Unwinding of rolls	When unwound, material sticks together to the extent that unrolling causes tearing or injury to surfaces Material not wound evenly Telescoping Rolls not wound on cores Inside diameter of core less than 3 inches or more than 3-1/8 inches Cores crushed, broken, mutilated or collapsed
Flat cut width	More than specified width by more than 1/4 inch Less than specified width by more than 1/8 inch
Flat cut length	More than specified length by more than 1/4 inch Less than specified length by more than 1/8 inch
Sealing conditions	Missing instruction tag or sheet

Source: https://assist.dla.mil -- Downloaded: 2016-10-21T12:17Z
Check the source to verify that this is the current version before use.

4.5.3 Examination of packaging. The lot size shall be expressed in units of shipping containers (1 drum per roll; and bundle of flat cuts), and the sample unit shall be one shipping container, fully packed and selected prior to the sealing or tying operation.

EXAMINE	DEFECTS
Preservation (as applicable)	Not level specified; not in accordance with contract requirements. Flat cuts not unit packaged and wrapped in bundles as specified; fiberboard pad(s) omitted from top or bottom of stack, or not of sufficient size to protect flat cuts; ties (tape, twine, or rope) not applied in manner specified. Packaging material not as specified; closures not in accordance with specified or required methods or materials.
Packing (as applicable)	Not level specified; not in accordance with contract requirements. Rolls not packed in fiber drums, as specified. Arrangement or number of rolls or bundles of flat cuts per container not in accordance with requirements. Container materials not as specified; closures not in accordance with specified or required methods or materials.
Markings	Interior or exterior markings (as applicable) illegible, incorrect, omitted, or not in accordance with requirements. Precautionary markings omitted or not as specified (see 5.4).
Weight	Weight exceeds requirements.

4.5.4 Source of material used for examination. The same rolls or packages of flat cuts shall be used for examinations under 4.5.1 and 4.5.2.

Source: https://assist.dla.mil -- Downloaded: 2016-10-21T12:17Z
Check the source to verify that this is the current version before use.

4.6 Quality conformance tests.

PROPERTY	TEST SAMPLE ROLL NUMBER (SEE 4.4.1.2)
Seam strength	
As received	1
Water vapor transmission rate (Type I only)	
As received	2 and 5
After aging	1 and 4
Delamination (laminated only)	2 and 5
Static decay (Type II only)	4
Surface resistivity (interior and exterior)	4
Static shield (Type I and III)	4
Puncture resistance	4

4.6.1 In addition, the barrier material may be subjected to the other tests specified herein which the procuring activity considers necessary to insure conformance with all of the requirements of this specification.

4.7 Sealing instructions for qualification and quality conformance testing.

(a) Heat seals for test purposes shall be a minimum of 1/2 inch wide and shall be effected on a jaw-type heat sealer conforming to MIL-S-4461, having one heated jaw and one resilient unheated jaw, utilizing the sealing conditions recommended by the manufacturer. The upper sealing condition limits on this type sealer, which are considered reasonable for production line sealing operations with respect to commonly available sealing equipment and commercially practical fabrication time, are a temperature setting of 525°F, a 3-second dwell time, and an effective jaw pressure of 60 pounds per square inch. #

(b) Impulse seals for test purposes shall be a minimum of 1/16 inch wide and shall be effected on impulse type sealers conforming to MIL-S-22783. The upper sealing limits on this type sealer shall be sufficiently high to effect a satisfactory seal and not cause thinning at the inside edges of the seal.

(c) In the securing of the three 1-inch seam strength specimens (see 4.8.1.1.1) care should be taken that the specimens are not removed from:

(1) Points in the sealed sample where seal overlapping has occurred.

Source: https://assist.dla.mil -- Downloaded: 2016-10-21T12:17Z
Check the source to verify that this is the current version before use.

(2) Points in the sealed sample which were within 1 inch of either end of the sealer jaw during the sealing operation.

#NOTE: Normally, the manufacturer's recommendation will be less. For example, for Type I material setting may be as follows: temperature 300°F, dwell time 2 seconds and jaw pressure 40 pounds per square inch.

4.7.1 Test conditions. Unless otherwise specified in the detail test method herein, the physical tests contained in this specification shall be made under the controlled atmospheric conditions stated below. For the purposes of this specification barrier material in controlled atmospheric condition is defined as barrier material which is in moisture equilibrium with an atmosphere having a relative humidity (RH) of 50 ± 5 percent, and a temperature ranging from 73 ± 3.5°F (23 ± 5°C). Barrier material shall be considered in equilibrium after 24 hours free exposure to the specified atmosphere in motion.

4.8 Test methods.

4.8.1 Seam strength.

4.8.1.1 Preparation of test specimens. Six by twelve-inch sections for this test shall be selected from the applicable samples as shown in Figure 1. Samples shall be drawn in duplicate for Type II and Type III materials. Heat seals shall be applied to one set of samples, and for Type II and Type III materials only, impulse seals shall be applied to the other set. Test specimens shall be obtained as follows:

4.8.1.1.1 Seam strength (As received).

(a) A 6- by 12-inch sample shall be folded in half with crease parallel to long axis.

(b) The open or unfolded length shall be sealed.

(c) The sealed area shall be defined by a line drawn on the back of the specimen.

(d) Three adjacent 1-inch specimens shall be cut perpendicular to the seam (see 4.7(a) and (b)). Remaining portion of 6- by 12-inch sample shall be set aside for retest purposes. These three specimens shall be used, one for the room temperature test, one for the 100°F test, and the remaining specimen for the 160°F test.

4.8.1.1.2 Seam strength (Sealed before aging).

(a) Repeat (a), (b) and (c) of 4.8.1.1.1.

(b) After (c), the 6- by 12-inch specimen shall be placed in a circulating air oven maintained at 160 ± 2°F for 12 consecutive days. After aging, remove the specimens from the oven, and condition as specified in 4.7.1 and repeat (d) of 4.8.1.1.1.

Source: https://assist.dla.mil -- Downloaded: 2016-10-21T12:17Z
Check the source to verify that this is the current version before use.

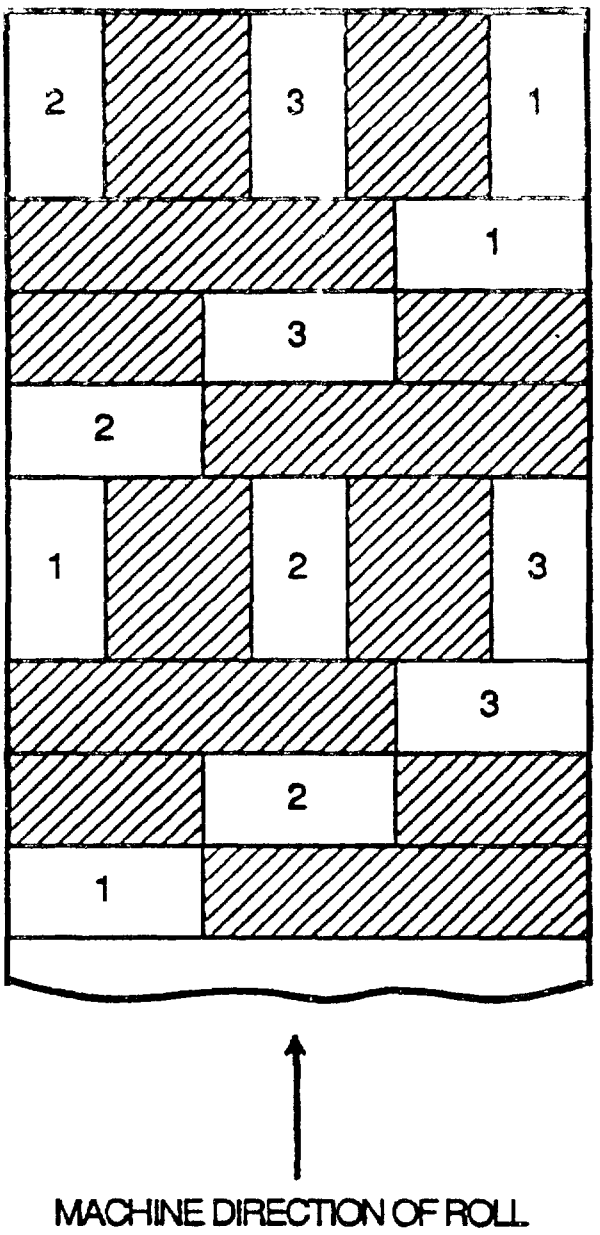

KEY

1. 6 by 12 inch sample for As received testing.
2. 6 by 12 inch sample for Sealed before aging testing.
3. 6 by 12 inch sample for Sealed after aging testing.

FIGURE 1. Sampling method for seam strength test.

Source: https://assist.dla.mil -- Downloaded: 2016-10-21T12:17Z
Check the source to verify that this is the current version before use.

4.8.1.1.3 Seam strength (Sealed after aging).

(a) Suspend flat, unsealed, unfolded 6- by 12-inch samples in a circulating air oven maintained at 160 ± 2°F for 12 consecutive days. After aging, remove specimens from oven and condition as specified in 4.7.1, and repeat (a) to (d) of 4.8.1.1.1, inclusive.

(b) Sufficient number of specimens shall be prepared to conduct each phase of the test in quadruplicate. In all cases, the specimens shall be conditioned for one hour at the conditions specified in 4.7.1 after sealing and prior to application of the specified weights.

4.8.1.2 Seam strength (As received).

4.8.1.2.1 Test at room temperature. The four 1 inch wide specimens prepared as in 4.8.1.1.1 shall be opened and one end of each specimen shall be clamped so that the other end of the specimen hangs free. A 3-1/2 pound ± 1/2 ounce weight shall then be gently attached to the free end of the specimen so as not to impact load the seal. The weight shall be allowed to act for 5 minutes, whereupon the weight shall be removed and the specimen examined for separation of the heat seal faces. The evaluation shall be limited to the area as defined in 4.8.1.1.1(c).

4.8.1.2.2 Test at 100°F. The four 1 inch wide specimens prepared as in 4.8.1.1.1 shall be tested as for room temperature except that specimens shall be clamped in a circulating air oven maintained at 100 ± 2°F with a weight of 2 pounds ± 1/2 ounce acting on the free end of the specimen for one hour. The rate of air circulation should be held to a minimum consistent with maintaining uniform temperature throughout the oven. In no case shall the volume be such as to cause movement of the weighted specimen. After one hour the weight shall be removed and the specimen examined for separation of the heat seal faces, within the heat seal area as defined in 4.8.1.1.1(c).

4.8.1.2.3 Test at 160°F. The four 1 inch wide specimens prepared as in 4.8.1.1.1 shall be tested as for those of 100°F except that the weight shall be 10 ounces ± 1/2 ounce and the temperature in the circulating air oven shall be 160 ± 2°F. The rate of air circulation shall be as stated in 4.8.1.2.2 and the evaluation of the heat seal faces shall be within the area defined in 4.8.1.1.1(c).

4.8.1.3 Seam strength (Sealed before aging).

4.8.1.3.1 Test at room temperature. The four 1 inch specimens prepared as in 4.8.1.1.2 shall be tested as specified in 4.8.1.2.1.

4.8.1.3.2 Test at 100°F. The four 1 inch wide specimens prepared as in 4.8.1.1.2 shall be tested as specified in 4.8.1.2.2.

4.8.1.3.3 Test at 160°F. The four 1 inch wide specimens prepared as in 4.8.1.1.2 shall be tested as specified in 4.8.1.2.3.

Source: https://assist.dla.mil -- Downloaded: 2016-10-21T12:17Z
Check the source to verify that this is the current version before use.

4.8.1.4 Seam strength (Sealed after aging).

4.8.1.4.1 Test at room temperature. The four 1 inch wide specimens prepared as in 4.8.1.1.3 shall be tested as specified in 4.8.1.2.1.

4.8.1.4.2 Test at 100°F. The four 1 inch wide specimens prepared as in 4.8.1.1.3 shall be tested as specified in 4.8.1.2.2.

4.8.1.4.3 Test at 160°F. The four 1 inch wide specimens prepared as in 4.8.1.1.3 shall be tested as specified in 4.8.1.2.3.

4.8.2 Seam fabrication

4.8.2.1 Preparation of test specimens. Four pouches sealed in accordance with the manufacturer's recommended sealing conditions shall be fabricated from the barrier material. Each pouch shall be prepared by cutting four specimens (two, 2-1/2 by 5-1/2 inches and two, 5-1/2 by 5-1/2 inches). The pouch shall be fabricated by sealing in conformance with Figure 2.

4.8.2.2 Procedure. A water solution containing 1 percent Aerosol O.T. (Dioctyl Sodium Sulfosuccinate) or equivalent and sufficient dye to produce a distinct color shall be poured into each sealed pouch to a level of two inches above the top of the bottom seam. The pouch shall then be suspended vertically. After a period of 15 minutes at room temperature the pouches shall be examined for dye leakage at the double seam junctions, i.e., the points where the vertical seams intersect the bottom seam at points other than at the corners of the pouch.

4.8.3 Federal Test Method Standard No. 101. The tests indicated below shall be conducted in accordance with the specified methods of Federal Test Method Standard No. 101:

Tests	Applicable to Types	Method No.	Special Requirements or Exceptions Notes
Puncture Resistance	I, II, III	2065	1/
Water Vapor Transmission Rate (WVTR) Flexing procedure (as received and aged) Transmission rate procedure	I	2017 3030, Procedure A(1)	2/
WVTR After Low Temp Flexing Flexing procedure Transmission rate procedure	I	2017 3030, Procedure A(1)	3/

Source: https://assist.dla.mil -- Downloaded: 2016-10-21T12:17Z
Check the source to verify that this is the current version before use.

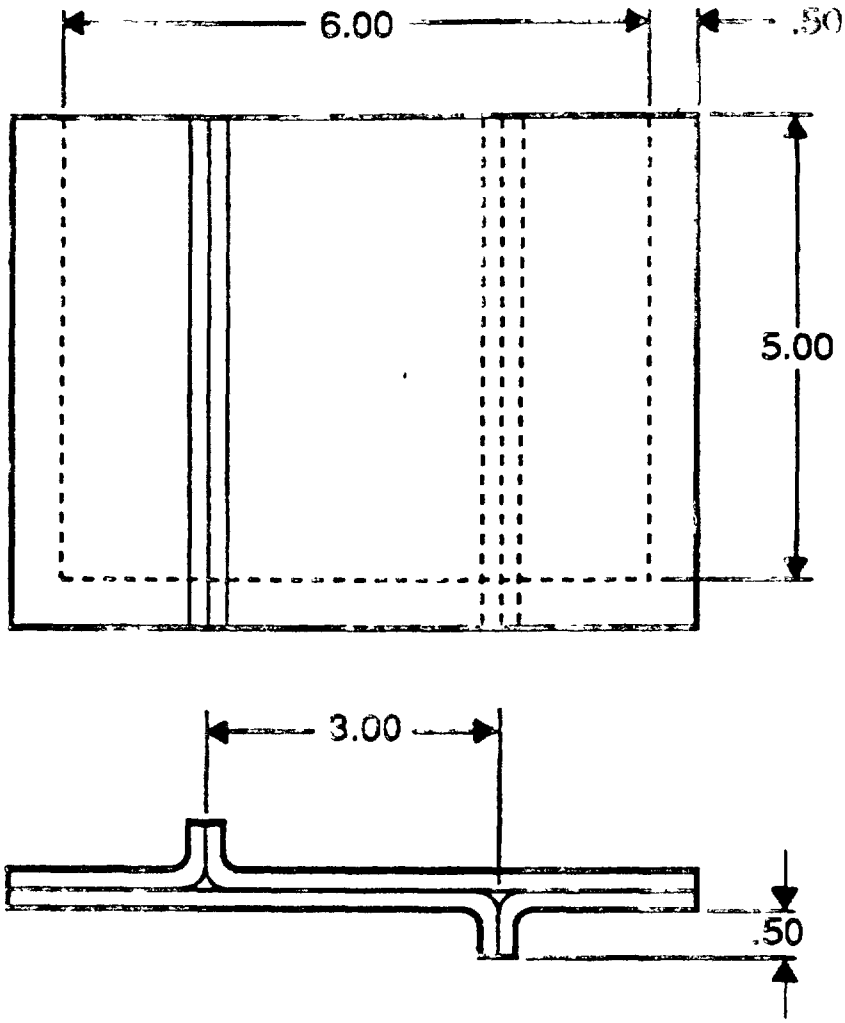

DIMENSIONS IN INCHES

FIGURE 2. Pouch for seam fabrication test.

Source: https://assist.dla.mil -- Downloaded: 2016-10-21T12:17Z
Check the source to verify that this is the current version before use.

Tests	Applicable to Types	Method No.	Special Requirements or Exceptions Notes
Resistance to Blocking	I, II, III	3003, Procedure D	
Water Resistance	I, II, III (laminated only)	3028, Procedure F	4/
Water Resistance of Markings	I, II, III (printed only)	3027	5/
Contact Corrosivity	I, II, III	3005	6/
Delamination	I, II, III (laminated only)	3015	7/
Resistance to Curl	I, II, III (Class 1 only)	2015	8/
Static Decay	I, II, III	4046	9/
Thickness	I, II, III	1003	10/
Transparency	II, III	4034	10/

NOTES:

1/ Test shall be run on five specimens. Material under test shall have heat sealable face in contact with the probe. The average value for the five specimens tested shall meet the requirements as listed in Table I. Elongation test data is not required.

2/ Full stroke shall be used on both as received and aged specimens.

3/ Conduct tests as in Method 2017 except that only as received specimens shall be tested. Prior to flexing, test specimens shall be conditioned for at least 30 minutes at -20° ± 2°F and the flexing operation shall be conducted at -20° ± 2°F.

4/ Use distilled water. Delamination shall be defined as ply separation at any one given point extending more than 1/2 inch from the edge, with an edge length separation greater than one inch.

5/ Three specimens shall be tested, each one containing a complete set of markings.

6/ The following test surfaces shall be used for testing and shall be exposed for 72 hours:

a. QQ-S-698, low carbon steel, condition 5.
b. QQ-A-250/4, aluminum alloy, 2024 bare.
c. Copper, as specified in ASTM B 451, nominal thickness 0.014 inches.
d. Silver plated copper foil (foil same as in c), plating thickness 100-200 microinches.
e. SN63 tin-lead eutectic solder coated copper foil (foil same as in c), coating thickness 200-500 microinches, QQ-S-571.
f. Stainless steel, Unified Numbering System UNS31400.
g. Kovar as specified in ASTM F 15.

Source: https://assist.dla.mil -- Downloaded: 2016-10-21T12:17Z
Check the source to verify that this is the current version before use.

Placed or coated test surfaces shall not be ground or abraded, but otherwise shall be prepared in accordance with Method 3005. If corrosion is evident in the blank area, the test shall be repeated with a new test panel. Corrosion in the intermediate area shall not invalidate the test nor be cause for rejection. The barrier material shall be evaluated individually and results reported on each material in triplicate.

7/ Both oil conforming to ASTM Oil #3, as defined in ASTM D 471, and a di-2-ethylhexyl sebacate synthetic oil shall be used.

8/ Three specimens shall be tested. Specimens shall not be suspended, but shall be placed on a horizontal surface.

9/ The average value for the three specimens tested for each exposure condition (as received, after aging, and after shower exposure) shall meet the requirement as listed in Table I. The decay time to measure is the time it takes to dissipate 99% of the initial 5000 volt charge (both positive and negative). Testing shall be performed in an atmosphere maintained at 73° ± 5°F (23 ± 5°C) and 12 ± 3 percent relative humidity.

10/ Three specimens shall be tested.

4.8.4 Resistance to aging. Three specimens, 6 by 36 inches, cut from across the roll of material, at points at least 1 yard apart shall be used for this test.

4.8.4.1 Procedure. The specimens shall be subjected to the following aging cycle:

8 hours in a humidity chamber at 100 ± 2°F and 90 to 95 percent relative humidity.

16 hours in a circulating air oven at 160 ± 2°F.

The aging cycle shall be repeated on every week day, Monday through Friday. The specimens shall remain in the circulating air oven maintained at the conditions described above on Saturday, Sunday and holidays, except that holidays shall not exceed a total of two days over the entire aging period. The aging procedure shall continue for fourteen consecutive days. The specimens shall be folded loosely, hung, rolled loosely or laid flat in the test chamber during the aging period. At the conclusion of the aging period the specimens shall be returned to room temperature and examined, particularly at all edges, for delamination brought about by the aging exposure. No supplemental attempt to delaminate the material, such as prying or picking at the plies, shall be carried out. For purposes of this test, delamination shall be defined as ply separation at any one given point exceeding more than 1/2 inch from the edge with an edge length separation greater than 1 inch.

4.8.5 Waterproofness.

4.8.5.1 Test preparation. Flexing procedure shall be conducted in accordance with Federal Test Method Standard No. 101 Method 2017, except that unaged specimens only shall be tested. Prior to flexing, the test specimens shall be conditioned for at least 30 minutes at -20° ± 2°F and the flexing operation shall be conducted at -20° ± 2°F.

Source: https://assist.dla.mil -- Downloaded: 2016-10-21T12:17Z
Check the source to verify that this is the current version before use.

4.8.5.2 Procedure. After flexing the specimen, the sleeve shall be removed, allowed to come to room temperature and dried by wiping with absorbent material or by placing in a circulating air oven maintained at 160°F for 10 minutes. The sleeve shall be removed and made into a pouch by sealing one end. A quantity of shredded absorbent paper sufficient to fill the pouch shall be placed inside the pouch. The pouch shall then be placed in a water solution containing 1 percent Aerosol O.T. and methyl violet for ten minutes. The pouch shall then be removed, wiped dry, and the shredded absorbent paper examined for dye stain.

4.8.6 EMI attenuation. This measuring technique is intended for determining Radio Frequency (RF) attenuation characteristics of the Type I and Type III. Specimens shall be tested as received and after flexing in accordance with FED-STD-101, Method 2017, using the full stroke flexing motion prior to testing.

4.8.6.1 Preliminary steps. The following measurement technique shall be used at 500 MHz intervals from 1.0 to 10.0 GHz.

(1) An aperture of 7 inches x 7 inches shall be cut into the access panel of an RF shielded chamber.

(2) The test equipment shall consist of an RF signal generator with a transmit horn antenna as the RF source and a HP spectrum analyzer or EMI receiver with receive horn antenna as the measurement system. Test equipment shall be set up as shown in Figure 3.

(3) The receive horn antenna shall be placed inside the RF shielded chamber and centered both horizontally and vertically with the 7 x 7 inch opening of the aperture at a distance of not less than 1.65 ft (0.5m) from the test sample.

(4) The transmit horn antenna shall be placed outside the RF shielded chamber and centered both horizontally and vertically with the 7 x 7 inch opening of the aperture at a distance of not less than 1.65 ft (0.5m) from the test sample.

(5) The total distance between the transmit horn antenna and the receive horn antenna shall be not less than 3.3 ft (1.0m). This distance is not critical but once set should not be changed during the testing without repeating both the open aperture and sheet metal/closed aperture setup tests.

4.8.6.2 Test procedure.

(1) Keep the 7 x 7 inch aperture uncovered.

(2) The transmit horn antenna shall be positioned, as specified in 4.8.6.1(5) to produce a minimum of 35 db of dynamic range, between an open aperture and a sheet metal/closed aperture, for the entire frequency range of 1.0 GHz through 10.0 GHZ. This position shall be determined by placing the transmit horn antenna at the test position and adjusting the signal generator to produce a minimum signal level of 35 db above the noise

Source: https://assist.dla.mil -- Downloaded: 2016-10-21T12:17Z
Check the source to verify that this is the current version before use.

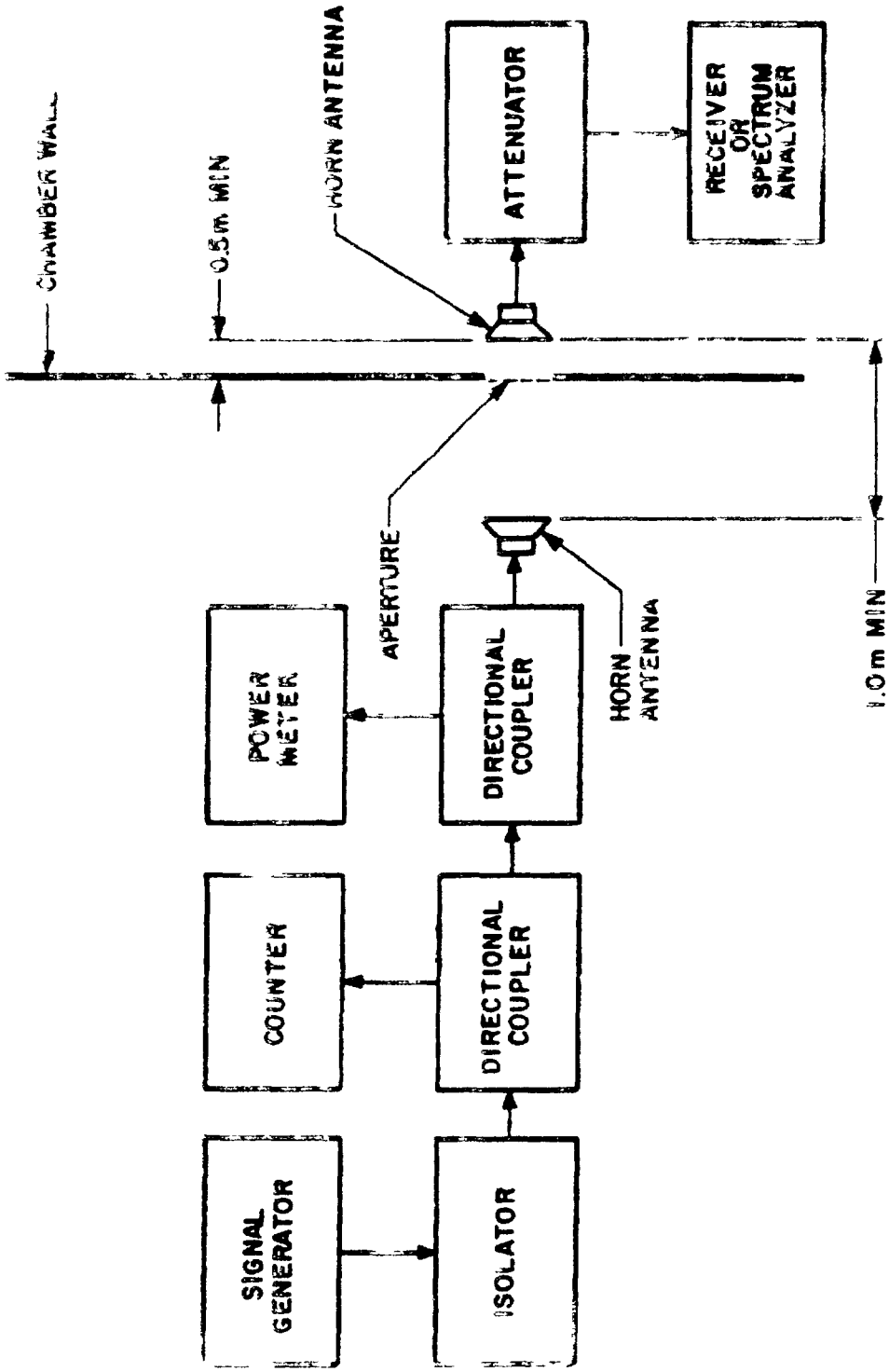

FIGURE 3. Test set-up for determining EMI attenuation characteristics (block diagram).

Source: https://assist.dla.mil -- Downloaded: 2016-10-21T12:17Z
Check the source to verify that this is the current version before use.

floor of the spectrum analyzer or EMI receiver with the 7 x 7 inch opening (aperture) uncovered. A sheet metal plate shall be placed over the opening and the test repeated at the same power output level used for the open aperture test to insure that a dynamic range of over 35 db is achieved. A signal level shall be selected for each test frequency in order to provide the required dynamic range.

(3) Tune receiver or spectrum analyzer (SA) to obtain a display or indication.

(4) Record readings from signal generator (frequency and output level) and receiver or spectrum analyzer signal level.

(5) Repeat steps (2), (3) and (4) at all test frequencies. Ensure that signal generator (frequency and output level) is the same as recorded in step (4).

(6) Cut a square of sheet metal (same material as test barrier) of approximately 8 inches x 8 inches. Using silver epoxy (Esolder type 3021, Epoxy Products Company, New Haven, CT, or equivalent), apply the adhesive evenly around the 7 inch x 7 inch open aperture such that a flat ribbon of approximately 1/2 inch is present around the perimeter of the opening. Place the sheet metal square symmetrically over the opening with approximately 1/2 inch overlap on all four sides and press evenly and firmly to assure good bonding between the two surfaces. Conductive tape or 7 inch magnetic strips may also be used to fasten the sheet metal or the test sample to the open aperture in place of the silver epoxy.

(7) Repeat steps (2), (3) and (4) at all test frequencies. Ensure that the signal generator (frequency and output level) is the same as recorded in step (4).

(8) Remove sheet metal plate installed in step (6) and using the same procedure described in step (6), fasten the test sample to be tested.

NOTE: The outer surface of the test sample shall face the transmitting horn.

Repeat steps (2), (3) and (4) at all test frequencies. Ensure that the signal generator (frequency and output level) and frequency shall be the same as recorded in step (4).

(9) The difference (in dB) between the spectrum analyzer or receiver's readings in step (4) and step (8) is the attenuation characteristics of the test sample.

NOTE: This reading cannot exceed the difference (in dB) between the readings in step (4) and step (7).

Source: https://assist.dla.mil -- Downloaded: 2016-10-21T12:17Z
Check the source to verify that this is the current version before use.

4.8.7 Marking abrasion resistance.

4.8.7.1 Preparation of test specimens. Strips 3 inches wide containing marking shall be cut so that the amount of printing shall be a maximum. The length shall be sufficient so that after a bifold seam is formed and stapled, the resultant strip shall be 3 inches wide by 18 inches long (see Figure 4).

4.8.7.2 Procedure. The test bar shall be a hollow 5052 aluminum 1-3/8" to 1-1/2" diameter tube with a number 63 finish. The strip will be hung over the bar with .9 ± .05 lbs weight attached to one end (Figure 4). The side with the print or raised embossing shall be in contact with the bar. The other end shall be pulled (stroked) at a rate of 50 to 70 strokes per minute for 1 minute. The stroke length shall be 13 to 16 inches. The angle of pull (stroke) shall be from 0° to 45°. The strip shall be removed and the weight detached. The printing shall be examined for legibility, smear and blurring.

4.8.8 Surface resistivity.

4.8.8.1 Test specimens. Specimens of sufficient size to accommodate testing equipment shall be selected at random and in sufficient number to adequately represent the variation of material. Specimens shall be selected across the length and width of the entire roll sample. A minimum of five specimens are required.

4.8.8.2 Conditioning of test specimens. Test specimens shall be conditioned at 12 ± 3 percent relative humidity and 73° ± 5°F (23° ± 3°C) for a minimum of 48 hours. Additional conditioning shall include flexing the specimens in accordance with FED-STD-101, Method 2017, using the full stroke flexing motion prior to testing.

4.8.8.3 Test environment. Perform tests in an atmosphere uniformly maintained at 73° ± 5°F (23° ± 3°C) and 12 ± 3 percent relative humidity.

4.8.8.4 Test procedure. The testing procedure shall be in accordance with ASTM D 257. Use flat specimen electrode configuration for measuring volume and surface resistance or conductance (Figure 4 of ASTM D 257). Samples shall be tested on the inner surface (side opposite the side containing the identification markings) and the outer surface of the barrier material. A surface resistivity value not within the range specified in Table I on any of the five specimens tested per sample shall be cause for rejection.

4.8.9 Electrostatic shielding test method.

4.8.9.1 Test specimens. Specimens, selected at random, shall consist of 4 inch wide x 6 inch deep bags (inner dimension, with a tolerance of minus 1/4 inch) constructed from roll stock material. Each bag shall be constructed from a single sheet of material folded in the middle then heat-sealed along two edges. A minimum of five specimen bags are required.

4.8.9.2 Conditioning of test specimens. Conditioning shall be as specified in 4.8.8.2.

Source: https://assist.dla.mil -- Downloaded: 2016-10-21T12:17Z
Check the source to verify that this is the current version before use.

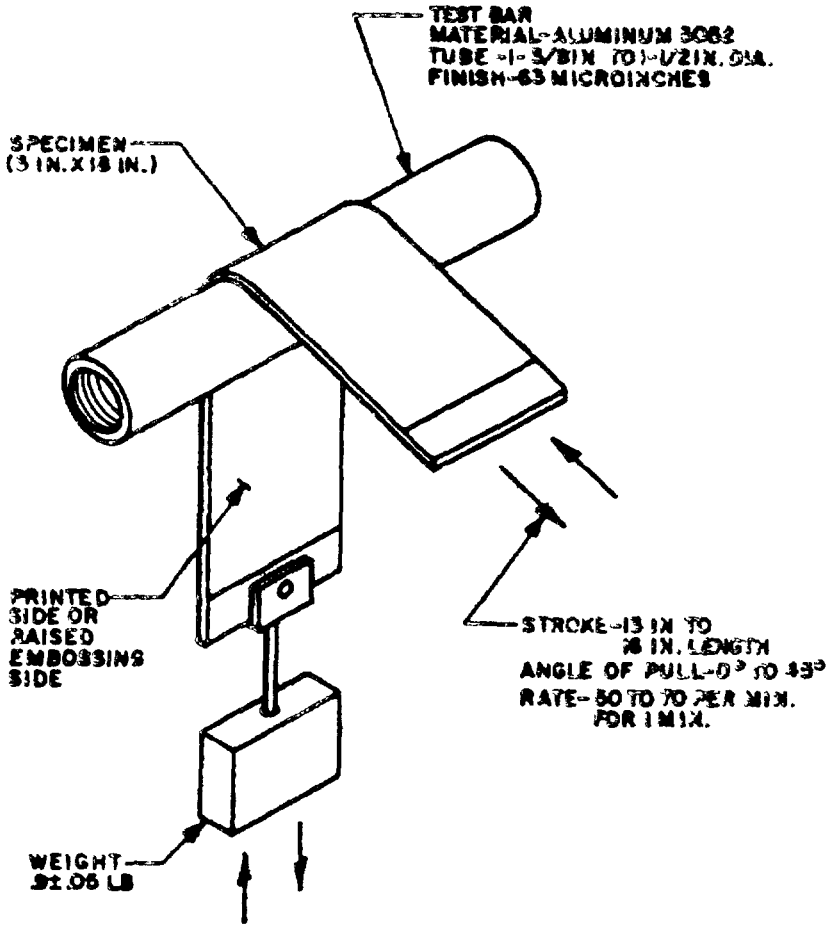

FIGURE 4. Apparatus for testing identity markings resistance to abrasion.

Source: https://assist.dla.mil -- Downloaded: 2016-10-21T12:17Z
Check the source to verify that this is the current version before use.

4.8.9.3 Test environment. Tests shall be performed in an atmosphere uniformly maintained at 73° ± 5°F (23° ± 3°C) and 12 ± 3 percent relative humidity.

4.8.9.4 Test procedure. The testing procedure shall be in accordance with the applicable appendix of EIA-541 (2 Probe Electrostatic Shielding Property Test). The test shall be performed at 1000 volts. A peak voltage higher than that specified in Table I on any of the five specimens tested shall be cause for rejection.

5. PACKAGING

5.1 Preservation. Barrier materials shall be preserved Level A or C as specified (see 6.2).

5.1.1 Level A.

5.1.1.1 Rolls. Each roll shall be wound on a core (see 3.4.1).

5.1.1.2 Flat cuts. Flat cuts of material shall be sandwiched between two fiberboard pads conforming to PPP-F-320. The minimum dry bursting strength of the fiberboard shall be 275 pounds. The flat cuts shall then be packaged in bundles having a maximum weight of 50 pounds. Bundles shall be secured with tape conforming to PPP-T-97, fiber twine, or rope, two ties in each direction, of such strength as to assure safe arrival of the bundles. The fiberboard pads shall be of a size commensurate with the size of the flat cuts so as to prevent damage to the sheets during the bundling operation.

5.1.2 Level C. Rolls and flat cuts shall be preserved to afford adequate protection against deterioration and damage during shipment from the supply source to the first receiving activity. The supplier may use his standard practice when it meets these requirements.

5.2 Packing. Barrier materials shall be packed Level A, B or C as specified (see 6.2).

5.2.1 Level A.

5.2.1.1 Rolls. Each roll of material, preserved as specified in 5.1 shall be packed in fiber drums conforming to Type III, Grade D of PPP-D-723. Drum closure shall be reinforced by means of a 3-inch wide tape conforming to PPP-T-60 or PPP-T-76.

5.2.1.2 Flat cuts. Unless otherwise specified, one bundle of flat cuts, preserved as specified in 5.1.1.2, shall be packed in weather-resistant boxes conforming to PPP-B-636. The grade of container used shall be governed by the size and weight limitations of the container specification. Four boxes shall then be overpacked in boxes conforming to PPP-B-601 (overseas type), PPP-B-621, or PPP-B-640, Class 2. End cleats of PPP-B-621 boxes shall be a minimum of 1-1/16 inches thick.

Source: https://assist.dla.mil -- Downloaded: 2016-10-21T12:17Z
Check the source to verify that this is the current version before use.

5.2.2 Level B.

5.2.2.1 Rolls. Each roll of material, preserved as specified in 5.1 shall be packed in fiber drums conforming to Type I, Grade O of PPP-D-723. The covers shall be taped to the side walls with 3-inch sisal reinforced tape or equivalent.

5.2.2.2 Flat cuts. Each bundle of flat cuts, preserved as specified in 5.1 shall be packed in fiberboard boxes conforming to Type SF or CF (variety SW) Class Domestic, of PPP-B-636. When specified (see 6.2) V3c or V3s or V4s boxes of PPP-B-636 shall be used.

5.2.3 Level C. Rolls and flat cuts of barrier materials shall be packed in exterior shipping containers in a manner that will ensure safe transportation at the lowest rate to the point of delivery. Containers shall conform to Uniform Freight Classification Rules or National Motor Freight Classification Rules, as applicable.

5.3 Marking. All individual packages and shipping containers shall be marked in accordance with MIL-STD-129 and as follows:

Size - Nominal net lineal yardage of roll or dimensions of flat cuts (net lineal yardage is the number of yards of usable material in the rolls).
Date of Manufacture (month and year).
"KEEP COOL AND DRY"

6. NOTES

(This section contains information of a general or explanatory nature that may be helpful, but is not mandatory.)

6.1 Intended use. It is intended that these barrier materials be used to fabricate enclosures for electrostatic and/or electromagnetic sensitive equipment and components. These barrier materials are especially formulated to prevent the buildup or retention of electrostatic potential and to protect electronic parts.

6.1.1 Type I barrier material. Type I barrier material is intended for use for the watervaporproof, electrostatic and electromagnetic protection of microcircuits, certain semiconductor devices (such as microwave diodes and field effect transistors, sensitive resistors and other miniature electronic parts requiring this protection).

6.1.2 Type II barrier material. Type II barrier material is intended for use where transparency and static dissipation is required and contact with oil or grease is not contemplated. The transparent material is also intended for level C packaging use where a waterproof, static disspative barrier is needed. For level A requirement its use is limited to interior wraps or bags.

Source: https://assist.dla.mil -- Downloaded: 2016-10-21T12:17Z
Check the source to verify that this is the current version before use.

6.1.3 Type III barrier material. Type III barrier material is intended for use where a transparent, waterproof, electrostatic-protective and electrostatic field protective barrier is required. When specified for use with Type I material, provides for enhanced EMI and electrostatic shielding protection. This material is also intended for level C packaging. However, when level A packaging is required, its use is limited to interior wraps or bags.

6.1.4 Class designation. A class designation has been established in order to distinguish between materials which do, and do not curl. Class 1 material has unlimited use and is suitable for the fabrication of bags by manual sealing methods or by automated bag making machines. Class 2 material is suitable for the fabrication of bags only by automated bag making machines.

6.2 Ordering data. Requests, requisitions, schedules and contracts or orders should contain the following:

(a) Title, number and date of this specification.

(b) Type and class, as applicable.

(c) Issue of DODISS to be cited in the solicitation, and if required, the specific issue of individual documents referenced (2.1.1, 2.2).

(d) Quantity.

(e) Form (rolls of tubing or sheeting or flat cuts) (3.4).

(f) Flat cuts (specify width and length) (3.4).

(g) Weather-resistant class boxes, if required for Level B (5.2.2.2).

(h) Levels of preservation and packing required (5.1, 5.2).

6.3 Qualification. With respect to products requiring qualification, awards will be made only for products which are, at the time set of award of contract, qualified for inclusion in the applicable Qualified Products List whether or not such products have actually been so listed by that date. The attention of the contractors is called to these requirements, and manufacturers are urged to arrange to have the products that they propose to offer to the Federal Government tested for qualification in order that they may be eligible to be awarded contracts or purchase orders for the products covered by this specification. The activity responsible for the Qualified Products List is the Commander, Naval Air Systems Command, Department of the Navy, Washington, DC 20360; however, information pertaining to qualification of products may be obtained from the Commander, Naval Air Development Center, Aerospace Materials Division, Attention: Code 60611, Warminster, PA 18974.

6.3.1 It is understood, after receipt of the letter of authorization, that samples shall be furnished at no cost to the Government, and that the manufacturer will pay all transportation charges to and from the point where

Source: https://assist.dla.mil -- Downloaded: 2016-10-21T12:17Z
Check the source to verify that this is the current version before use.

the tests are made. In case of failure of the sample or samples submitted, consideration will be given to the request of the manufacturer for additional tests only after it has been clearly shown that changes have been made in the product which the Government considers sufficient to warrant additional tests. The costs of retests will be borne by the manufacturer.

6.4 Equipment or material sources. Sources of equipment and materials cited in this specification can be obtained by contacting the activity responsible for the qualification of products as indicated in 6.3.

6.5 Changes from previous issue. Marginal notations are not used in this revision to identify changes with respect to the previous issue due to the extensiveness of the changes.

6.6 Metric conversion factors. The following conversion factors are referenced in FED-STD-376.

6.6.1 Temperature. To convert Fahrenheit (°F) to Celsius (°C) use the following formula:

$$\text{Temperature °C} = \frac{(\text{Temperature °F} - 32)}{1.8}$$

6.6.2 Pressure. To convert pounds per square inch (lb/in^2) to kilopascals (kPa), multiply by 6.895.

6.6.3 Weight.

a. To convert ounces (oz) to kilograms (kgs), multiply by 0.02834.

b. To convert pounds (lbs) to kilograms (kgs), multiply by 0.4536.

6.6.4 Length.

a. To convert inches (in.) to millimeters (mm), multiply by 25.4.

b. To convert yards (yd) to meters (m), multiply by 0.9144.

6.6.5 Area. To convert inches squared (in^2) to millimeters squared (mm^2) multiply by 645.16.

6.7 Subject term (keyword) listing.

Barrier material
Electromagnetic shielding
Electrostatic protective
Flexible
Heat-sealable
Waterproof
Watervaporproof

Source: https://assist.dla.mil -- Downloaded: 2016-10-21T12:17Z
Check the source to verify that this is the current version before use.

Custodians:
Army - GL
Navy - AS
Air Force - 69
DLA - ES

Review Activities:
Army - ER, SM
Navy - SH, SA, OS
Air Force - 43, 70, 30, 84

User Activities:
Navy - YD, MC
Army - AR, CR

Preparing Activity:
Navy - AS
(Project 6135-0586)

Source: https://assist.dla.mil -- Downloaded: 2016-10-21T12:17Z
Check the source to verify that this is the current version before use.

INSTRUCTIONS In a continuing effort to make our standardization documents better, the DoD provides this form for use in submitting comments and suggestions for improvements. All users of military standardization documents are invited to provide suggestions. This form may be detached, folded along the lines indicated, taped along the loose edge (*DO NOT STAPLE*), and mailed. In block 5, be as specific as possible about particular problem areas such as wording which required interpretation, was too rigid, restrictive, loose, ambiguous, or was incompatible, and give proposed wording changes which would alleviate the problems. Enter in block 6 any remarks not related to a specific paragraph of the document. If block 7 is filled out, an acknowledgement will be mailed to you within 30 days to let you know that your comments were received and are being considered.

NOTE. **This form may not be used to request copies of documents, nor to request waivers, deviations, or clarification of specification requirements on current contracts. Comments submitted on this form do not constitute or imply authorization to waive any portion of the referenced document(s) or to amend contractual requirements.**

(Fold along this line)

(Fold along this line)

DEPARTMENT OF THE NAVY
Commanding Officer
Naval Air Engineering Center
Systems Engineering and Standardization Department
(SESD), Code 53
Lakehurst, NJ 08733-5100

OFFICIAL BUSINESS
PENALTY FOR PRIVATE USE $300

NO POSTAGE NECESSARY IF MAILED IN THE UNITED STATES

BUSINESS REPLY MAIL
FIRST CLASS PERMIT NO 12503 WASHINGTON D C

POSTAGE WILL BE PAID BY THE DEPARTMENT OF THE NAVY

Commanding Officer
Naval Air Engineering Center
Systems Engineering and Standardization Department
(SESD), Code 53
Lakehurst, NJ 08733-5100

Source: https://assist.dla.mil -- Downloaded: 2016-10-21T12:17Z
Check the source to verify that this is the current version before use.

STANDARDIZATION DOCUMENT IMPROVEMENT PROPOSAL

(See Instructions - Reverse Side)

1. DOCUMENT NUMBER	2. DOCUMENT TITLE
MIL B-81705C	BARRIER MATERIALS, FLEXIBLE, ELECTROSTATIC PROTECTIVE, HEAT SEALABLE

3a. NAME OF SUBMITTING ORGANIZATION	4. TYPE OF ORGANIZATION (Mark one)
	☐ VENDOR
	☐ USER
b. ADDRESS (Street, City, State, ZIP Code)	☐ MANUFACTURER
	☐ OTHER (Specify) _____

5. PROBLEM AREAS

a. Paragraph Number and Wording

b. Recommended Wording

c. Reason/Rationale for Recommendation

6. REMARKS

7a. NAME OF SUBMITTER (Last, First, MI) – Optional	b. WORK TELEPHONE NUMBER (Include Area Code) – Optional
c. MAILING ADDRESS (Street, City, State, ZIP Code) – Optional	8. DATE OF SUBMISSION (YYMMDD)

DD FORM 1426, 82 MAR

Source: https://assist.dla.mil -- Downloaded: 2026-10-21T12:17Z
Check the source to verify that this is the current version before use.