MILITARY SPECIFICATION

TRANSFORMERS AND INDUCTORS (AUDIO, POWER, AND HIGH-POWER PULSE), GENERAL SPECIFICATION FOR

This specification is approved for use by all Departments and Agencies of the Department of Defense.

1. SCOPE

1.1 Scope. This specification covers the general requirements for audio, power, and high-power pulse transformers and inductors for use in electronic and communication equipment. This specification covers transformers and inductors weighing 300 pounds or less or having root-mean-square (rms) test-voltage ratings of 50,000 volts or less, and also high-power pulse transformers where the peak pulse power is greater than 5 watts. Transformer and inductor assemblies incorporating any other active or passive components do not come within the scope of this specification.

1.2 Classification.

1.2.1 Type designation 1/. The type designation shall be in the following form, and as specified (see 6.1.2).

TF	4	R	03	GA
Component (1.2.1.1)	Grade (1.2.1.2)	Class (1.2.1.3)	Family (1.2.1.4)	Envelope and mounting dimensions (1.2.1.5)

1.2.1.1 Component. Transformers and inductors are identified by the two-letter symbol "TF".

1.2.1.2 Grade. The grade is identified by a single digit denoting metal encased, encapsulated, or open-type construction, and the ability of the transformers or inductors to withstand the environmental tests of table I.

1.2.1.2.1 Grade 4. Grade 4 units are sealed, metal encased with either separately fabricated headers or terminals or both. This grade does not include units which are encapsulated in a metal shell with an opening in either end or side of the shell, or with insulated lead wires extending through the metal shell.

1.2.1.2.2 Grade 5. Grade 5 units are encapsulated, including molded or embedded constructions, and units with a metal shell, open at one or both ends and filled with encapsulant material.

1.2.1.2.3 Grade 6. Grade 6 units are open type and are generally intended for subsequent potting, molding, or embedment in an assembly with or without component parts.

1/ The type designation shall not be used as the Military part number.

Beneficial comments (recommendations, additions, deletions) and any pertinent data which may be of use in improving this document should be addressed to: US Army Electronics Research and Development Command, ATTN: DELET-R-S, Fort Monmouth, NJ 07703, by using the self-addressed Standardization Document Improvement Proposal (DD Form 1426) appearing at the end of this document or by letter.

Source: https://assist.dla.mil -- Downloaded: 2016-11-03T19:10Z
Check the source to verify that this is the current version before use.

TABLE I. Grade.

Test	Grade 4 metal encased	Grade 5 encap-sulated	Grade 6 open type
Seal - - - - - - - - - - - -	X	---	---
Thermal shock- - - - - - - -	X	X	X
Immersion- - - - - - - - - -	X	X	---
Moisture resistance- - - -	X	X	---
Vibration- - - - - - - - - -	X	X	X
Shock- - - - - - - - - - - -	X	X	X
Flammability - - - - - - - -	---	X	---
Salt spray (when specified	X	X	---

1.2.3.1 Class. The class is identified by a single letter in accordance with table II, and denotes the maximum operating temperature (temperature rise (see 4.8.12) plus maximum ambient temperature (see 6.14.3.1 and 6.14.3.3)).

TABLE II. Class.

Symbol	Maximum operating temperature
	°C
Q	85
R	105
S	130
V	155
T	170
U	170, as specified (see 3.1)

1.2.1.4 Family (see 6.1). The family is identified by a two-digit symbol in accordance with table III.

TABLE III. Family.

03 - Power transformer
04 - Power inductor
20 - Audio inductor
21 - Audio transformer
36 - Pulse transformer
37 - Charging inductor
40 - Saturable transformer
41 - Saturable inductor

1.2.1.5 Envelope and mounting dimensions. The envelope and mounting dimensions are identified by a two-letter symbol in accordance with figure 1.

2. APPLICABLE DOCUMENTS

2.1 Government specifications and standards. Unless otherwise specified, the following specifications and standards, of the issue listed in that issue of the Department of Defense Index of Specifications and Standards specified in the solicitation, form a part of this specification to the extent specified herein.

SPECIFICATIONS

FEDERAL

J-W-1177 - Wire, Magnet, Electrical.
L-P-513 - Plastic Sheet, Laminated, Thermosetting, Paper-Base, Phenolic Resin.
L-P-378 - Plastic Sheet and Strip, Polyester.

Source: https://assist.dla.mil -- Downloaded: 2016-11-03T19:10Z
Check the source to verify that this is the current version before use.

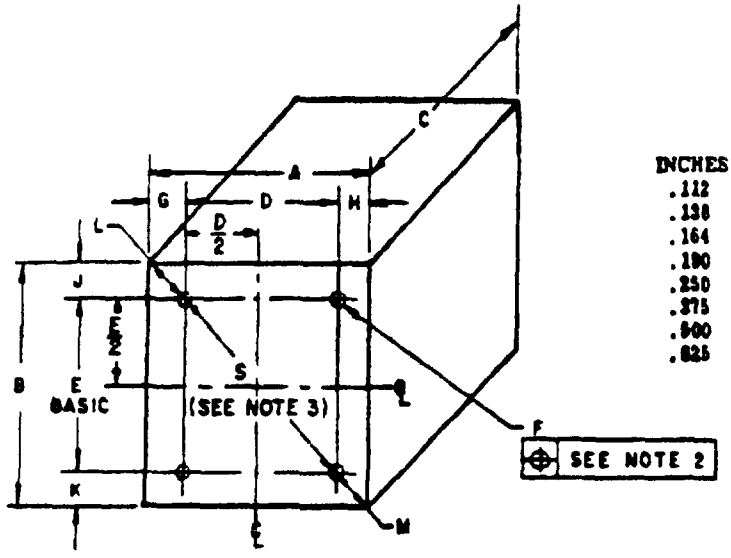

INCHES	MM
.112	2.84
.138	3.51
.164	4.17
.190	4.83
.250	6.35
.375	9.53
.500	12.70
.625	15.88

Case symbol	Dimensions (inches)						
	Envelope			Mounting			
	A	B	C	D	E	S	F
AF	0.750	0.750	1.125			0.562	.112-40 x .375
AG	1.000	1.000	1.375			0.750	.112-40 x .375
AH	1.312	1.312	1.750			1.250	.138-32 x .375
AJ	1.625	1.625	2.375	1.188	1.188		.138-32 x .375
EA	1.938	1.812	2.750	1.375	1.250		.138-32 x .375
EB	1.938	1.812	2.438	1.375	1.250		.138-32 x .375
FA	2.312	2.062	3.125	1.688	1.438		.138-32 x .375
FB	2.312	2.062	2.500	1.688	1.438		.138-32 x .375
GA	2.750	2.375	3.812	2.125	1.750		.138-32 x .375
GB	2.750	2.375	2.812	2.125	1.750		.138-32 x .375
HA	3.062	2.625	4.250	2.297	1.859		.164-32 x .375
HB	3.062	2.625	3.188	2.297	1.859		.164-32 x .375
JA	3.562	3.062	4.875	2.625	2.125		.164-32 x .375
JB	3.562	3.062	3.875	2.625	2.125		.164-32 x .375
KA	3.938	3.375	5.250	3.000	2.438		.190-32 x .500
KB	3.938	3.375	4.312	3.000	2.438		.190-32 x .500
LA	4.312	3.688	5.562	3.312	2.688		.190-32 x .500
LB	4.312	3.688	4.500	3.312	2.688		.190-32 x .500
MA	4.688	4.000	6.000	3.688	3.000		.250-20 x .625
MB	4.688	4.000	4.938	3.688	3.000		.250-20 x .625
NA	5.062	4.312	6.812	4.062	3.312		.250-20 x .625
NB	5.062	4.312	5.500	4.062	3.312		.250-20 x .625
OA	5.500	4.500	6.750	3.750	3.000		.250-20 x .625
YY	All metal cases not included above						
ZZ	All encapsulated units not included above and all grade 6 units						

INCHES	MM	INCHES	MM
.562	14.27	2.812	71.42
.750	19.05	3.000	76.20
1.000	25.40	3.062	77.77
1.125	28.58	3.125	79.38
1.188	30.18	3.188	80.98
1.250	31.75	3.312	84.12
1.312	33.32	3.375	85.73
1.375	34.93	3.562	90.47
1.438	36.53	3.688	93.68
1.688	42.88	3.750	95.25
1.688	42.88	3.813	96.82
1.750	44.45	3.875	98.43
1.812	46.02	3.938	100.03
1.859	47.22	4.000	101.60
1.938	49.23	4.062	103.17
2.062	52.37	4.250	107.95
2.125	53.98	4.312	109.52
2.297	58.34	4.500	114.30
2.312	58.72	4.688	119.08
2.375	60.33	4.875	123.83
2.438	61.93	4.938	125.43
2.500	63.50	5.062	128.57
2.625	66.68	5.250	133.35
2.688	68.28	5.500	139.70
2.750	69.85	5.562	141.27
		6.000	152.40
		6.750	171.45
		6.812	173.02

FIGURE 1. Envelope and mounting dimensions.

Source: https://assist.dla.mil -- Downloaded: 2016-11-03T19:10Z
Check the source to verify that this is the current version before use.

NOTES:

1. The envelope dimensions for encapsulated units (grade 5) shall not exceed the maximum dimensions specified on figure 1, and the mounting dimensions shall be identical to the dimensions specified for the equivalent cased-unit size.
2. Tolerances on A, B, C dimensions and the location of F on figure 1 are as follows:

   (a) Cases AF to OA inclusive:

Case size	Tolerances		
	A and B	C	Location of F
AF, AG, and AH	+.000 -.062	+.000 -.125	⌖ .023 DIA
AJ	+.000 -.062	+.000 -.125	⌖ .023 DIA
EA to JB inclusive	+.000 -.125	+.000 -.188	⌖ .023 DIA
KA to LB inclusive	+.000 -.125	+.000 -.188	⌖ .044 DIA
MA to OA inclusive	+.000 -.125	+.000 -.188	⌖ .066 DIA

INCHES	MM
.023	0.58
.044	1.12
.062	1.57
.066	1.67
.125	3.18
.188	4.78

   (b) Cases YY and ZZ. Dimensions not exceeding those for the AJ case shall have tolerances not exceeding those for the AJ case. For larger dimensions up to case size OA, the tolerances specified in (a) shall apply. For case sizes larger than OA, tolerances shall be as specified (see 3.1 and 6.1.2). Dimensions A, B, and C for ZZ cases are considered maximum dimensions.

3. Dimension "S" applies to two-stud mounting for cases AF to AH inclusive.
4. Cases AF to OA inclusive shall have studs and terminals on the same face. Stud size and length shall be as specified above.
5. Screw-stud lengths are measured from the mounting surface and have a length tolerance of ±.062 inch (1.57 mm) on studs .500 inch (12.70 mm) long or less, and ±.125 inch (3.18 mm) on studs over .500 inch (12.70 mm) long. Studs are preferred; however, when required by the complementary document, mounting screw inserts may be supplied instead of studs. Unless otherwise specified, mounting screw inserts shall have a minimum depth equivalent to eight full threads of the same diameter as the stud of the corresponding case size.
6. Rectangular cases may have corner radii not to exceed one-quarter of the smallest envelope dimensions.
7. When mounted, tilt of units (overhang only) measured horizontally or vertically, shall not exceed .016 inch (0.41 mm) per inch of height but need not be less than .016 inch (0.41 mm) for any height, and shall be referenced to the maximum specified case dimensions.
8. The above case sizes are preferred NATO types, NEPR-20, and shall be used in the design of all NATO equipment.
9. Metric equivalents are given for general information only.
10. Dimensions G=H, J=K, and L=M shall be within .020 inch (0.51 mm) respectively, and shall be as specified (see 3.1 and 6.1.2).
11. Center lines of the drawing are the center line of the mounting pattern.

FIGURE 1. Envelope and mounting dimensions - Continued.

Source: https://assist.dla.mil -- Downloaded: 2016-11-03T19:10Z
Check the source to verify that this is the current version before use.

NN-P-71	-	Pallets, Material Handling, Wood, Double Faced, Stringer Construction.
QQ-S-571	-	Solder, Tin Alloy; Tin-Lead Alloy; and Lead Alloy.
QQ-S-781	-	Strapping, Steel, Flat and Seals.
PPP-B-566	-	Boxes, Folding, Paperboard.
PPP-B-601	-	Boxes, Wood, Cleated-Plywood.
PPP-B-621	-	Boxes, Wood, Nailed and Lock-Corner.
PPP-B-636	-	Boxes, Shipping, Fiberboard.
PPP-B-640	-	Boxes, Fiberboard, Corrugated, Triple-Wall.
PPP-B-676	-	Boxes, Setup.

MILITARY

MIL-I-10	-	Insulating Materials, Electrical, Ceramic, Class L.
MIL-M-14	-	Molding Plastics and Molded Plastic Parts, Thermosetting.
MIL-W-76	-	Wire and Cable, Hookup, Electrical, Insulated.
MIL-P-116	-	Preservation-Packaging, Methods of.
MIL-P-997	-	Plastic Material, Laminated, Thermosetting, Electrical Insulation: Sheets, Glass Cloth, Silicone Resin.
MIL-F-14256	-	Flux, Soldering, Liquid (Rosin Base).
MIL-P-15037	-	Plastic Sheet, Laminated, Thermosetting, Glass-Cloth, Melamine-Resin.
MIL-P-15047	-	Plastic-Material, Laminated Thermosetting, Sheets, Nylon Fabric Base, Phenolic-Resin.
MIL-W-16878	-	Wire, Electrical, Insulated, High Temperature.

(See supplement 1 for list of associated specifications.)

STANDARDS

FEDERAL

FED-STD-H28	-	Screw-Thread Standards for Federal Services.
FED-STD-595	-	Colors.

MILITARY

MIL-STD-105	-	Sampling Procedures and Tables for Inspection by Attributes.
MIL-STD-129	-	Marking for Shipment and Storage.
MIL-STD-147	-	Palletized Unit Loads.
MIL-STD-202	-	Test Methods, for Electronic and Electrical Component Parts.
MIL-STD-275	-	Printed Wiring for Electronic Equipment.
MIL-STD-794	-	Parts and Equipment, Procedures, for Packaging and Packing of.
MIL-STD-810	-	Environmental Test Methods.
MIL-STD-1285	-	Marking of Electrical and Electronic Parts.
MIL-STD-45662	-	Calibration Systems Requirements.

(Copies of specifications, standards, handbooks, drawings, and publications required by manufacturers in connection with specific acquisition functions should be obtained from the contracting activity or as directed by the contracting officer.)

2.2 Order of precedence. In the event of a conflict between the text of this specification and the references cited herein, the text of this specification shall take precedence.

3. REQUIREMENTS

3.1 Specification sheets. The individual item requirements shall be as specified herein and in accordance with the applicable specification sheet. In the event of any conflict between the requirements of this specification and the specification sheet, the latter shall govern.

Source: https://assist.dla.mil -- Downloaded: 2016-11-03T19:10Z
Check the source to verify that this is the current version before use.

3.2 Qualification. The transformers and inductors covered by specification sheets furnished under this specification shall be products which are qualified for listing on the applicable qualified products list at the time set for the opening of bids (see 4.5 and 6.2). When there are no products listed or approved for listing on the qualified products list, the qualification requirement is waived only by the preparing activity. The acquiring activity shall invoke first article inspection.

3.3 First article. The transformers and inductors not covered by specification sheets shall be as specified in the applicable complementary document (see 6.1.2). The products shall have been tested and passed first article inspection in 4.6 and 6.3. The inspection consists of meeting all of the qualification tests of 4.5 through 4.5.1.3 inclusive, and table VI

3.3.1 Information to be furnished with first article sample. The applicable information outlined in 6.1.2 shall be furnished with the first article sample, together with any other pertinent information as required by the Government.

3.4 Materials. The materials shall be as specified herein; however, when a definite material is not specified, a material shall be used which will enable the transformers and inductors to meet the performance requirements of this specification. Acceptance or approval of any constituent material shall not be construed as a guaranty of the acceptance of the finished product.

3.4.1 Substitution of materials. If the manufacturer desires to substitute another material for a specified material or fabricated part, he shall submit a statement to the Government describing the proposed substitution, together with evidence to substantiate his claims that such substitute is suitable. At the discretion of the Government, test samples may be required to prove the suitability of the proposed substitute Before such substitutions are made, approval for each substitution shall be obtained in writing from the Government.

3.4.2 Flammable materials. Insofar as practicable, materials used in the construction of the transformers and inductors shall be nonflammable and nonexplosive.

3.4.3 Corrosive materials. Corrosive materials used in any of the manufacturing processes shall be removed or neutralized so that no corrosion will result from such use. Insofar as practicable, materials used in the construction of transformers and inductors shall be noncorrosive.

3.4.4 Insulating materials.

3.4.4.1 Laminated phenolic materials. When a laminated phenolic material is used, it shall conform to MIL-P-997, L-P-513, MIL-P-15037, or MIL-P-15047. When electrical characteristics are involved, only natural uncolored materials shall be used.

3.4.4.2 Molded phenolic or melamine materials. When a molded phenolic or melamine material is used it shall conform to MIL-M-14.

3.4.4.3 Ceramic materials (external use). When a ceramic material is used, it shall conform to MIL-I-10.

3.4.5 Wire.

3.4.5.1 Magnet wire. Magnet wire shall conform to and be of the types and sizes specified in J-W-1177. Government approval shall be required when other types and sizes of magnet wire are used.

3.4.5.2 Insulated wire. When insulated wire is used as wire terminals, the wire shall be of the types and sizes covered in MIL-W-76 or MIL-W-16878. Government approval shall be required when other types and sizes of insulated wire are used as terminals.

3.4.6 Solder and soldering flux. Solder, when used, shall be in accordance with QQ-S-571. Soldering flux shall be in accordance with MIL-F-14256.

3.4.7 Screws, nuts, and washers. All mounting and terminal screws, nuts, and washers shall be of corrosion-resistant material or shall be protected against corrosion.

Source: https://assist.dla.mil -- Downloaded: 2016-11-03T19:10Z
Check the source to verify that this is the current version before use.

3.5 Design and construction.

3.5.1 Mounting screws and mounting inserts. Screw threads shall be class 2A or 2B, as applicable (see 3.1), in accordance with FED-STD-H28. External screw threads, class 2 fit, after receiving a finish, shall be capable of accepting a nut of class 2B fit and internal screw threads; class 2 fit, after receiving a finish, shall be capable of accepting a screw of class 2A fit with maximum installation torque in accordance with the following

Screw size	Torque (pound-inches)
.112-40 UNC - - - -	3
.138-32 UNC - - - -	5
.164-32 UNC - - - -	6
.190-32 UNF - - - -	8
.250-20 UNC - - - -	8
.312-18 UNC - - - -	8

Nuts shall run down to within two threads of mounting surface.

3.5.2 Terminals (see 3.1 and 6.1.2).

3.5.2.1 Solder terminals (see 4.8.2.2). Solder terminals may be of any shape and shall be capable of complying with solderability requirements of this specification. The height of the solder terminal shall be considered as the maximum distance from the terminal mounting surface to the highest point, including the additional height obtained if semiflexible terminals are straightened. (It is not intended that the "hook" in the hook-type terminal be straightened from its normal hooked position.) The type of terminal and the maximum size of wire which the terminal will accept externally shall be as specified (see 3.1 and 6.1.2).

3.5.2.2 Pin-type terminals for printed circuits (see 3.1 and 6.1.2). The preferred diameter for the terminal pins of printed circuit transformers and inductors is 0.028 inch. The grid matrix shall conform to a 0.1-inch matrix in accordance with MIL-STD-275 with centers to a tolerance of ±0.002 inch. Uninsulated solid wire terminals not greater than 1 inch in length shall be considered to be pins (see 4.8.2.1).

3.5.2.3 Pin-type terminals for electron tube sockets (see 3.1 and 6.1.2). Pins for use with electron tube type sockets shall conform with standard 7-pin button base E7-1 or standard 9-pin button base E9-1 (see figure 2).

3.5.2.4 Screw terminals. When specified (see 3.1, 6.1.1 and 6.1.2, external screw terminals shall be supplied with two nuts, two flat washers, and one lockwasher. For cased units, the height of the terminal assembly shall be the distance from the free end of the screw to the terminal mounting surface. The type of terminal, size of screw thread, and the exposed length of threads ±.062 inch shall be as specified (e.g., screw, .164-32 UNC x .375) (see 3.1 and 6.1.2).

3.5.3 Mounting studs. When specified (see 3.1, 6.1.1, and 6.1.2), external mounting studs shall be provided with a flat washer and locknut, or with a flat washer, lockwasher, and a nut.

3.5.4 Internal wire leads. Internal wire leads shall be attached to the coils and other internal components and terminals or case by soldering, welding, brazing, or other method (e.g., lead-sweating of nylon-coated wires) in such a manner as to provide adequate electrical connection and mechanical strength. Where soft solder is used to provide the electrical connection, wire leads shall be anchored mechanically.

3.5.5 Core and coil mounting. Cores and coils shall be secured rigidly to prevent any permanent change in the relative position of the parts. When the total volume of the case or inner case of multiple-cased units (such as shielded units) exceeds 6.5 cubic inches, the means of securing the core and coil to the devices for mounting the transformer or inductor in the equipment (e.g., studs, lugs, inserts, brackets, etc.,) shall not depend on soft solder alone for mechanical strength, nor shall the transmission of the mechanical load of the core to the mounting device depend only on

Source: https://assist.dla.mil -- Downloaded: 2016-11-03T19:10Z
Check the source to verify that this is the current version before use.

soft solder. When rigid thermosetting material is used, or when the total volume of the case or the inner case of multiple-cased units (such as shielded units) does not exceed 6.5 cubic inches, the potting or filling compound alone may be used to prevent movement provided the compound does not tend to flow at the specified maximum operating temperature (see 3.1 and 6.1.2). When specified (see 3.1 and 6.1.2), the core shall be grounded to the case or shall be electrically accessible.

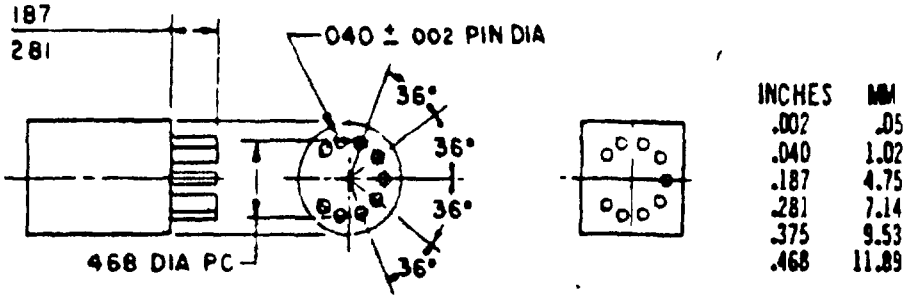

STANDARD 9-PIN BUTTON BASE E9-1

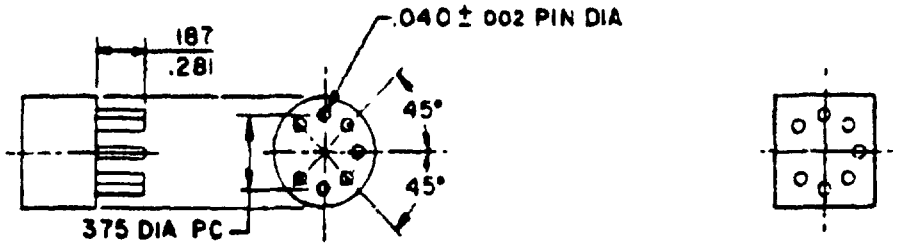

STANDARD 7-PIN BUTTON BASE E7-1

NOTES:
1. Dimensions are in inches.
2. Metric equivalents are given for general information only.

FIGURE 2. Pin-type terminals for electron tubes.

3.5.6 Paint color. When a paint finish is specified (see 3.1 and 6.1.2), the color of the paint shall be in accordance with FED-STD-595, gray, 26307. Unless otherwise specified (see 3.1 and 6.1.2), the manufacturer shall omit paint from the mounting area surface and terminal surface.

3.5.7 Potting, filling, or encapsulating material (grades 4 and 5). The amount and coverage of potting, filling, or encapsulating material used shall be essentially the same for all units of a specific design. Potting, filling, or encapsulating material shall not flow from the case of the transformer or inductor during any of the applicable tests.

3.5.8 Weight. Transformers and inductors shall not exceed the weight specified (see 3.1 and 6.1.2).

3.6 Solderability. When the transformers and inductors are tested as specified in 4.8.2, they shall meet the applicable criteria for terminal evaluation in the test method.

3.7 Resistance to solvents. When the transformers and inductors are tested as specified in 4.8.3, there shall be no evidence of mechanical damage and the markings shall remain legible. The paint or exterior finish shall not soften, peel, or show other signs of deterioration.

Source: https://assist.dla.mil -- Downloaded: 2016-11-03T19:10Z
Check the source to verify that this is the current version before use.

3.8 Thermal shock screening and thermal shock test.

3.8.1 Thermal shock screening (when specified, see 3.1 and 6.1.2). This test is applicable only when specified (see 3.1 and 6.1.2) and shall be performed in the qualification tests in group II and the group A inspection in subgroup I. When transformers and inductors are tested as specified in 4.8.4.1 there shall be no evidence of filling material and no evidence of other physical damage such as cracks, bursting or bulging of the case or corrosion affecting the mechanical or electrical operation. When continuity monitoring is specified there shall be no evidence of electrical discontinuity greater than 100 microseconds.

3.8.2 Thermal shock test. When transformers and inductors are tested as specified in 4.8.4.2 there shall be no evidence of filling material and no evidence of other physical damage such as cracks, bursting or bulging of the case or corrosion affecting the mechanical or electrical operation.

3.9 Resistance to soldering heat. When the transformers and inductors are tested as specified in 4.8.5, there shall be no softening of the insulation or loosening of the windings or terminals.

3.10 Terminal strength. When the transformers and inductors are tested as specified in 4.8.6, there shall be no evidence of loosening or rupturing of the terminals, or other mechanical damage. Bends shall not be considered as damage unless surface cracking is evident. Except for flexible leads, there shall be no rotation of the terminals. Rotation of the external portion of the metallic portion of a "hook" type terminal exceeding 10 degrees shall not constitute a failure.

3.11 Seal (grade 4) (see 4.8.7).

3.11.1 Liquid-filled units. When the transformers and inductors are tested as specified in 4.8.7.1, there shall be no evidence of liquid leakage.

3.11.2 Gas-filled units. When the transformers and inductors are tested as specified in 4.8.7.2, the leak rate shall not exceed 1×10^{-8} standard atmosphere cubic centimeter per second (atm cm^3/s).

3.11.3 All other units. When the transformers and inductors are tested as specified in 4.8.7.3, there shall be no continuous flow of air bubbles or leakage of compound from the body of the units. When the coil is individually encapsulated, bubbles from the space between the coil and laminations shall not be considered a failure provided the seal of the coil has been previously tested.

3.12 Dielectric withstanding voltage. When the transformers and inductors are tested as specified in 4.8.8, there shall be no evidence of arcing, flashover, breakdown of insulation, or damage.

3.13 Induced voltage. When the transformers and inductors are tested as specified in 4.8.9, there shall be no evidence of continuous arcing or breakdown of insulation, nor shall there be any abrupt changes in the input current, or Q, as applicable.

3.14 Insulation resistance. When measured as specified in 4.8.10, the minimum insulation resistance shall be one of the following values, as specified in tables VI, VII, and VIII.

a. 10,000 megohms.

b. 1,000 megohms.

c. 7,500 megohms.

3.15 Electrical characteristics. When the transformers and inductors are tested as specified in 4.8.11, the applicable electrical characteristics and tolerances shall be as specified (see 3.1 and 6.14.11).

3.16 Temperature rise. When the transformers and inductors are tested as specified in 4.8.12, the temperature rise of any winding above the specified maximum ambient temperature (see 3.1 and 6.1.2) shall not exceed the value specified (see 3.1 and 6.1.2), and there shall be no evidence of physical damage.

Source: https://assist.dla.mil -- Downloaded: 2016-11-03T19:10Z
Check the source to verify that this is the current version before use.

3.17 Corona discharge (when specified, see 3.1 and 6.1.2). When the transformers and inductors are tested as outlined in 4.8.13 or as specified (see 3.1 and 6.1.2), the corona shall not exceed 1-inch peak-to-peak deflection as indicated on the oscilloscope.

3.18 Salt spray (corrosion) (grades 4 and 5, when specified, see 3.1 and 6.1.2). When the transformers and inductors are tested as specified in 4. 8.14, there shall be no evidence of corrosion as exhibited by any visible degradation of the surfaces that can be attributed to flaking, pitting, blistering or otherwise loosened protective coating or metal surface.

3.19 Vibration. When the transformers and inductors are tested as specified in 4.8.15, there shall be no leakage of filling material, no evidence of other physical damage such as cracks, bursting, or bulging of the case.

3.20 Shock. When the transformers and inductors are tested as specified in 4.8.16, there shall be no leakage of filling material, no evidence of other physical damage such as cracks, bursting, or bulging of the case.

3.21 Winding continuity. When the transformers and inductors are tested as specified in 4.8.17, all windings shall be electrically continuous.

3.22 Immersion (grades 4 and 5). When the transformers and inductors are tested as specified in 4.8.18, there shall be no leakage of filling material, no evidence of other physical damage such as cracks, bursting, or bulging of the case or corrosion affecting the mechanical or electrical operation.

3.23 Moisture resistance. When the transformers and inductors are tested as specified in 4.8.19, there shall be no leakage of filling material, no evidence of other physical damage such as cracks, bursting, or bulging of the case or corrosion affecting the mechanical or electrical operation.

3.24 Overload. When the transformers and inductors are tested as specified in 4.8.20, there shall be no leakage of filling material, no evidence of other physical damage such as cracks, bursting, or bulging of the case.

3.25 Visual and mechanical examination (post test). When the transformers and inductors are examined as specified in 4.8.1.1.1, not more than 10 percent of the surface shall have peeling, flaking, chipping, cracking, crazing, or other impairment of the protective coating. There shall be no leakage of the filling material, no evidence of other physical damage, such as cracks, bursting, or bulging of the case or corrosion affecting the mechanical or electrical operation of the units.

3.26 Flammability (grade 5). When the transformers and inductors are tested as specified in 4.8.21, there shall be no evidence of violent burning which results in an explosive-type fire, and the coating material used on the transformers and inductors shall be self-extinguishing. A transformer or inductor shall not be considered to have failed, in the event that it is consumed by the applied flame, unless dripping of flaming material or an expolsive-type flame has occurred. A transformer or inductor shall be considered to have failed only if an explosion of dripping of flaming material occurs, an explosive-type flame is produced, or if visible burning continues beyond the allowable duration of 3 minutes after removal of the applied flame. Material will be considered self-extinguishing if the following conditions are met:

a. The duration of visible flame does not exceed 3 minutes after removal of the applied flame.

b. There is no explosion, nor any violent burning which results in an explosive-type flame.

c. There is no dripping of flaming material from the transformer or inductor under test.

Source: https://assist.dla.mil -- Downloaded: 2016-11-03T19:10Z
Check the source to verify that this is the current version before use.

3.27 Life. When the transformers and inductors are tested as specified in 4.8.22, there shall be no evidence of physical or electrical damage as indicated by an open circuit (a break in the continuity of any electrical circuit within the transformer or inductor being tested) or short circuit occurring within the transformer or inductor (such as shorted turns or faulty insulation between layers, turns, windings, windings and case or core, or windings and shield). In addition, transformers and inductors shall meet the following requirements:

a. Insulation resistance shall be as specified in 3.14c.

b. Dielectric withstanding voltage (at atmospheric pressure) shall be as specified in 3.12.

c. Induced voltage shall be as specified in 3.13.

The electrical characteristics shall remain within the tolerance or limits specified (see 3.1). All transformers and inductors furnished under this specification shall have a life expectancy of 10,000 hours minimum.

3.28 Fungus. All external materials shall be nonnutrient to fungus growth or shall be suitably treated to retard fungus growth. The manufacturer shall certify that all external materials are fungus resistant (see 4.8.23) or shall perform the test specified in 4.8.23. There shall be no evidence of fungus growth on the external surfaces.

3.29 Marking. The transformers and inductors shall be marked with the military part number, manufacturer's part number, source code, terminal identification (circuit diagram where space permits), date code, and lot symbol (if other than date code) in accordance with method I of MIL-STD-1285. The marking may be applied to more than one side of the case if the required marking necessitates more space than is available on the one side. Where the surface areas are insufficient for all of the required information, as many as possible of the markings shall be applied using the order of priority as listed above. Markings shall remain legible after all tests. Any markings of a classified nature shall not be included. When specified (see 3.1 and 6.1.2), the following additional information as applicable to the individual families, shall be included for units greater than 0.15 cubic inch. The type designation shall not be marked on the unit unless otherwise specified (see 6.1.2).

3.29.1 Family 03. Rated voltage and frequency of primary rated voltages and currents of secondaries, working voltages to ground for each winding, working voltages between windings whenever they exceed any of the applicable working voltages to ground, and the altitude if greater than 10,000 feet.

3.29.2 Families 04, 20, and 37. Rated inductance at nominal frequency and voltage, ac voltage and frequency, dc current, dc resistance, working voltages to ground, working voltages between windings when they exceed any of the applicable working voltages to ground, and the altitude if greater than 10,000 feet.

3.29.3 Family 21. Source and load impedances, dc currents, frequency range, decibels (referred to 1 milliwatt in 600 ohms (dB m)) or power level in watts, working voltages to ground, and working voltages between windings whenever they exceed any of the applicable working voltages to ground, and the altitude if greater than 10,000 feet.

3.29.4 Family 36. Pulse width and duty cycle, pulse polarity, source and load impedances, operating voltage and current data, working voltages to ground, and working voltages between windings whenever they exceed any of the applicable voltages to ground, and the altitude if greater than 10,000 feet.

3.29.5 Families 40 and 41. Maximum control current, impedance, impedance variation, rated voltages and frequency (as applicable), maximum feedback current (if any), bias current (if any), operating power level, working voltages to ground, and working voltages between windings whenever they exceed any of the applicable working voltages to ground, and the altitude if greater than 10,000 feet.

3.29.6 Terminal identification. Unless otherwise specified (see 3.1 and 6.1.2), terminals shall be identified by appropriate numbers or, where space does not permit numbering, by color coding in accordance with table IV.

Source: https://assist.dla.mil -- Downloaded: 2016-11-03T19:10Z
Check the source to verify that this is the current version before use.

TABLE IV. Terminal color code.

Black (ground)	0	Green	5
Brown	1	Blue	6
Red	2	Violet	7
Orange	3	Gray	8
Yellow	4	White	9

3.30 Workmanship. The transformers and inductors shall be processed in such a manner as to be uniform in quality and shall meet the requirements of 3.4, 3.5, and 3.29, as applicable, and shall be free of defets that will affect life serviceability or appearance.

4. QUALITY ASSURANCE PROVISIONS

4.1 Responsibility for inspection. Unless otherwise specified in the contract or purchase order, the contractor is responsible for the performance of all inspection requirements as specified herein. Except as otherwise specified in the contract or purchase order, the contractor may use his own or any other facilities suitable for the performance of the inspection requirements specified herein, unless disapproved by the Government. The Government reserves the right to perform any of the inspections set forth in the specification where such inspections are deemed necessary to assure supplies and services conform to prescribed requirements.

4.1.1 Test equipment and inspection facilities. Test and measuring equipment and inspection facilities of sufficient accuracy, quality and quantity to permit performance of the required inspection shall be established and maintained by the inspection facility. The establishment and maintenance of a calibration system to control the accuracy of the measuring and test equipment shall be in accordance with MIL-STD-45662.

4.2 Classification of inspections. The inspections specified herein are classified as follows:

a. Materials inspection (see 4.3).

b. Qualification inspection (see 4.5).

c. First article inspection (see 4.6).

d. Quality conformance inspection (see 4.7).

4.3 Materials inspection. Materials inspection shall consist of certification supported by verifying data that the materials listed in table V, used in fabricating the transformers and inductors, are in accordance with the applicable referenced specifications or requirements prior to such fabrication.

TABLE V. Materials inspection.

Materials	Requirement paragraph	Applicable specification
Insulating material:		
Laminated phenolic	3.4.4.1	MIL-P-997, L-P-513, MIL-P-15037, or MIL-P-15047
Molded phenolic or melamine	3.4.4.2	MIL-M-14
Ceramic (external use)	3.4.4.3	MIL-I-10
Wire:		
Magnet wire	3.4.5.1	J-W-1177
Insulated wire	3.4.5.2	MIL-W-76 or MIL-W-16878
Solder and soldering flux	3.4.6	MIL-F-14256 and QQ-S-571

4.4 Inspection conditions. Unless otherwise specified herein, all inspections shall be performed in accordance with the test conditions specified in the "GENERAL REQUIREMENTS" of MIL-STD-202.

Source: https://assist.dla.mil -- Downloaded: 2016-11-03T19:10Z
Check the source to verify that this is the current version before use.

4.4.1 Test frequency. When a test frequency is specified herein, the frequency used shall be within ±2 percent of the nominal value. The test frequency of audio transformers and inductors shall be the geometric mean of the specified frequency range or a lower value selected by the manufacturer.

4.4.2 Test voltage. For transformers and inductors (other than audio families), the rated rms voltage at the minimum frequency of the specified frequency range shall be applied at the rated duty cycle (e.g., transformers rated at 50/60 hertz (Hz) shall be tested at 50 Hz; transformers and inductors rated at 60 Hz ±10 percent shall be tested at 60 Hz. When rated primary voltages are specified with a tolerance (see 3.1 and 6.1.2), the test voltage shall be the rated voltage (e.g., 115 ±10 volts shall be tested at 115 volts). For two-terminal primary windings where the rated primary voltage is specified as a range, the test voltage shall be the arithmetic mean of the range. For multitap primary windings where a range of voltages is specified, the test voltage shall be applied to the highest voltage in the range and applied to the appropriate terminals (e.g., 105 to 125 volts shall be tested at 125 volts). For dielectric withstanding voltage tests, the peak of the voltage applied shall not exceed by more than 5 percent the peak of the pure sine voltage.

4.5 Qualification inspection. Qualification inspection shall be performed at a laboratory acceptable to the Government (see 6.2) on sample units produced with equipment and procedures normally used in production.

4.5.1 Qualification of transformers and inductors based on complete testing.

4.5.1.1 Sample size. The number of sample units comprising a sample of transformers or inductors to be submitted for inspection shall be as specified in the appendix to this specification.

4.5.1.2 Inspection routine. The sample units shall be subjected to the inspections specified in table VI, in the order shown, and as specified in the appendix to this specification.

4.5.1.3 Failure. One or more failures shall be cause for refusal to grant qualification approval.

4.5.2 Qualification inspection of transformers and inductors based on similarity. Qualification inspection shall be performed only on those transformers and inductors which meet the requirements of 30.2 of the appendix of this specification.

4.5.2.1 Sample size. The number of sample units comprising a sample of transformers or inductors to be submitted for inspection shall be as specified in the appendix of this specification.

4.5.2.2 Inspection routine. Sample units shall be subjected to the qualification inspection in table VII, in the order shown.

4.5.2.3 Failure. One or more failures shall be cause for refusal to grant qualification approval.

4.5.3 Retention of qualification. To retain qualification the contractor shall meet the requirements of 4.5.1 every 36 months. The qualifying activity shall be notified in advance before action is initiated for retention of qualification in order to reach agreement on the units selected. Where the original qualification was restricted to a single part type, that same part type (8 sample units, see Appendix) shall be subjected to the requirements of 4.5.1. Where the original qualification of a selected part type(s) resulted in qualification of a family of similar items, any single part type out of that family (8 sample units, see Appendix) shall be subjected to the requirements of 4.5.1 to retain qualification for the entire family of items. The supplier shall also forward at 12-month intervals to the qualifying activity groups A and B data indicating as a minimum the number of lots that have passed and the number that have failed. The results of reworked lots shall be identified and accounted for.

Source: https://assist.dla.mil -- Downloaded: 2016-11-03T19:10Z
Check the source to verify that this is the current version before use.

TABLE VI. Qualification inspection.

Inspection	Grade 4	Grade 5	Grade 6	Requirement pargraph	Method paragraph
Group I					
Solderability 2/- - - - - -	X	X	X	3.6	4.8.2
Resistance to solvents (4 samples) 1/ - - - - - -	X	X		3.7	4.8.3
Group II					
Thermal shock screening (when specified) (see 3.1 and 6.1.2) - - - - - - - -	X	X	X	3.8.1	4.8.4.1
Winding continuity - - - -	X	X	X	3.21	4.8.17
Visual and mechanical examination (external)- - - - -	X	X	X	3.1, 3.4 to 3.4.4.3 incl., 3.5 to 3.5.2.4 incl., 3.5.3, 3.5.7, 3.5.8, 3.29 and 3.30	4.8.1.1
Resistance to soldering heat - - - - - - - - - - - -	X	X	X	3.9	4.8.5
Terminal strength - - - - -	X	X	X	3.10	4.8.6
Seal- - - - - - - - - - - - -	X			3.11	4.8.7
Dielectric withstanding voltage:					
At atmospheric pressure -	X	X	X	3.12	4.8.8.1
At barometric pressure- -	X	X	X	3.12	4.8.8.2
Induced voltage - - - - - -	X	X	X	3.13	4.8.9
Insulation resistance - - -	X	X	X	3.14a	4.8.10
Electrical characteristics-	X	X	X	3.15	4.8.11
Temperature rise (2 units)-	X	X	X	3.16	4.8.12
Group III					
Corona discharge (when specified) - - - - - - - -	X	X	X	3.17	4.8.13
Salt spray (when specified) - - - - - - - -	X	X		3.18	4.8.14
Vibration - - - - - - - - -	X	X	X	3.19	4.8.15
Shock - - - - - - - - - - -	X	X	X	3.20	4.8.16
Dielectric withstanding voltage					
At reduced voltage- - -	X	X	X	3.12	4.8.8.3
Induced voltage - - - - -	X	X	X	3.13	4.8.9
Winding continuity- - - -	X	X	X	3.21	4.8.17
Thermal shock (10 cycles) -	X	X	X	3.8.2	4.8.4.2
Winding continuity- - - -	X	X	X	3.21	4.8.17
Immersion - - - - - - - - -	X	X		3.22	4.8.18
Moisture resistance - - - -	X	X		3.23	4.8.19
Dielectric withstanding voltage:					
At reduced voltage- - -	X			3.12	4.8.8.3
Induced voltage - - - - -	X			3.13	4.8.9
Insulation resistance - -	X			3.14b	4.8.10
Winding continuity- - - -	X			3.21	4.8.17
Overload- - - - - - - - - -	X	X	X	3.24	4.8.20
Dielectric withstanding voltage:					
At reduced voltage- - -		X	X	3.12	4.8.8.3
Induced voltage - - - - -		X	X	3.13	4.8.9
Insulation resistance - -		X		3.14a	4.8.10
Insulation resistance - -			X	3.14b	4.8.10
Winding continuity- - - -		X	X	3.21	4.8.17

See footnotes at end of table.

Source: https://assist.dla.mil -- Downloaded: 2016-11-03T19:10Z
Check the source to verify that this is the current version before use.

TABLE VI. Qualification inspection - Continued.

Inspection	Grade 4	Grade 5	Grade 6	Requirement pargraph	Method paragraph
Group III -Continued					
Visual and mechanical examination (external) (post test) - - - - - - - - - - -	X	X	X	3.25	4.8.1.1.1
Electrical characteristics - (final)- - - - - - - - - - -	X X	X X	X X	3.15	4.8.11
Flammability (2 sample units) - - - - - - - - - - -		X		3.26	4.8.21
Visual and mechanical examination (internal) (3 sample units)- - - - - - -	X	X	X	3.1, 3.4 to 3.4.4.2 incl., 3.5.4, 3.5.5, 3.5.7, and 3.30	4.8.1.2
Group IV					
Life (2 samples)- - - - - -	X	X	X	3.27	4.8.22
Dielectric withstanding voltage·					
At reduced voltage- - -	X	X	X	3.12	4.8.8.3
Insulation resistance - -	X	X	X	3.14c	4.8.10
Induced voltage - - - - -	X	X	X	3.13	4.8.9
Visual and mechanical examination (external) - - (post test)	X	X	X	3.25	4.8.1.1.1
Electrical character-istiscs- - - - - - - - - - -	X	X	X	3.15	4.8.11
Group V					
Fungus 3/ - - - - - - - - - -	X	X	X	3.28	4.8.23

1/ Printed circuit type transformers and inductors only, or when specified (see 3.1).

2/ Solderable type terminals only: If the soldering iron method (4.8.2.2) of the solderability test is performed, then the resistance to soldering heat test (4.8.5.2) need not be performed.

3/ Test shall not be performed if the manufacturer provides certification that all external materials are fungus resistant.

Source: https://assist.dla.mil -- Downloaded: 2016-11-03T19:10Z
Check the source to verify that this is the current version before use.

TABLE VII. Qualification inspection for transformers and inductors similiar to transformers and inductors that have been qualified.

Inspection	Requirement pargraph	Method paragraph
Visual and mechanical examination (external)	3.1, 3.4 to 3.4.4.3 incl., 3.5 to 3.5.2.4 incl., 3.5.3, 3.5.7, 3.5.8, 3.29 and 3.30	4.8.1.1
Dielectric withstanding voltage		
At atmospheric pressure	3.12	4.8.8.1
At barometric pressure (when applicable)	3.12	4.8.8.2
Induced voltage	3.13	4.8.9
Insulation resistance	3.14a	4.8.10
Electrical characteristics	3.15	4.8.11
Corona discharge (when specified)	3.17	4.8.13
Temperature rise (1 sample unit)	3.16	4.8.12
Overload	3.24	4.8.20
Dielectric withstanding voltage		
At reduced voltage	3.12	4.8.8.3
Induced voltage	3.13	4.8.9
Insulation resistance	3.14a	4.8.10
Winding continuity	3.21	4.8.17
Visual and mechanical examination (external)	3.1, 3..4 to 3.4.4.3 incl., 3.5 to 3.5.2.4 incl., 3.5.3, 3.5.7, 3.5.8, 3.29 and 3.30	4.8.1.1

4.6 First article inspection. This inspection consists of meeting all of the qualification tests of 4.5 through 4 5.1.3 inclusive, and table VI. Acquisition activities may require contractors to furnish first article samples of the transformer or inductor units that they propose to supply for government inspection and contractural approval, (the sample units are not to be considered as part of the order). First article approval is valid only on the contract under which it is granted, unless extended by the government to another contract.

4.7 Quality conformance inspection.

4.7.1 Inspection of product for delivery. Inspection of product for delivery shall consist of groups A and B inspections.

4.7.1.1 Inspection lot. An inspection lot shall include completely assembled transformers or inductors of the same grade, class, family, and electrical characteristics, manufactured under essentially the same conditions and having similar construction and materials, may be combined to form a lot. (Similar construction and materials shall be construed to include differences that will not affect test results.) Sample units shall be so selected as to meet the requirements of 30 2.1 of the appendix.

4.7.1.2 Group A inspection. Group A inspection shall consist of the examinations and tests specified in table VIII in the order shown.

Source: https://assist.dla.mil -- Downloaded: 2016-11-03T19:10Z
Check the source to verify that this is the current version before use.

TABLE VIII. Group A inspection.

Inspection	Requirement pargraph	Method paragraph	Sampling procedure	
Subgroup I				
Thermal shock screening (when specified) (see 3.1)	3.8	4.8.4.1	100% inspection	
Winding continuity - - - - - -	3.21	4.8.17		
			AQL (percent defective)	
Subgroup II			Major	Minor
Visual and mechanical examination (external) - - - - - - - - - - - -	3.1, 3.4 to 3.4.4.3 incl., 3.5 to 3.5.2.4 incl., 3.5.3, 3.5.7, 3.29 and 3.30	4.8.1.1	1.0	4.0
Seal (grade 4)	3.11	4.8.7	1.0	---
Dielectric withstanding voltage 1/	3.12	4.8.8.1	1.0	---
Induced voltage- - - - - - - - - - -	3.13	4.8.9		
Insulation resistance - - - - - -	3.14a	4.8.10		
Electrical characteristics 2/·	3.15	4.8.11		
DC resistance and resistive unbalance- - - - - - - - - - - -	---	4.8.11.3		
Inductance and inductive unbalance - - - - - - - - - - - -	---	4.8.11.4		
Center-tap balance at low levels (-20 to -80 dB m balance)- - -	---	4.8.11.13		
Turns ratio- - - - - - - - - - - - -	---	4.8.11.17		
Polarity - - - - - - - - - - - - - -	---	4.8.11.14		
No load- - - - - - - - - - - - - - -	---	4.8.11.1		

1/ The Government may witness this test prior to performance of group A inspection in which event 4.8.8.3 will apply (see 6.6).
2/ As applicable (see 3.1).

4.7.1.2.1 Sampling plan. If, during the 100-percent inspection of subgroup I, screening requires that over 5 percent of the transformers be discarded, the lot shall be rejected. Statistical sampling and inspection for subgroup II shall be in accordance with MIL-STD-105 for general inspection level II. The acceptable quality levels (AQL) shall be as specified in table VIII. Major and minor defects shall be as defined in MIL-STD-105.

4.7.1.2.2 Rejected lots. If an inspection lot is rejected, the manufacturer may rework it to correct the defects, or screen out the defective units, and resubmit for reinspection. Resubmitted lots shall be inspected using tightened inspection. Such lots shall be separate from new lots, and shall be clearly identified as reinspected lots

4.7.1.3 Group B inspection. Group B inspection shall consist of the tests specified in table IX, in the order shown and shall be made on sample units which have been subjected to and have passed the group A tests unless it is more practical to select a separate sample from the lot for group B inspection.

Source: https://assist.dla.mil -- Downloaded: 2016-11-03T19:10Z
Check the source to verify that this is the current version before use.

TABLE IX. Group B inspection.

Test	Requirement pargraph	Method paragraph
Electrical characteristics. 1/ - - - - -	3.15	4.8.11
Rated load 2/- - - - - - - - - - - - - -	---	4.8.11.2
Harmonic distortion- - - - - - - - - - -	---	4.8.11.5
Frequency response - - - - - - - - - - -	---	4.8.11.7
Self-resonant frequency- - - - - - - - -	---	4.8.11.9
Coupling among units (multi unit transformers and inductors) - - - - -	---	4.8.11.10
Electrostatic shielding- - - - - - - - -	---	4.8.11.11
Magnetic shielding - - - - - - - - - - -	---	4.8.11.12
Storage factor - - - - - - - - - - - - -	---	4.8.11.15
Wave shape - - - - - - - - - - - - - - -	---	4.8.11.16
Phase shift- - - - - - - - - - - - - - -	---	4.8.11.18
Insertion loss - - - - - - - - - - - - -	---	4.8.11.8
Other electrical characteristics (see 3.1) - - - - - - - - - - - - - - -	---	---

1/ As applicable (see 3.1). The actual circuit may be used for the electrical inspection tests in lieu of the test circuits specified herein.
2/ The rated load test need not be performed if proof of prior compliance is available and other group A and B electrical parameters are within the specified limits.

4.7.1.3.1 Sampling plan. The sampling plan shall be in accordance with MIL-STD-105 for special inspection level S-4. The AQL shall be 2.5 percent defective.

4.7.1.3.2 Rejected lots. If an inspection lot is rejected, the manufacturer may rework it to correct the defects, or screen out the defective units, and resubmit for reinspection. Resubmitted lots shall be inspected using tightened inspection. Such lots shall be separate from new lots, and shall be clearly identified as reinspected lots.

4.7.1.3.3 Disposition of sample units. Sample units which have passed all the group B inspection may be delivered on the contract or purchase order, if the lot is accepted and the sample units are still within specified electrical tolerances, and if the terminals of the sample units are clean and smooth.

4.7.2 Inspection of packaging. The sampling and inspection of the preservation and interior pack marking shall be in accordance with the group A and B quality conformance inspection requirements of MIL-P-116. The sampling and inspection of the packing and marking for shipment and storage shall be in accordance with the quality assurance provisions of the applicable container specification and the marking requirements of MIL-STD-129.

4.8 Methods of inspection.

4.8.1 Visual and mechanical examination.

4.8.1.1 External. Transformers and inductors shall be examined to verify that the materials, external design and construction, physical dimensions, weight, marking, and workmanship are in accordance with the applicable requirements (see 3.1, 3.4 to 3.4.4.3 inclusive, 3.5 to 3.5.2.4 inclusive, 3.5.3, 3.5.7, 3.5.8, 3.29 and 3.30).

4.8.1.1.1 Posttest. Transformers and inductors shall be examined to verify that the protective coating, filling material, marking, and case construction are in accordance with the applicable requirements (see 3.25).

4.8.1.2 Internal. Transformers and inductors shall be disassembled and examined to verify that the materials, internal lead wires, internal mounting, impregnating, potting, and workmanship are in accordance with the applicable requirements (see 3.1, 3.4 to 3.4.4.2 inclusive, 3.5.4, 3.5.5, 3.5.7, and 3.30).

Source: https://assist.dla.mil -- Downloaded: 2016-11-03T19:10Z
Check the source to verify that this is the current version before use.

4.8.2 Solderability (see 3.6). Transformers and inductors shall be tested in accordance with 4.8.2.1 or 4.8.2.2, as applicable.

4.8.2.1 Solder bath method (for printed circuit terminals). Transformers and inductors shall be tested in accordance with method 208 of MIL-STD-202. The following details shall apply

a. Special preparation of specimen - Sample units shall not have been soldered during any of the previous tests.

b. Number of terminations of each part to be tested - A minimum of two of each type of terminal.

4.8.2.2 Soldering iron method (for all other terminal types). The test shall be performed on all solder terminals attached to the transformer or inductor. The solder shall conform to type S composition of Sn60 of QQ-S-571. The flux shall conform to type A or W as applicable of MIL-F-14256. The iron and solder shall be applied to the termination. Tinning for free flowing of the solder with proper wetting shall be evident. The transformer or inductor under test shall remain under standard atmospheric conditions for recovery for fifteen minutes, before final measurements are made.

a. Special preparation of specimen - The surface shall be smooth and properly tinned and the solder terminations shall not have been soldered during any previous test.

b. Number of terminations - In accordance with 4.8.2.1.

c. Examinations of terminations - In accordance with method 208 of MIL-STD-202.

d Point of application of soldering iron - 1/4 inch from the nearest insulating material or to one-half the exposed length of the terminal, whichever point is closer to the insulating material.

4.8.3 Resistance to solvents (see 3.7). Transformers and inductors shall be tested in accordance with method 215 of MIL-STD-202. The following details shall apply:

a. The marked portion of the transformer and inductor shall be brushed.

b. The number of sample units shall be as specified in table VI.

c. Transformers and inductors shall be examined for mechanical damage.

4.8.4 Thermal shock screening and thermal shock test (see 3.8).

4.8.4.1 Thermal shock screening (when specified, see 3.1 and 6.1.2). This test is applicable only when specified (see 3.1 and 6.1.2) and shall be performed in the qualification tests in group II and the group A inspection in subgroup I. Transformers and inductors shall be tested in accordance with method 107 of MIL-STD-202 except the temperature for step 3 shall be the maximum operating temperature for the class. The following details and exceptions shall apply:

a. Number of cycles - The number of cycles shall be as specified (see 3.1 and 6.1.2) but shall be restricted to 5, 10, 15, 25, or 50 cycles.

b. When specified (see 3.1 and 6.1.2), transformers and inductors shall be continually monitored for continuity during the entire final cycle to verify no intermittent conditions. Equipment shall be capable of detecting intermittent opens exceeding 100 microseconds. The taps of windings need not be monitored for this test.

4.8.4.2 Thermal shock test. Transformers and inductors shall be tested in accordance with method 107 of MIL-STD-202. The temperature for step 3 shall be the maximum operating temperature for the class. The following details and exceptions shall apply:

Source: https://assist.dla.mil -- Downloaded: 2016-11-03T19:10Z
Check the source to verify that this is the current version before use.

a. Test condition - A, except 10 cycles.

b. After cycling - transformers and inductors shall be examined for evidence of leakage and other visable damage.

4.8.5 Resistance to soldering heat (see 3.9). Transformers and inductors shall be tested in accordance with 4.8.5.1 or 4.8.5.2, as applicable.

4.8.5.1 Solder bath method (for printed circuit terminals). Transformers and inductors shall be tested in accordance with method 210 of MIL-STD-202. The following details shall apply.

a. Special preparation of specimen - Sample units shall not have been soldered during any of the previous tests.

b. Depth of immersion in the molten solder - To a point 1/4 inch from the nearest insulating material or to one-half the exposed length of the terminal, whichever point is closer to the insulating material.

c. Test condition - A (350°C ±10°C; immersion, 3 +1/2, -0 seconds).

d. Examination after test - The transformers and inductors shall be visually examined and there shall be no seepage of the impregnant, loosening of the terminals or other mechanical damage. The windings of transformers or inductors shall be checked for continuity. The transformer or inductor shall remain under standard atmospheric conditions for 15 minutes before final measurements are made.

4.8.5.2 Soldering iron method (for all other terminal types). The test shall be performed on all solder terminals attached to the transformer or inductor. The solder shall conform to type S composition of Sn60 of QQ-S-571. The flux shall conform to type A or W as applicable of MIL-F-14256. The iron and solder shall be applied to the termination Tinning for free flowing of the solder with proper wetting shall be evident. The transformer or inductor under test shall remain under standard atmospheric conditions for recovery for fifteen minutes, before final measurements are made.

a. Special preparation of specimen - The surface shall be smooth and properly tinned and the solder terminations shall not have been soldered during any previous test.

b. Examinations after test - In accordance with 4.8.5.1.

c. Point of application of soldering iron - 1/4 inch from the nearest insulating material or to one-half the exposed length of the terminal whichever point is closer to the insulating material.

4.8.6 Terminal strength (see 3.10). Transformers and inductors shall be tested as specified in 4.8.6.1 to 4.8.6.3.2 inclusive, as applicable. After each test, the terminals shall be examined for loosening and rupturing, and other mechanical damage. Unless otherwise specified, all terminals on each test sample shall be subjected to the following tests, up to a maximum of four identical terminals per sample.

4.8.6.1 Pull.

4.8.6.1.1 Solid-wire and insulated wire lead terminals (other than printed circuit terminals). Transformers and inductors shall be tested in accordance with method 211 of MIL-STD-202. The following details shall apply:

a. Test condition - A.

b. Points of measurement - A force shall be applied in the direction of the axis of termination and shall be increased gradually until the magnitude specified in table X is reached and shall be maintained for a period of 5 to 10 seconds.

4.8.6.1.2 Solder terminals. Transformers and inductors shall be tested in accordance with method 211 of MIL-STD-202. The following details shall apply:

Source: https://assist.dla.mil -- Downloaded: 2016-11-03T19:10Z
Check the source to verify that this is the current version before use.

a. Test condition - A.

b. Points of measurement - A force as specified in table X shall be applied to each terminal at the point where the lead from the external circuit connects to it. The force shall be applied in the weakest direction of the terminal, and shall be increased gradually to the specified magnitude and shall be maintained at that value for a period of 5 to 10 seconds.

TABLE X. Pull.

Cross-sectional area of electrode at its smallest point at which lead from external circuit connects	Force
Circular mils	Pounds
≤2,000	2.0
>2,000	5.0

4.8.6.1.3 Printed circuit and pin-type terminals (see 3.5.2.2). Transformers and inductors shall be tested for terminal secureness in accordance with method 211 of MIL-STD-202. The following detail and exception shall apply:

a. Test condition - A.

b. Applied force - Terminal secureness shall be tested by gradually applying a force of 2.0 pounds to each pin terminal in the direction of the axis of the terminal as shown on figure 3.

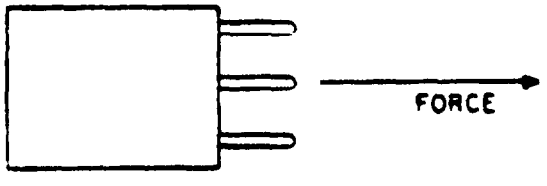

FIGURE 3. Direction of force to be applied to each pin on the unit.

4.8.6.2 Twist or bend.

4.8.6.2.1 Solid-wire lead terminals (other than printed circuit terminals). Following the test specified in 4.8.6.1.1, transformers and inductors shall be tested in accordance with method 211 of MIL-STD-202. The following detail and exception shall apply:

a. Test condition - D.

b. Application of torsion - The body of the component part or the clamped terminal shall be rotated through 360 degrees about the original axis of the bent terminal, in alternating directions, for a total of five rotations, at the rate of approximately 3 seconds per rotation.

4.8.6.2.2 Flat solder terminals. Any terminal that shows permanent deformation greater than 15 degrees of the metal portion of the terminal in the terminal-pull test specified in 4.8.6.1.2 shall be tested in accordance with method 211 of MIL-STD-202. This test does not apply to terminals that show permanent deformation but are not designed to be bent 45 degrees. The following detail and exception shall apply:

Source: https://assist.dla.mil -- Downloaded: 2016-11-03T19:10Z
Check the source to verify that this is the current version before use.

a. Test condition - B.

b. Number of bending operations - Five times through an angle of 90 degrees (45 degrees each side of center).

4.8.6.3 Torque.

4.8.6.3.1 Screw-thread terminals. Transformers and inductors shall be tested in accordance with method 211 of MIL-STD-202, test condition E.

4.8.6.3.2 All other terminals. All other terminals shall be subjected to the torque specified in method 211 of MIL-STD-202, test condition E. The torque for a terminal with a nominal diameter greater than 1/2 inch will be 160 ounce-inches The torque shall be applied to the terminal at the point where the external lead wires normally connect to it. The motion shall be applied clockwise and counterclockwise in a plane perpendicular to the axis of the terminal. The equivalent diameter is equal to two times the distance from terminal center to point of wire connection after maximum permanent deflection due to the pull test as indicated by the examples shown on figure 4. The equivalent diameter for "hook" type terminals is the diameter of the wire from which the terminal is formed.

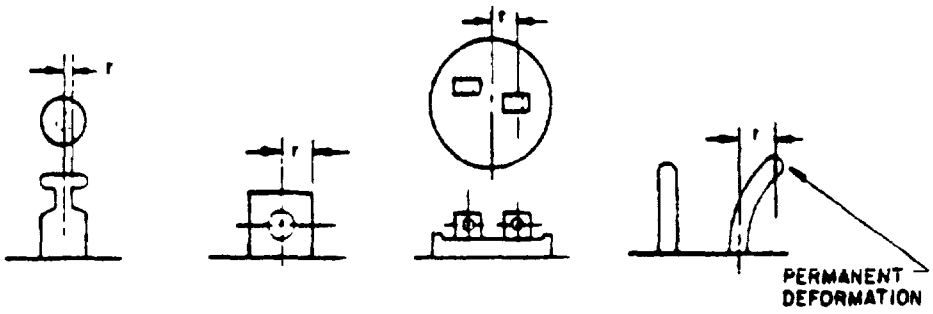

EQUIVALENT DIAMETER = 2r

FIGURE 4. Examples of determination of equivalent diameters.

4.8.7 Seal (grade 4) (see 3.11 and 6.15.13). Transformers and inductors shall be tested in accordance with 4.8.7.1, 4.8.7.2, or 4.8.7.3, as applicable. Any transformer or inductor which shows evidence of leakage may be given remedial treatment. After completion of the treatment, the seal test shall be repeated as evidence that such remedial treatment is adequate. All other units in the lot which have been given similar satisfactory remedial treatment shall be acceptable.

4.8.7.1 Liquid-filled units. Transformers and inductors shall be heated in an oven maintained at a temperature equal to or not more than 5°C greater than the sum of the specified maximum ambient temperature and the allowable temperature rise (see 3.1 and 6.1.2), for not less than 3 hours for transformers or inductors weighing 20 pounds or less, and for not less than 6 hours for transformers and inductors weighing over 20 pounds.

4.8.7.2 Gas-filled units. Transformers and inductors shall be tested in accordance with method 112 of MIL-STD-202. The following details shall apply

a. Test condition letter - C.

b. Leakage-rate sensitivity - 10^{-8} atm cm^3/s.

c. Procedure IV, as specified (see 3.1 and 6.1.2), test for gross leaks as specified in 4.8.7.3.

Source: https://assist.dla.mil -- Downloaded: 2016-11-03T19:10Z
Check the source to verify that this is the current version before use.

4.8.7.3 All other units. Transformers and inductors shall be immersed for 2 to 3 minutes in a bath of water (or other suitable liquid of no greater density or surface tension) maintained at a temperature of 85°C +5°C, -0°C. The temperature of the transformer or inductor shall not exceed 40°C at the time of immersion. (Or when specified, see 3.1 and 6.1.2, the following alternate test may be used; the transformers or inductors shall be immersed in a container of water containing approximately 1 percent wetting agent such as Aerosol which shall then be placed in a vacuum chamber. The pressure shall be reduced to 3.4 inches of mercury and maintained at this pressure for a period of at least 3 minutes.)

4.8.8 Dielectric withstanding voltage (see 3.12 and 6.14). Transformers and inductors shall be tested in accordance with 4.8.8.1, and 4.8.8.2 when applicable.

4.8.8.1 At atmospheric pressure. Transformers and inductors shall be tested in accordance with method 301 of MIL-STD-202. The following details and exceptions shall apply:

a. Magnitude of test voltage - As specified in table XI for transformer and inductor windings not grounded internally. However, where there is a high-voltage center-tap winding and another adjacent winding operated at a dc potential, the peak voltage that may be present between the windings should be considered in computing the test voltages. Test voltages greater than 1,000 volts rms shall be applied gradually at a rate not exceeding 500 volts rms per second.

TABLE XI. Dielectric withstanding voltage at atmospheric pressure.

Working voltage 1/	Rms test voltage (at 28 to 32 inches of mercury)
<50 - - - -	100
>50 to 100 incl - -	300
>100 to 175 incl- -	500
>175 to 700 incl- -	2.8 x working voltage
>700- - - -	1.4 x working voltage, +1,000

1/ The working voltage is defined as the maximum instantaneous voltage stress that may appear under normal rated operation across the insulation being considered. This insulation may be between windings or between a winding and the case or core.

b. Nature of potential - AC.

c. Duration of application of specified test voltage - Minimum of 5 seconds for quality conformance inspection, 1 minute for qualification inspection.

d. Points of application of test voltage:

(1) Winding to case or core - Between each winding and the case or core with all windings not under test grounded to the case (if cased) or to the normal mounting means (if uncased) and to the core (if accessible) (See 6.18.).

Source: https://assist.dla.mil -- Downloaded: 2016-11-03T19:10Z
Check the source to verify that this is the current version before use.

(2) Between windings - The voltage shall be applied between each winding and each of the other windings with all windings not under test grounded to the case (if cased) or to the normal mounting means (if uncased) and to the core (if accessible). These tests need not be made if the winding-to-case or -core test voltage of either winding under consideration is equal to, or greater than, the winding-to-winding test voltage. The method used to perform the between-windings dielectric-withstanding voltage test shall consist of two sources of test voltage, so proportionated and phased, that the winding-to-winding test voltages shall be according to table XII. One terminal of each source shall be grounded to the case (if cased), or to the normal mounting means (if uncased), and to the core (if accessible). The test voltages applied shall not exceed the test voltages required for each of the windings to ground, and shall be applied so that the required test voltage appears between the windings. Multiple-section windings designed for operation only in series or parallel shall be considered as a single winding. In no case shall the test voltage applied between the windings exceed the sum of the test voltages for each of these windings to the case (if cased) or to the normal mounting means (if uncased), and to the core (if accessible).

e. High voltage source shall have a minimum of 1 kilovolt-ampere capacity for voltages over a kilovolt.

f. Examination during and after test - Transformers and inductors shall be examined for evidence of arcing, flashover, breakdown of insulation, and damage.

4.8.8.1.1 For special designs. Transformer and inductor windings internally grounded or having any part of the winding designed for operation at or near ground potential shall be subjected to the induced-voltage test or a combination of the dc dielectric withstanding voltage on the low-voltage terminal together with induced voltage, as applicable (see 4.8.9) Windings with special dielectric features (e g., graded insulation) shall be subjected to the test voltage specified (see 3.1 and 6.1.2), or to the induced-voltage test (see 4.8.9). Dielectric withstanding voltage tests for pulse transformers shall be as specified (see 3.1 and 6.1.2).

4.8.8.2 At barometric pressure. Transformers and inductors designed for operation above 10,000 feet shall be tested as specified in 4.8.8.1 and in accordance with method 105 of MIL-STD-202. The following details and exceptions shall apply:

a. Test condition or altitude in feet if below 30,000 feet - As specified (see 3.1 and 6.1.2).

b. Magnitude of test voltage - As specified in table XII. A greater potential may be used at the option of the supplier.

TABLE XII. Dielectric withstanding voltage at reduced barometric pressure.

Working voltage 1/ Volts	Test voltage Volts, rms
≤ 50 - - - -	100
>50 - - - -	300 or 1.25 x working voltage: whichever is greater

1/ The working voltage is defined as the maximum instantaneous voltage stress that may appear under normal rated operation across the insulation being considered. This insulation may be between windings or between a winding and the case or core.

Source: https://assist.dla.mil -- Downloaded: 2016-11-03T19:10Z
Check the source to verify that this is the current version before use.

c. Examination during and after test - Transformers and inductors shall be examined for evidence of arcing, flashover, breakdown of insulation, and damage.

4.8.8.2.1 For special designs. When the induced-voltage test is used (see 4.8.8.1.1), it shall be performed at an atmospheric pressure equivalent to the altitude for which the transformer or inductor is rated, and the test voltage shall be sufficient to cause 125 percent of rated voltage to appear across the winding (see 3.1 and 4.8.9).

4.8.8.3 At reduced voltage. Transformers and inductors shall be subjected to the dielectric-withstanding voltage tests specified in 4.8.8.1, except that the test voltages shall be 75 percent (65 percent for life test) of the values shown in table XII and shall be applied for a period of 5 seconds.

4.8.9 Induced voltage (see 3.13) (this test is applicable when any winding has a rated voltage in excess of 25 volts rms). Transformers and inductors shall be subjected to the tests specified in 4.8.9.1 through 4.8.9.3, as applicable (see 6.7). During this test, the transformers and inductors shall be examined for evidence of continuous arcing, breakdown of insulation, and abrupt changes in the input current. Means shall be provided to indicate fluctuations of input current or changes in Q, as applicable.

4.8.9.1 All transformers and inductors except pulse, sonar and saturating core power (see 3.1 and 6.1.2). Transformers and inductors shall be subjected to a voltage sufficient to cause twice the rated voltage to appear across any winding. The test voltage shall be applied to any winding. Windings should be grounded as they would be in service. The test frequency shall be as selected by the manufacturer and shall be remote from any resonant frequency. The test potential shall be applied for 7,200 ±200 cycles, or 5 ±1/2 seconds, whichever is greater for qualification testing. For quality conformance inspection, the test potential shall be applied for 5 ± 1/2 seconds.

4.8.9.2 Pulse and sonar transformers and inductors. A test pulse voltage shall be applied for 1 minute to any winding at the specified rated repetition rate (see 3.1 and 6.1.2) sufficient to induce a voltage across any winding between 25 and 50 percent of the rated pulse width, in accordance with table XIII, and shall be performed in air. For grade 4 transformers and inductors, this test shall be repeated for units rated at greater than 10,000 volts at twice rated voltage with the transformer or inductor terminals under oil. At the option of the manufacturer, the test in air for grade 4 transformers and inductors may be made at twice the rated voltage, in which case the second test under oil will not be required. During the test, the transformer and inductor shall be loaded as specified and fitted with specified protective devices (see 3.1 and 6.1.2). The operation of any specified protective device shall not be a cause for failure. In the case of a magnetron load, a resistance equivalent to the static resistance of the magnetron can be used.

TABLE XIII. Induced voltage for pulse and sonar transformers and inductors.

Max voltage rating on highest voltage winding	Induced voltage
≤ 10,000	Twice rated voltage
>10,000 to 20,000 incl.	1.666 x rated voltage
>20,000 to 35,000 incl.	1.333 x rated voltage

4.8.9.3 Saturating core power transformers. Saturating core power transformers should be tested at the limit of their linear characteristics, using sine wave power sources at twice normal operating frequency. The test voltage shall be applied to any winding sufficient to cause twice the normal peak-to-peak voltage appear across any winding.

4.8.10 Insulation resistance (see 3.14). Transformers and inductors shall be tested in accordance with method 302 of MIL-STD-202. The following details and exceptions shall apply:

Source: https://assist.dla.mil -- Downloaded: 2016-11-03T19:10Z
Check the source to verify that this is the current version before use.

a. Test condition B for qualification inspection; and dc test potentials from 500 volts to 1,000 volts for quality conformance inspection. However, for quality conformance inspection, rejection shall be based on measurements made at 500 volts. For both qualification inspection and quality conformance inspection, the test voltage will be 100 volts if the working voltage is less than 175 volts and 50 volts if the working voltage is less than 25 volts.

b. Points of measurement.

(1) Winding to case or core - The potential shall be applied between each winding and the case or core with all windings not under test grounded to the case (if cased) or to the normal mounting means (if uncased) and to the core (if accessible).

(2) Between windings (for grade 5 units when mounting brackets or core are not accessible) - The potential shall be applied between each winding and all other windings connected together.

The measurements shall be made at any temperature above 20°C and at ambient room humidity, but rejections shall be based on measurements made at 25°C +10°C, -5°C and at a relative humidity not greater than 80 percent.

4.8.11 Electrical characteristics (see 3.15). The electrical characteristics shall be determined by the tests specified herein, as applicable (see 3.1, 6.1, and 6.14.11). Electrical tests included herein do not embrace all of the electrical tests that may be requested.

4.8.11.1 No load. Rated voltage at the frequency or frequencies specified (see 3.1 and 6.1.2) shall be applied to the primary with the secondary or secondaries open-circuited. The following shall be determined

a. No-load rms current (I_{nl}).

b. No-load power (P_{nl}).

c. Primary-tap and secondary rms voltages.

d. Center-tap voltage unbalance in percent = $\frac{(V_1 - V_2)}{V_1} \times 100$

The voltage unbalance shall be computed. V_1 and V_2 are the voltages of each part of the winding, and $V_1 \geq V_2$.

4.8.11.1.1 For vibrator or invertor transformers. The transformers shall be connected to ac sources at the specified frequency and voltage (see 3.1 and 6.1.2). The following shall be determined:

a. No-load true rms current (I_{nl}).

b. Primary tap and secondary true rms voltages.

c. Voltage unbalance (when applicable) using the method specified in 4.8.11.1d.

4.8.11.2 Rated load.

4.8.11.2.1 Unrectified outputs. Unrectified output secondary voltages shall be measured with the transformer primary excited at rated voltage at the specified frequency (see 3.1 and 6.1.2), and with rated rms load currents flowing in the secondary windings.

4.8.11.2.2 Rectified outputs. Rms voltages at the secondary terminals shall be measured with the transformer primary excited at rated voltage at the specified frequency, and with rated dc current flowing from a specified rectifier and filter in a resistive load (see 3.1 and 6.1.2).

Source: https://assist.dla.mil -- Downloaded: 2016-11-03T19:10Z
Check the source to verify that this is the current version before use.

4.8.11.2.3 For vibrator or inverter transformers. The vibrator or inverter transformer shall be tested in the circuit or simulated circuitry for which it is designed. The transformer primary shall be excited from the specified source. The secondaries shall be loaded as specified. The following shall be determined.

a. DC input voltage and current.

b. Secondary true rms voltage and current, or dc voltage and current as applicable.

c. Operating frequency and waveform characteristics (when specified).

4.8.11.3 DC resistance and resistive unbalance. The dc resistance of the windings shall be measured at, or corrected to 20°C. The resistive unbalance of center-tapped windings in percent $\frac{(R_1 - R_2)}{R_1} \times 100$ shall be computed. R_1 and R_2 are the resistances of each part of the winding, and $R_1 \geq R_2$. For resistances under 1 ohm, measurements shall be made with a Kelvin bridge or equivalent.

4.8.11.4 Inductance and inductive unbalance. The inductance of the windings shall be measured at the specified test voltage and frequency with the specified dc current applied (see 3.1 and 6.1.2). The inductive unbalance of center-tapped windings in percent $\frac{(L_1 - L_2)}{L_1} \times 100$ shall be computed. L_1 and L_2 are inductances of each part of the winding, and $L_1 \geq L_2$.

4.8.11.5 Harmonic distortion. The transformer shall be terminated in its proper source and load impedance. A sine-wave voltage of specified frequency shall be applied such that the specified output conditions are achieved and the total harmonic distortion shall then be computed or measured (see 3.1 and 6.1.2).

4.8.11.6 Primary impedance (for qualification and first article inspection only). Transformer primary impedance shall be measured with all normally loaded secondaries loaded with their specified impedances, and with specified dc currents flowing in the windings. The resistance and reactance looking into the primary shall be measured at the specified input frequency and voltage by a bridge or equivalent method approved by the Government (see 3.1).

4.8.11.7 Frequency response. Using the circuit shown on figure 5, with the specified values of impedance, sufficient EMF from the source of the specified reference frequency should be applied to present the specified voltage across the load impedance. Keeping the source EMF constant, the output voltage is then measured at the specified frequencies (see 3.1 and 6.1.2). The rated dc currents shall flow through the windings. The measuring device shall be a vacuum-tube voltmeter or equivalent instrument having high-impedance input circuit. The same type of instrument shall be used to measure the source EMF and the output voltage. Frequency response, in decibels (dB), may be determined for each instrument as follows:

$$dB = 20 \log \frac{E_f}{E_r}$$

Where:

E_r = reference output voltage.
E_f = output voltage at any other frequency.

A frequency spectrum instrument may be used as an alternate method of test.

4.8.11.8 Insertion loss. Transformers shall be tested in accordance with 4.8.11.8.1 or 4.8.11.8.2, as specified (see 3.1 and 6.1.2).

4.8.11.8.1 Insertion loss, for equal input and output impedance. Using the circuit shown on figure 6 with a constant voltage, Eg, across the generator, the load voltage, with and without the transformer in the circuit, shall be measured at the specified frequency (see 3.1 and 6.1.2). The insertion loss in dB, shall be calculated using the following formula:

Source: https://assist.dla.mil -- Downloaded: 2016-11-03T19:10Z
Check the source to verify that this is the current version before use.

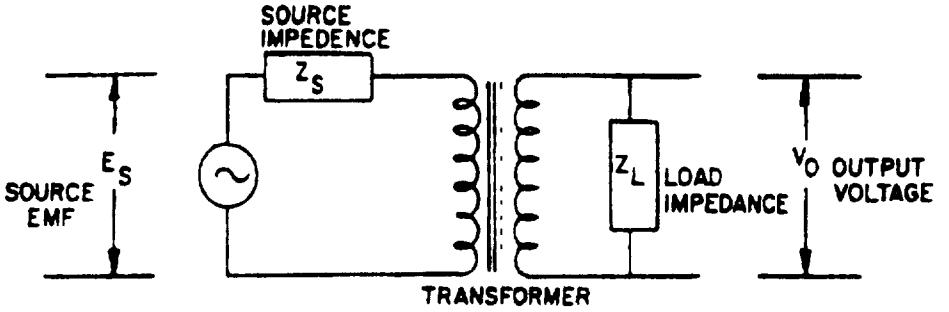

FIGURE 5. Frequency response circuit.

$$I.L. = 20 \log_{10} \frac{E_1}{E_2}$$

Where.

I.L. = Insertion loss (in dB) with ($E_g = E_1$) constant

E_1 = Voltage with the transformer not in the circuit at the specified frequency

E_2 = Load voltage with the transformer in the circuit at the specified frequency

4.8.11.8.2 Insertion loss for unequal input and output impedance. The insertion loss shall be determined as above using the test circuit on figure 6. The insertion loss shall be calculated using the following formula:

$$I.L. = 20 \log_{10} \frac{E_g}{2E_L} + 10 \log_{10} \frac{Z_L}{Z_S}$$

Where:

I.L. = Insertion loss (in dB)

E_g = Constant voltage across the generator

E_L = Load voltage with transformer in circuit

Z_S = Source impedance (to match the reflected input design impedance)

Z_L = Load impedance.

4.8.11.9 Self-resonant frequency. Unless otherwise specified (see 3.1 and 6.1.2) the self-resonant frequency shall be determined as follows, using the test circuit shown on figure 7. Starting at the lowest frequency within the specified frequency range, the frequency shall be increased and the VTVM or equivalent observed for voltage dip. The frequency at which the minimum dip occurs shall be recorded as the self-resonant frequency.

4.8.11.10 Coupling among units (multi-unit transformers and inductors). With any one of the units energized, as specified, at the geometric-mean frequency of the specified frequency range, the voltage induced in the highest voltage or impedance winding of any other unit shall be measured (see 3.1 and 6.1.2).

Source: https://assist.dla.mil -- Downloaded: 2016-11-03T19:10Z
Check the source to verify that this is the current version before use.

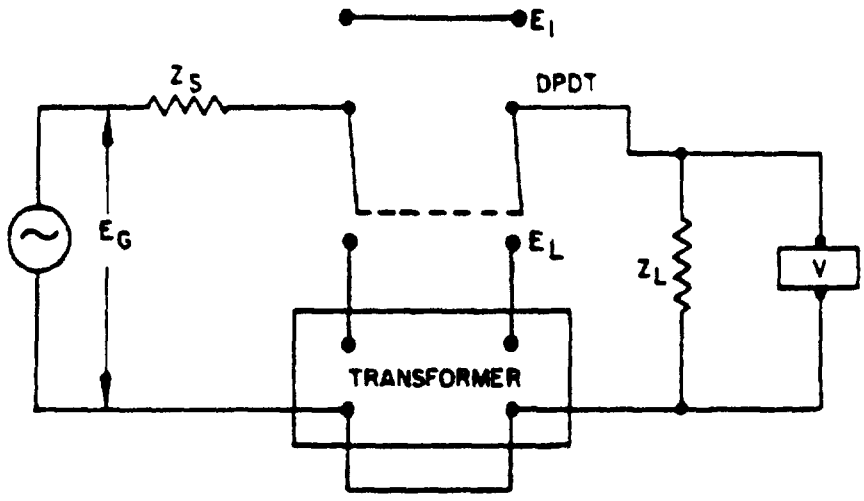

FIGURE 6 Typical measurement circuit for insertion loss

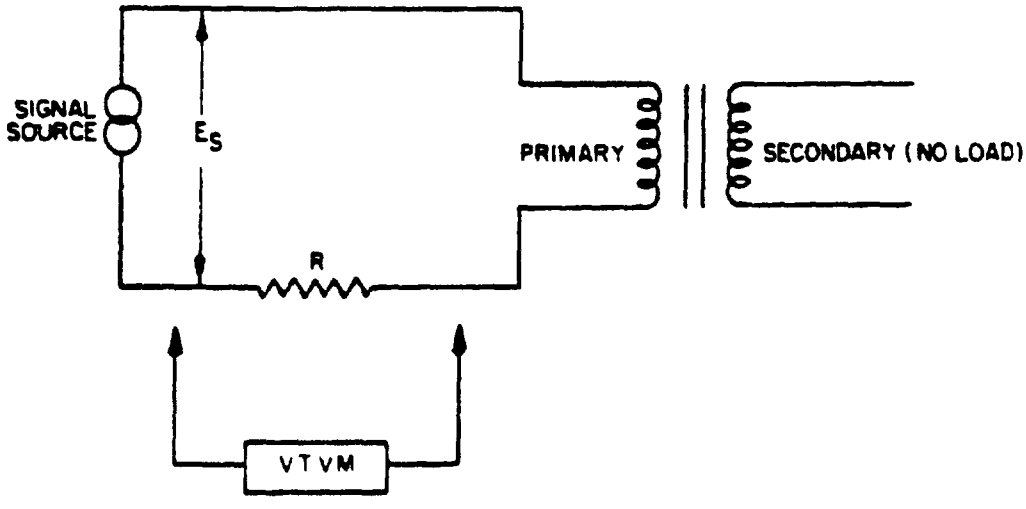

FIGURE 7 Measurement of SRF.

Source: https://assist.dla.mil -- Downloaded: 2016-11-03T19:10Z
Check the source to verify that this is the current version before use.

4.8.11.11 Electrostatic shielding. With all windings short-circuited and those on the same side of the electrostatic shield connected together, using the circuit shown on figure 8 the voltage of the signal generator at the specified frequency (see 3.1 and 6.1.2) shall be set to give a definite indication on the detector, with switch "S" open. With switch "S" closed, the generator voltage shall be increased so as to yield the same indication on the detector, and the ratio of the generator voltages shall be computed. The detector shall have a minimum input impedance of 1 megohm.

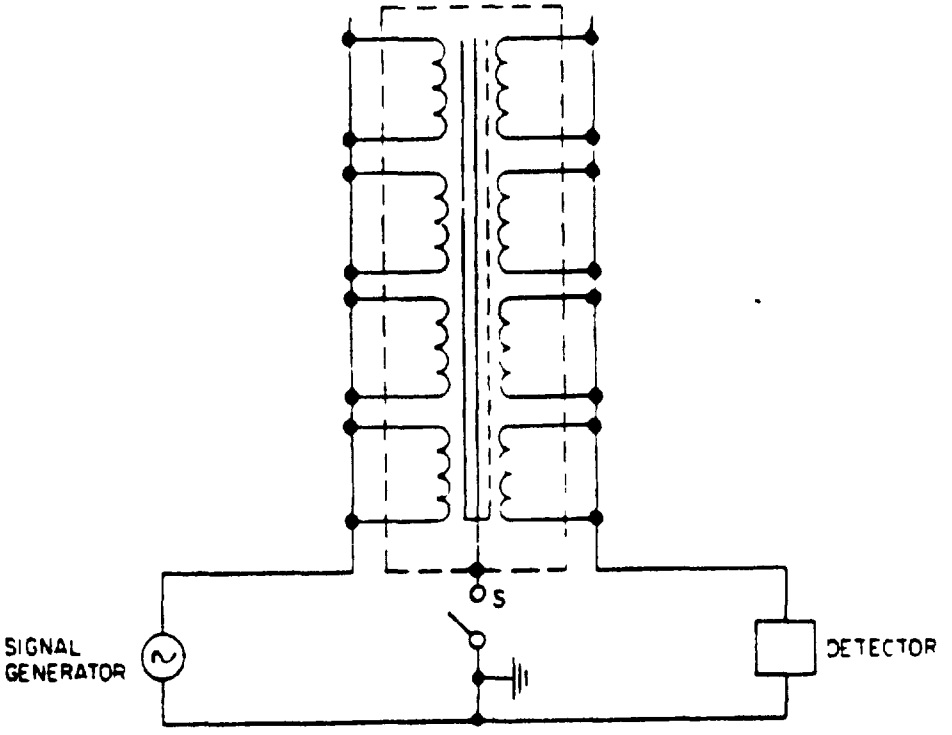

FIGURE 8. Electrostatic-shielding circuit

4.8.11.12 Magnetic shielding. The transformer or inductor shall be placed in the approximate center of a Helmholtz structure (see 6.7), consisting of two test coils placed coaxially 1 foot apart and connected in series aiding. Each coil shall consist of 1,500 turns of 0.00795-inch diameter (AWG size 32) wire, wound on a coil form having a radius of 1 foot and a length of 1 inch. A 115-volt, 60 Hz alternating voltage shall be applied across the series-connected coils, the transformer or inductor shall be rotated until the voltage across the highest voltage or highest impedance winding is a maximum, and this value shall be noted. The detector shall have a minimum impedance of 1 megohm.

4.8.11.12 1 Alternate test. The specimen under test shall be energized and the external field shall be measured by a suitable probe.

Source: https://assist.dla.mil -- Downloaded: 2016-11-03T19:10Z
Check the source to verify that this is the current version before use.

4.8.11.13 Center-tap balance at low levels (-20 to -80 dB m balance). Using the circuit shown on figure 9, adjust R_1 until V goes through minimum. Calculate the dB balance from:

$$dB = 20 \log \frac{R_2}{R_1 - R_2}$$

An alternate method may be used for center-tap balance by substituting a ratio transformer for R_1 and R_2 on figure 9. L_1 and L_2 will then replace R_1 and R_2 in the formula for calculating the dB balance.

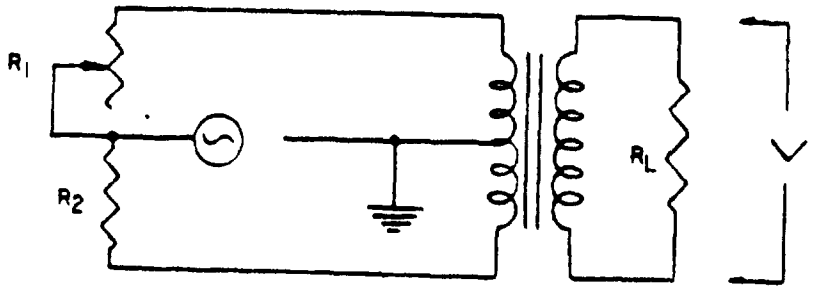

FIGURE 9. Center-tap balance

4.8.11.14 Polarity. With the transformer windings connected in series as specified (see 3.1 and 6.1.2), and with a voltage applied to one of the windings, comparison shall be made between the sum of the voltages across individual windings and the voltage across the series of windings. Any other suitable method of determining polarity is permissible.

4.8.11.15 Storage factor. Storage factor (Q) shall be measured under the conditions specified (see 3.1 and 6.1.2).

4.8.11.16 Wave shape. With the source and load conditions as specified (see 3.1 and 6.1.2), the wave shape of the output shall be determined.

4.8.11.17 Turns ratio or voltage ratio (as specified). The ratio shall be determined by the voltmeter method or any other suitable means.

4.8.11.18 Phase shift. The phase shift in electrical degrees attributable to a transformer shall be measured by a phase shift meter or other suitable methods.

4.8.11.19 Short-circuit test (for qualification or first article inspection only). With the secondary windings shorted in turn, the voltage applied to the primary shall be adjusted until the secondary is carrying rated current. The primary power in watts shall then be measured.

4.8.11.20 Capacitance (when specified (see 3.1 and 6.1.2)). Transformers and inductors shall be tested in accordance with method 305 of MIL-STD-202 for distributive or winding to winding capacitance as specified (see 3.1 and 6.1.2).

a. Test frequency - As specified (see 3.1 and 6.1.2).

b. Magnitude of polarizing voltage - As specified (see 3.1 and 6.1.2).

Source: https://assist.dla.mil -- Downloaded: 2016-11-03T19:10Z
Check the source to verify that this is the current version before use.

4.8.12 Temperature rise (see 3.16). Unless otherwise specified (see 3.1 and 6.1.2), the temperature-rise test shall be performed on transformers rated at more than 0.8-watt average output, and on inductors for which the product of the dc resistance and the square of the rated current is more than 0.2 watt. The temperature rise of each winding shall be based on the change-in-resistance method and shall be computed by the following formula:

$$\Delta T = \frac{R-r}{r}(t + 234.5) - (T-t)$$

Where

ΔT = Temperature rise (in °C) above specified maximum ambient temperature (see 3 1 and 6 1.2).

R = Resistance of winding (in ohms) at temperature ($T + \Delta T$).

r = Resistance of winding (in ohms) at temperature (t).

t = Specified initial ambient temperature (in °C).

T = Maximum ambient temperature (in °C) at time of power shutoff. (T) shall not differ from (t) by more than 5°C.

The transformers shall be conditioned for at least 8 hours at temperature (t) in a location free from drafts before resistance (r) is measured. For transformers, rated voltage shall be applied to the primary with the specified loads across the secondaries (see 3.1 and 6.1.2). For inductors, rated dc and ac current shall be applied to the windings. Transformers or inductors shall be operated until two consecutive resistance readings on the highest resistance winding, taken 30 minutes apart, are the same If the power is required to be shut off, the resistance measurements (R) shall be made as soon as possible. The transformers and inductors shall then be examined for evidence of physical damage. At the option of the supplier, the test may be performed at 60 Hz for transformers rated at 50/60 Hz provided that the primary voltage is increased to 1.2 times the rated voltage and the secondary currents are maintained at rated current. Unless otherwise specified (see 3.1 and 6.1.2) method I shall be used.

4.8.12.1 Method I.

4.8.12.1.1 For small units (units that will clear each wall of the cabinet by a minimum of 8 inches when supported 3 inches above the base). The transformers or inductors shall be supported in the test cabinet by means of low-thermal-conductivity cleats 3 inches in height. The samples shall be shielded from forced convection air-currents and from direct thermal radiation. The cabinet dimensions, insulation, air circulation, and all other factors influencing the thermal capacity shall be such that the ambient temperature does not increase more than 5 degrees during the determination.

4.8.12.1.2 For large units. Transformers or inductors with dimensions in excess of 8 x 8 x 13 inches shall be supported by means of low-thermal-conductivity cleats 3 inches in height, and shall be tested under standard test conditions (see 4.4) in still air.

4.8.12.2 Method II. Transformers and inductors shall be tested as specified in 4.8.12.1, except that the unit shall be mounted on brass spacers (according to the mounting-screw size) as specified in table XIV. The brass spacers shall be connected to a steel plate .125 inch thick and large enough to cover the bottom of the test enclosure within 2.00 inches on each side. For tests on large units, this plate shall be 2-feet square. When the mounting surface area is greater than 1 square foot, a 4-foot square plate shall be used. The brass spacers shall be tapped and shall be in intimate contact by threaded connections with the steel plate and that part of the case which normally rests on the mounting surface.

Source: https://assist.dla.mil -- Downloaded: 2016-11-03T19:10Z
Check the source to verify that this is the current version before use.

TABLE XIV. Brass spacers for temperature-rise test.

Mounting-screw size	Brass spacer (diameter and length
	Inches
.138 - - - - -	.38 x 3.00
.164 - - - - -	.56 x 3.00
.190 - - - - -	.69 x 3.00
.250 - - - - -	.81 x 3.00
.375 - - - - -	1.62 x 3.00
.500 - - - - -	1.75 x 5.00

4.8.12.3 Method III. Two transformers or inductors shall be mounted as specified in 4.8.12.2 and shall be placed side by side in a duct, with the longer sides parallel to the direction of air flow supplied by a blower rated at 50 cubic feet per minute. The blower shall be placed approximately 3 feet from the sample units. The distance between the two sample units and the distance between the sample units and the sides of the duct shall be 15 ±2 percent of the shorter side. Noncombustible baffles shall be used to adjust the duct to proper size. The air temperature within the duct shall be the specified maximum ambient temperature (see 3.1, 6.1.2, 6.11, and 6.12).

4.8.13 Corona discharge (see 3.17). When specified (see 3.1 and 6.1.2), transformers and inductors shall be tested in accordance with 4.8.13.1 or 4.8.13.2, as applicable. The oscilloscope used for this test shall have the sensitivity set at approximately 0.1 volt peak-to-peak per inch and shall have a reasonably uniform response up to 200 kilohertz. An oil-filled unit may be tested at any angle of inclination unless an angle is specified (see 3.1 and 6.1.2).

4.8.13.1 Intrawinding insulation. When specified (see 3.1 and 6.1.2), transformers and inductors shall be tested using circuit 1 of figure 10. The corona peak test voltage shall be applied under pressures equivalent to pressures ranging from sea level to the altitude specified (see 3.1 and 6.1.2) and shall be 130 percent of the applicable peak terminal voltage.

4.8.13.2 Interwinding insulation. When specified (see 3.1 and 6.1.2), transformers and inductors shall be tested using circuit 2 or 3 of figure 10, as applicable. The test voltages shall be applied under pressures equivalent to pressures ranging from sea level to the altitude specified (see 3.1 and 6.1.2), in the same manner as specified for the dielectric withstanding voltage test (see 4.8.8). The peak of the corona test voltages shall be 130 percent of the working voltages.

4.8.14 Salt spray (corrosion) (see 3.18). When specified (see 3.1 and 6.1.2). Transformers or inductors shall be tested in accordance with method 101 of MIL-STD-202.

a. Test condition - B.

b. Salt solution concentration - 5 percent.

c. Examination after exposure - Transformers and inductors shall be thoroughly washed. The temperature shall not exceed 38°C. The transformer or inductor shall be placed in an oven maintained at 50°C ±3°C for a period of 24 ±4 hours. At the end of this period, the transformers and inductors shall be removed from the oven and examined for corrosion.

4.8.15 Vibration (see 3.19). Transformers and inductors shall be tested in accordance with 4.8.15.1 or 4.8.15.2, as applicable.

Source: https://assist.dla.mil -- Downloaded: 2016-11-03T19:10Z
Check the source to verify that this is the current version before use.

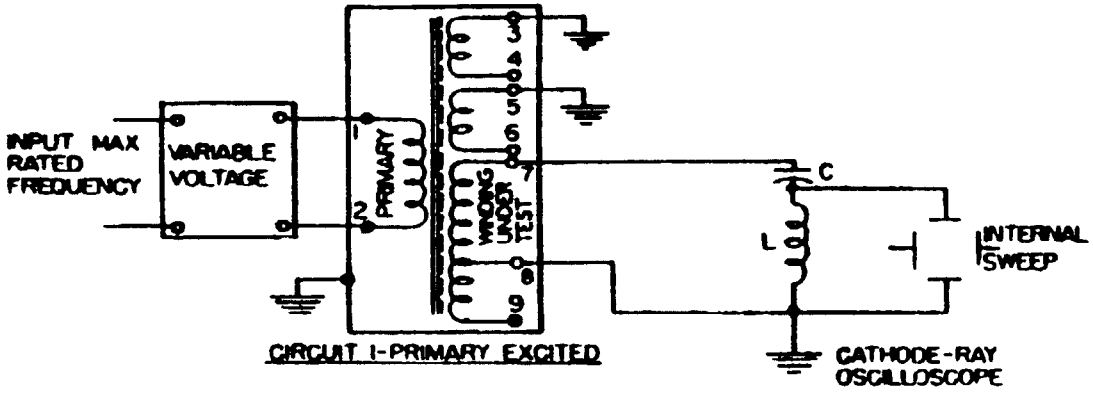

CIRCUIT 1-PRIMARY EXCITED

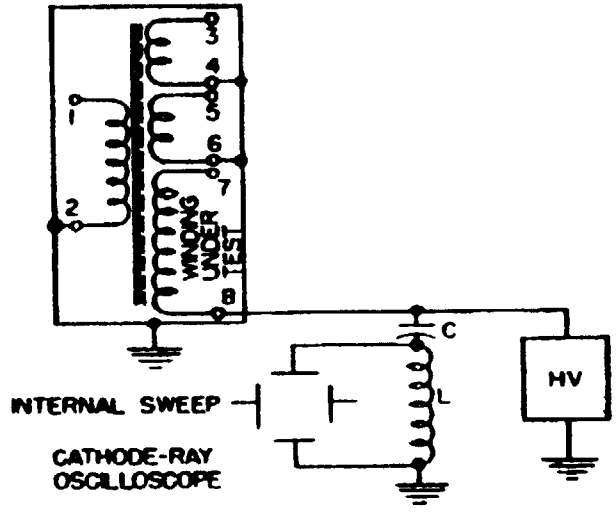

CIRCUIT 2-EXTERNAL HIGH-VOLTAGE SOURCE

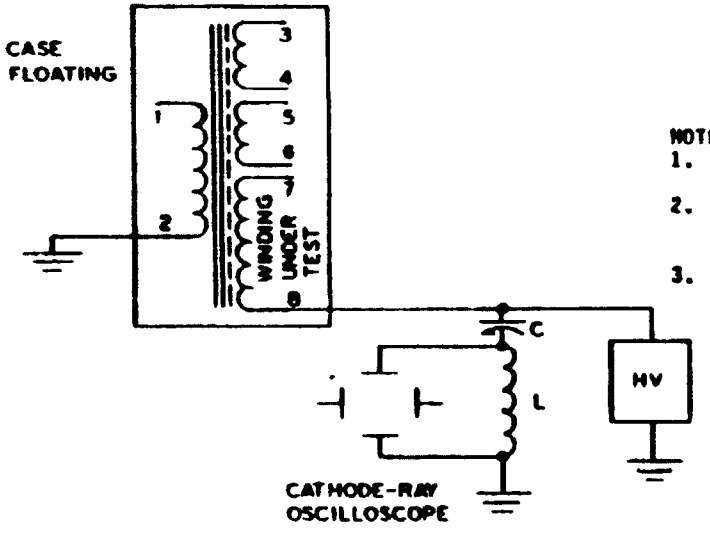

CIRCUIT 3- EXTERNAL HIGH-VOLTAGE SOURCE (CASE FLOATING)

NOTES:

1. When using circuits 1 and 2, ground the case of the transformer or inductor, and all windings except that being tested.
2. Legend for test circuits: C = 200 picofarad mica capacitor, corona free: L = RF choke, 20 to 30 millihenries inclusive, with a minimum Q of 50 at 100 kilohertz; HV = high voltage source, corona free.
3. Corona will be evident as a superimposed high-frequency oscillation on the basic power wave.

FIGURE 10. Corona test circuits.

Source: https://assist.dla.mil -- Downloaded: 2016-11-03T19:10Z
Check the source to verify that this is the current version before use.

4.8.15.1 Vibration, low frequency. Transformers and inductors shall be tested in accordance with method 201 of MIL-STD-202. The following details and exceptions shall apply.

a. Tests and measurements prior to vibration - Not applicable.

b. Method of mounting - Transformers and inductors shall be rigidly mounted by their normal mounting means.

c. Procedure - When specified (see 3.1 and 6.1.2), transformers and inductors shall be placed in a test chamber and preheated to the specified maximum ambient temperature for the class (see 3.1 and 6.1.2) plus one-half the allowable temperature rise. Vibration in each plane shall begin 5 minutes after removal from the test chamber.

d. Apparatus:

(1) For transformers and inductors weighing 10 pounds or less - May be tested on a horizontally- or vertically-vibrating machine. Units which are normally supported by their wire-lead terminals shall be mounted and soldered to rigidly supported terminals, so placed that the length of each wire-lead terminal shall be approximately .625 inch. Units which are mounted to printed circuit boards, may be supported during vibration by cementing the units to a vibration fixture or restraining the bodies of the units in casting wax, or other suitable means.

(2) For transformers and inductors weighing more than 10 pounds - The sequence of vibration shall be as follows: First vertically, and then horizontally in two mutually perpendicular directions. Two machines may be used (one vibrating horizontally and one vibrating vertically), or a single machine may be used which provides for both vertical and horizontal table motion, or a vertical vibrating machine, at the option of the supplier.

e. Examinations after vibration - Transformers and inductors shall be examined for evidence of leakage and physical damage.

4.8.15.2 Vibration, high frequency (when specified). Transformers and inductors shall be tested in accordance with method 204 of MIL-STD-202. The following details and exception shall apply:

a. Mounting of specimens - As specified in 4.8.1.15.1b.

b. Test-condition - D, unless otherwise specified.

c. Examinations after vibration - As specified in 4.8.15.1e.

4.8.16 Shock (see 3.20). Transformers and inductors shall be tested in accordance with 4.8.16.1, or when specified (see 3.1 and 6.1.2), in accordance with 4.8.16.2. The mounting of specimens shall be as specified in 4.8.15.1.

4.8.16.1 Specified pulse. Transformers and inductors shall be tested in accordance with method 213 of MIL-STD-202. The following details and exceptions shall apply:

a. Test conditon - I, unless otherwise specified.

b. Examinations after shock - Transformers and inductors shall be examined for evidence of leakage and physical damage.

4.8.16.2 High-impact. Transformers and inductors shall be tested in accordance with method 207 of MIL-STD-202. The following detail and exception shall apply:

a. Mounting fixtures - Figure "Standard mounting fixtures for electrical controller parts" of method 207.

b. Examinations after shock - As specified in 4.8.16.1b.

Source: https://assist.dla.mil -- Downloaded: 2016-11-03T19:10Z
Check the source to verify that this is the current version before use.

4.8.17 Winding continuity (see 3.21). All windings of transformers and inductors shall be tested for electrical continuity by any suitable means.

4.8.18 Immersion (grades 4 and 5) (see 3.22). Transformers and inductors shall be tested in accordance with method 104 of MIL-STD-202. The following detail and exception shall apply:

a. Test condition - B (for qualification inspection for grade 4); A (for qualification inspection for grade 5).

b. After final cycle - Transformers and inductors shall be washed under running tap water and dried. After the drying period, transformers and inductors shall be examined for evidence of leakage and other visible damage.

4.8.19 Moisture resistance (see 3.23). Transformers and inductors shall be tested in accordance with method 106 of MIL-STD-202. The following details and exceptions shall apply:

a. Mounting - On racks.

b. Initial measurements - Not applicable.

c. Conditioning - The 24-hour initial drying period prior to the first cycle may be omitted.

d. Polarization - Unless otherwise specified (see 3.1 and 6.1.2), polarization is applicable. The polarizing voltage shall be applied during steps 1 to 6 inclusive, between all windings not connected directly to the core or case, and the core or case. When the dielectric withstanding test voltage is less than 100 volts rms, a 50-volt dc polarizing voltage may be used. The polarizing voltage shall be positive with respect to the core and the case.

e. Loading voltage - Not applicable.

f. Final examinations:

(1) Grade 4 - Upon completion of step 6 of the final cycle, transformers or inductors shall be removed from the humidity chamber and shall be conditioned for a maximum of 8 hours at standard inspection conditions (see 4.4). After this conditioning period, dielectric withstanding voltage (at reduced voltage), induced voltage, and insulation resistance shall be measured at any temperature above 20°C and at ambient room humidity, but rejections shall be based on measurements made at 25°C +10°C, -5°C and at a relative humidity not greater than 80 percent.

(2) Grades 5 and 6 - Upon completion of step 6 of the final cycle, transformers or inductors shall be removed from the humidity chamber and the overload voltage shall be applied to the units as soon as possible after removal from the humidity chamber; in no case shall this interval exceed 6 hours.

g. Visual examination - Transformers and inductors shall be examined for any visible damage including corrosion and obliteration of marking.

4.8.20 Overload (see 3.24). The overload test shall be performed for a period of 48 hours for qualification inspection. When transformers and inductors attain an operating temperature of less than the maximum specified for the class during the temperature-rise test specified in 4.8.12, the ambient temperature for the overload test shall be increased above that specified to a value that results in an operating temperature equivalent to the maximum specified for the class (see 6.12). The overload shall be applied as specified in 4.8.20.1 and 4.8.20.2, as applicable. At the option of the manufacturer, the test may be performed at 60 Hz for transformers and inductors rated at 50/60 Hz and at 400 Hz for transformers and inductors rated at 360/400 Hz provided that the primary voltage is increased to 1.2 times the rated voltage for 50 Hz units and 1.1 times the rated voltage for 360 Hz units and the secondary currents are maintained at rated current before applying the overload as specified in 4.8.20.1 and 4.8.20.2. At the conclusion of the test, all transformers

Source: https://assist.dla.mil -- Downloaded: 2016-11-03T19:10Z
Check the source to verify that this is the current version before use.

or inductors shall be examined for leakage or other visible damage. Transformers or inductors shall be allowed to cool for approximately 8 hours at standard test conditions (see 4.4) before any additional tests are performed (see 6.9).

4.8.20.1 Transformers.

4.8.20.1.1 Output of less than 0.8 watt. Transformers rated at less than 0.8-watt output (except grade 4) shall be tested with 112 percent of rated ac and dc voltages applied, with no load, and at an ambient temperature equivalent to the maximum operating temperature for the class. The test shall not be performed on grade 4 transformers of this electrical rating.

4.8.20.1.2 Output of 0.8 watt or greater. For transformers rated at 0.8-watt output or greater, the rated voltage at the minimum frequency of the specified frequency range shall be applied at the rated duty cycle to the primary winding and with rated load connected to the secondary to set the load impedances. The input voltage shall then be raised to 112 percent of the rated voltage. When applicable, rated dc current shall also be applied during the test.

4.8.20.2 Inductors.

4.8.20.2.1 Rated power less than 0.2 watt. Inductors for which the product of the dc resistance and the square of the rated current is less than 0.2 watt (except grade 4) shall be tested with rated ac and dc voltages applied at an ambient temperature equivalent to the maximum operating temperature for the class. The test shall not be performed on grade 4 inductors of this electrical rating.

4.8.20.2.2 Rated power 0.2 watt or greater. Inductors for which the product of the dc resistance and the square of the rated current is equal to, or greater than 0.2 watt at the minimum frequency at the specified frequency range shall have 112 percent of all rated dc currents and ac voltages applied at the rated duty cycle.

4.8.20.3 Saturable core devices. Saturable core devices shall be tested as required by 4.8.20.2.1 or 4.8.20.2.2, as applicable, except that the load requried shall be adjusted to 112 percent of rated current output.

4.8.21 Flammability (grade 5) (see 3.26). Transformers and inductors shall be tested in accordance with method 111 of MIL-STD-202. The following details and exceptions shall apply:

a. Point of impingement of applied flame - One of the lower free corners, so that the flame is just in contact with the transformer or inductor. The free corners of the transformer or inductor are those corners which are the greatest distance from the mounting brackets. However, the flame shall be applied so that it will impinge upon the corner or area containing the encapsulating compound.

b. Allowable time for burning of visible flame on specimen - 3 minutes maximum.

c. Examinations during and after test - Transformers and inductors shall be examined for evidence of violent burning which results in an explosive-type fire, dripping of flaming material, and visible burning which continues beyond the allowable duration after removal of the applied flame.

4.8.22 Life (see 3.27) (life expectancy 10,000 hours). Unless otherwise specified (see 3.1 and 6.1), transformers with a rated output dissipation less than 0.8 watt shall be excited but not loaded. Transformers and inductors shall be subjected to 5 life cycles a week for a minimum of 12 weeks (2,016 hours). Four of the cycles shall consist of 20 hours during which time the transformers and inductors shall be operated at maximum operating temperature for the class, with loading equal to or greater than rated ac and dc voltages and currents, and 4 hours at room ambient temperature without excitation. The fifth cycle of the week shall be 68 hours at maximum operating temperature for the class with samples loaded as before and 4 hours without excitation at room ambient temperature. The electrical test circuit shall be devised so that an open circuit (see 3.27) or short circuit (see 3.27) during the 5 life cycles shall be detected and the time of failure recorded. For transformers only, the test may be performed with samples loaded back-to-back provided the above mentioned loading requirements are met. This test may be performed at any ambient

Source: https://assist.dla.mil -- Downloaded: 2016-11-03T19:10Z
Check the source to verify that this is the current version before use.

temperature provided that the maximum operating temperature for the class is held within +10°C, -5°C and no drafts or varying air velocities are present. At the option of the supplier, the test may be performed at 60 Hz for transformers rated at 50/60 Hz and at 400 Hz for transformers rated at 360/400 Hz provided the primary voltage is increased to at least 1.1 times the rated voltage and the maximum operating temperature for the class is attained. Upon completion of cycling after a minimum of 12 weeks, transformers and inductors shall be tested for insulation resistance (see 4.8.10), dielectric withstanding voltage (at atmospheric pressure) (see 4.8.8.3) using 65 percent of initial test voltage, and induced voltage (see 4.8.9), using a voltage sufficient to cause 1.3 times the rated voltage to appear across any winding. Samples shall also be examined for evidence of physical and electrical damage (see 6.8).

4.8.23 Fungus (see 3.28). Unless certification is provided, transformers and inductors shall be tested in accordance with method 508 of MIL-STD-810 (see 3.1 and 6.1.2).

5. PACKAGING

5.1 Preservation. Preservation shall be level A, B, or C, as specified (see 6.1).

5.1.1 Levels A and B.

5.1.1.1 Cleaning. Transformers and inductors shall be cleaned in accordance with MIL-P-116, process C-1.

5.1.1.2 Drying. Transformers and inductors shall be dried in accordance with MIL-P-116.

5.1.1.3 Preservative application. Preservatives shall not be used.

5.1.1.4 Unit packs. Transformers and inductors shall be individually unit packed in accordance with the unit pack requirements of table XV herein, insuring compliance with the applicable requirements of that specification.

5.1.1.5 Intermediate packs. Intermediate packs are not required.

5.1.2 Level C. The level C preservation of tranformers and inductors shall conform to the MIL-STD-794 requirements for this level.

5.2 Packing. Packing shall be level A, B, or C, as specified (see 6.1).

5.2.1 Level A. Transformers and inductors, preserved as specified in 5.1, shall be packed in accordance with the level A packing requirements of table XV. Closure and strapping shall be in accordance with the applicable container specification except that metal strapping shall conform to QQ-S-781, type I, finish A.

5.2.2 Level B. Transformers and inductors, preserved as specified in 5.1, shall be packed in accordance with the level B packing requirements of table XV . For fiber board containers, the requirements for box closure, waterproofing and reinforcing shall be in accordance with the appendix of the applicable box specification. Method V is required for containers conforming to PPP-B-636. For wood containers, closure and strapping shall be as specified in 5.2.1.

5.2.3 Level C. Transformers and inductors, preserved as specified in 5.1, shall be packed in accordance with the MIL-STD-794 requirements for this level.

5.2.4 Unitized loads. Unitized loads, commensurate with the level of packing specified in the contract or purchase order, shall be used whenever total quantities for shipment to one destination equal 40 cubic feet or more. Quantities less than 40 cubic feet need not be unitized. Unitized loads shall be uniform in size and quantities to the greatest extent practicable.

5.2.4.1 Level A. Transformers and inductors, packed as specified in 5.2.1, shall be unitized on pallets in conformance with the MIL-STD-147, load type I, with a wood cap (storage aid 5) positioned over each load.

Source: https://assist.dla.mil -- Downloaded: 2016-11-03T19:10Z
Check the source to verify that this is the current version before use.

TABLE XV. Preservation method, unit, supplementary and shipping container selection chart for levels A and B.

Unit packs				Packing	
Net weight of item (pounds)	Grades	Preservation method (or submethod) of MIL-P-116	Unit or supplementary container	Level A	Level B
≤2.99	4 & 5	III	PPP-B-566 or PPP-B-676	PPP-B-601, overseas type or PPP-B-621, class	PPP-B-636, class weather resistant
	6	IA-8			
3.00-9.99	4 & 5	III	PPP-B-636, class domestic		
	6	IA-8			
10.0-19.99	4 & 5	III	PPP-B-636, class weather resistant		PPP-B-636, class weather resistant, PPP-B-640, class 2; PPP-B-601, domestic type or PPP-B-621, class 1
	6	IA-14	Inner container: PPP-B-636, class domestic. Outer container: PPP-B-636, class weather resistant		
20.00-69.99	4 & 5	III	Unit container shall conform to the designated level of packing and shall serve as the shipping container.		
	6	IA-14	Inner container: PPP-B-636, class domestic. Outer container shall conform to the designated level of packing and shall serve as the shipping container.		
≥ 70.00	4 & 5	III	Unit container shall conform to the designated level of packing and shall serve as the shipping container.	PPP-B-601, overseas tyne or PPP-B-621, class 2. When the gross weight exceeds 200 pounds, skids shall be applied in accordance with the applicable specification.	PPP-B-601, domestic type or PPP B-621, class 1. When the gross weight exceeds 200 pounds, skids shall be applied in accordance with the applicable specification.

Source: https://assist.dla.mil -- Downloaded: 2016-11-03T19:10Z
Check the source to verify that this is the current version before use.

5.2.4.2 Level B. Transformers and inductors, packed as specified in 5.2.2, shall be unitized as specified in 5.2.4.1 except that weather resistant fiberboard caps (storage aid 4) shall be used in lieu of wood caps.

5.2.4.3 Level C. Transformers and inductors, packed as specified in 5.2.3, shall be unitized as specified in MIL-STD-794 except that conformance to MIL-STD-147 is not required.

5.3 Marking. In addition to any special or other identification marking required by the contract (see 6.2), each unit, supplementary and exterior container and unitized load shall be marked in accordance with MIL-STD-129. The complete military or contractor's type or part number, as applicable (including the FSCM), shall be marked on all unit and supplementary packs in accordance with the identification marking provisions of MIL-STD-129.

5.4 General.

5.4.1 Exterior containers. Exterior containers (see 5.2.1, 5.2.2, and 5.2.3) shall be of a minimum tare and cube consistent with the protection required and shall contain equal quantities of identical stock numbered items to the greatest extent practicable.

5 4.2 Packaging inspection. The inspection of these packaging requirements shall be in accordance with 4.7.2.

5.4.3 Army acquisitions.

5.4.3 1 Level A and B unit packs. In addition to that specified in table XVI, containers conforming to PPP-B-566, PPP-B-676, or PPP-B-636 shall either be weather or water resistant or overwrapped with waterproof barrier materials.

5.4.3 2 Level A and B packing. When the gross weight exceeds 200 pounds or the container length and width is 48 x 24 inches or more and the weight exceeds 100 pounds, 3 x 4 inch skids (laid flat) shall be applied in accordance with the requirements of the container specification. Palletization shall be required when the containers specified in 5.2.1 and 5.2.2 do not require skids; quantities per destination exceed either a total of 250 pounds (excluding the pallet) or a volume of 20 cubic feet, and the container size permits use of one of the pallet patterns of MIL-STD-147. A quantity of containers, packed as specified, except that container strapping may be omitted, shall be placed on a pallet, load type I conforming to MIL-STD-147. For level B, unit containers which meet these requirements may be palletized without further packing. The pallet shall conform to NN-P-71, type IV, group I or II woods. The load shall be "bonded" to the pallet by strapping conforming to QQ-S-781, type I, finish A, or shrink film conforming to L-P-378, type IV. Stretch wrap in accordance with MIL-STD-147 is authorized for shipments within the continental United States and for containerized shipments.

6. NOTES

6.1 Ordering data.

6.1.1 For transformers and inductors covered by coordinated specification sheets. Acquisition documents should specify the following.

a. Title, number, and date of this specification.

b. Title, number, and date of the applicable specification sheet, and the complete military part number (see 3.1).

c. Whether hardware is required for screw terminals or for stud mounting or both (see 3.5.2.4 and 3.5.3).

d. Levels of preservation and packing required (see 5.1 and 5.2).

e. If special or additional identification marking is required (see 5.3).

Source: https://assist.dla.mil -- Downloaded: 2016-11-03T19:10Z
Check the source to verify that this is the current version before use.

6.1.2 For transformers and inductors not covered by specification sheets. Acquisition documents should specify the following.

a. Title, number, and date of this specification.

b. Type designation covering the grade, class, family, and envelope and mounting dimensions (see 1.2 to 1.2.1.5, inclusive).

c. Applicable drawings covering envelope, mounting,weight, and other physical dimensions (see 1.2.1.5).

d. When first article inspection is performed (see 3.3), the following is required:

(1) The laboratory at which first article inspection is to be performed.

(2) Sample, submission of data, and inspection routine, if other than that specified (see 3.3 and 6.3).

e. Type of terminal (see 3.5.2).

(1) Specifications for pin-type terminals for use with printed circuit and electron-tube sockets (see 3.5.2.2 and 3.5.2.3).

(2) Whether hardware is required for screw terminals and detail requirements of screw terminals (see 3.5.2.4).

f. Whether hardware is required for mounting studs (see 3.5.3).

g. Whether the core is to be grounded to the case or accessible electrically (see 3.5.5).

h. Whether a paint finish is required and if it is to be applied to mounting surface (see 3.5.6).

i. Electrical characteristics and tolerances (see 3.15).

j. Whether the corona discharge test is required (see 3.17), and if so.

(1) The acceptable level of corona (see 3.17).

(2) The maximum angle of inclination (see 4.8.13).

(3) Required test circuit of figure 10 (see 4.8.13.1, 4.8.13.2, and figure 10).

k. Maximum ambient temperature and maximum allowable temperature rise (see 1.2.1.3, 3.16, and 4.8.12).

l. Marking (see 3.29).

(1) Additional information for marking of individual families (see 3.29.1 to 3.29.5, inclusive).

(2) Terminal identification if other than by numbering (see 3.29.6).

m. Rated voltages, loads, and tolerances (see 4.4.2).

n. Applicable electrical characteristics (see 4.8.11 to 4.8.11.20, inclusive).

o. Whether alternate seal test is required (see 4.8.7.3).

p. Dielectric withstanding test voltages for the following:

(1) Windings with special dielectric features (see 4.8.8.1.1).

(2) Pulse transformers (see 4.8.8.1.1).

Source: https://assist.dla.mil -- Downloaded: 2016-11-03T19:10Z
Check the source to verify that this is the current version before use.

q. Whether dielectric withstanding voltage test at reduced barometric pressure is applicable, and specify test condition (see 4.8.8.2).

r. Induced voltage:

(1) Frequency range for all transformers and inductors except pulse, sonar, and saturating core power (see 4.8.9.1).

(2) Pulse repetition rate for pulse and sonar transformers and inductors (see 4.8.9.2).

(3) Protective devices for pulse and sonar transformers and inductors (see 4.8.9.2).

s. Fungus (see 4.8.23).

t. Temperature rise:

(1) If 4.8.12.1 is not applicable, whether 4.8.12.2, or 4.8.12.3 is applicable.

u. Vibration test (see 4.8.15).

(1) Whether 4.8.15.1 or 4.8.15.2 is applicable.

(2) If 4.8.15.2 is applicable, the test condition shall be specified if other than D.

(3) During vibration test, whether transformers and inductors are to be preheated in a test chamber to the specified maximum ambient temperature for the class plus one-half the allowable temperature rise (see 4.8.15.1).

v. Shock test (see 4.8.16).

(1) The test condition shall be specified if other than 1.

(2) Whether high impact is applicable (see 4.8.16.2).

w. Whether polarization is not applicable during moisture resistance test (see 4.8.19).

x. Levels of preservation and packing required (see 5.1 and 5.2).

y. If special or additional identification marking is required (see 5.3).

z. Whether salt spray test is required (see 3.18).

aa. Whether thermal shock screening is required (see 4.8.4.1) number of cycles.

6.2 Qualification. With respect to products requiring qualification, awards will be made only for products which are at the time set for opening of bids, qualified for inclusion in the applicable qualified products list, whether or not such products have actually been so listed by that date. The attention of the contractors is called to this requirement, and manufacturers are urged to arrange to have the products that they propose to offer to the Federal Government tested for qualification in order that they may be eligible to be awarded contracts or purchase orders for the products covered by this specification. The activity responsible for the qualified products list is Electronics Command; however, information pertaining to qualification of products may be obtained from the Defense Electronics Supply Center (DESC-E), Dayton, Ohio 45444 (see 3.2).

6.3 First article inspection. Information pertaining to first article inspection of products covered by this specification should be obtained from the acquiring activity for the specific contracts involved (see 3.3).

6.4 Envelope and mounting dimensions. Equipment designers should give first consideration to using the various case configurations shown on figure 1.

Source: https://assist.dla.mil -- Downloaded: 2016-11-03T19:10Z
Check the source to verify that this is the current version before use.

6.5 Dielectric withstanding voltage. Users of transformers and inductors should note that the units have been previously tested at 100-percent dielectric withstanding voltages at least one or more times and, therefore, should be tested only at 75 percent test voltage during subsequent inspections such as during incoming inspection by a purchaser. For units with a working voltage in excess of 10 kV, corona measurements should be considered instead of dielectric withstanding voltage.

6.6 Induced voltage test for inductors. For inductors, the test voltage is applied directly across the coil.

6.7 Magnetic shielding. The approximate magnetic field strength for the Helmholtz structure described in 4.8.11.12 and illustrated on figure 11, is 43.6 oersteds per peak ampere.

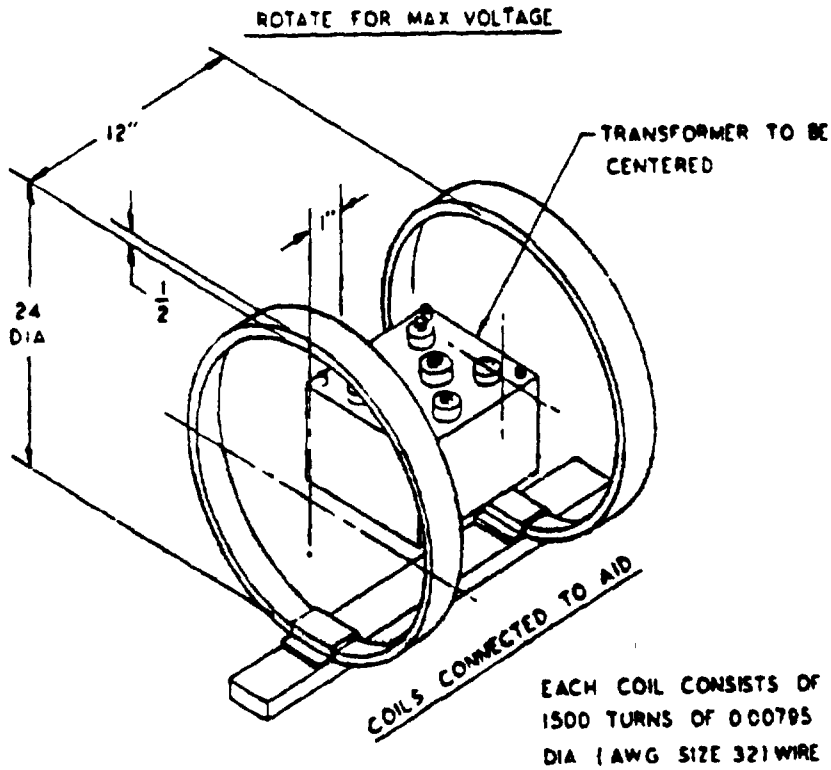

FIGURE 11. Helmholtz structure for magnetic shielding.

6.8 Overload and life tests (method of mounting). Whichever method (1, 2, or 3) of the temperature rise test is used, that same method of mounting may be used for the overload and life tests at the option of the manufacturer.

6.9 Notes for airborne application.

6.9.1 Laminated phenolics. It is recommended that laminated phenolics not be used in locations where they would be exposed to heavy electric discharges during normal operations or under faulty conditions, because of the flammable conditions that might occur.

6.9.2 Transformer and inductor sizes. Manufacturers should strive to provide the smallest and lightest transformers and inductors.

6.10 Temperature rise (method III). Figure 12 is an example of two units placed in a duct for method III of the temperature rise test. "A" indicates the longer side, and "B" indicates the shorter side (see 4.8.12.3).

Source: https://assist.dla.mil -- Downloaded: 2016-11-03T19:10Z
Check the source to verify that this is the current version before use.

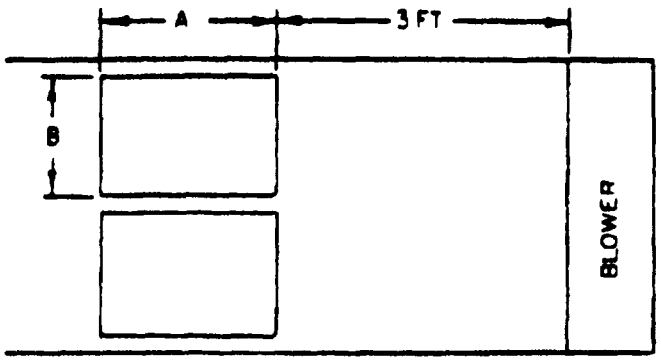

FIGURE 12. Typical mounting of units for method III of temperature-rise test.

6.11 Ambient temperature increase. Ambient temperature increase for use under 4.8.20 will be derived on an assumed linear extrapolation. For example, a class R unit operated under 4.8.12 at an ambient temperature of 70°C with a 20°C temperature rise would be operated under 4.8.20 at an ambient temperature of 85°C (105°C - 20°C = 85°C).

6.12 Test circuits for electrical characteristics. The actual circuit may be used for group B electrical inspection testing in lieu of the test circuits specified herein (see 4.8.11).

6.13 Reduction of dielectric withstanding voltage testing. When the dielectric-withstanding voltage potential required between windings is greater than that required between windings and ground, and where there is sufficient insulation used in the construction of the transformer or inductor, a reduction of testing may be accomplished by specifying a sufficiently high winding-to-ground potential so that it includes the required test potential between windings.

6.14 Notes regarding general applications for equipment designers. The equipment designer, by proper application of the information contained in the following paragraphs, can communicate to the transformer or inductor designer of the supplier a more complete understanding of his requirements and thus realize better equipment reliability. This will also prevent the costly overspecification of requirements not needed for the intended use.

6.14.1 Specificaion sheet transformers and inductors. For any transformer or inductor requirement, the specification sheets listed in supplement 1 should first be reviewed and if usable for the requirement, should be specified.

6.14.2 Grades. Grades 1, 2, and 3 have been deleted from this revision, leaving grades 4, 5, and 6 only. All new designs initiated and established as of and after the effective date of this specification shall be either grade 4, 5, or 6. Grades 4, 5, and 6 units shall be used in place of grades 1, 2, and 3 units, respectively, where such units are to be used by equipment manufacturers in newly built equipment whose specifications originally required grade 1, 2, or 3. However, for the purposes of supplying spare parts for existing equipments now in field use grade 1, 2, or 3 units may be supplied provided that grade 1, 2, or 3 are so designated on the drawing or detail specification for the particular item and provided that the spare parts are not military standard items. All military standard items supplied as of the effective date of this specification must be grade 4, 5, or 6.

6.14.2.1 Grade 1. Grade 1 units are sealed, metal encased units with separately fabricated headers and terminals. This grade does not include units which are encapsulated in a metal shell with an opening in either end or side of the shell or with insulated lead wire exiting through the metal shell. Grade 1 units do not require the thermal shock, vibration, shock and flammability environmental tests of table I.

Source: https://assist.dla.mil -- Downloaded: 2016-11-03T19:10Z
Check the source to verify that this is the current version before use.

6.14.2.2 Grade 2. Grade 2 units are encapsulated, including molded or embedded constructions, and units with a metal shell, open at one or both ends and filled with encapsulant material. Grade 2 units do not require the thermal shock, vibration and shock environmental tests of table I.

6.14.2.3 Grade 3. Grade 3 units are open type and are generally intended for subsequent potting, molding, or embedment in an assembly with or without component parts. Grade 3 units do not require the thermal shock, sealing, immersion, vibration, shock and flammability environmental tests of table I.

6.14.3 Temperature. The class designation in table II refers solely to maximum operating temperature and has no relation to types of insulation material. Any insulation material may be used in any class of transformer or inductor, depending entirely upon the maximum operating temperature and its associated life expectancy. The maximum operating temperature refers to the maximum ambient temperature specified for equipment operation plus the internal temperature rise at the time that thermal stability is reached; however, since the temperature rise of audio transformers is negligible, the maximum operating temperature, in most cases, is the same as the maximum ambient temperature. It should be noted that where the total of the specified maximum ambient temperature and the specified allowable temperature rise exceeds, by any amount, the maximum operating temperature for any given class, the unit must be described by the letter designating the next higher class designation and meet the requirements thereof.

6.14.3.1 Maximum operating temperature. The maximum operating temperature is the same as the allowable temperature rise plus the maximum ambient temperature for the class. Accordingly, temperature rise is the allowable temperature differential between the ambient and maximum operating temperature for a given insulation for a specified life. For example, class R has a maximum operating temperature designation of 105°C; this is normally at 65°C ambient plus a 40°C rise. If the temperature rise was determined to be 30°C, this same transformer could operate in an ambient as high as 75°C (75°C +30°C = 105°C).

6.14.3.2 Temperature rise. Temperature rise is normally measured and rated at sea level. At higher altitudes, the temperature rise will increase and should be compensated for in the equipment design.

6.14.3.3 Ambient temperature. It is not recommended that a higher operating ambient temperature be specified than that to which the transformer or inductor will actually be exposed. To do so may result in a larger and heavier unit than is needed. In the absence of a specified ambient temperature in the individual document, the following ambient temperatures may be used for the temperature rise test; class Q (65°C), class R (65°C), and class S (85°C).

6.14.4 Envelope and mounting dimensions. Equipment designers should give first consideration to using the various standard case sizes (or envelope and mounting dimensions) shown on figure 1. The use of standard case sizes results in lower costs and faster delivery, since these cases are generally immediately available from case suppliers' stock and are based on the use of standard laminations. However, when size is important, it is often necessary to utilize special cores, core materials, and improved types of insulation, with resultant higher costs and delayed deliveries.

6.14.4.1 Overspecified characteristics which affect case size. The unrealistic overspecifying of certain charcteristics can result in a much larger transformer than should be required. For this reason, do not specify:

a. Greater than actual power requirment.

b. Lower frequency than actual requirement.

c. Lower dc resistance than actual requirement.

d. Higher dc current than actual requirement.

e. Higher than actual ambient temperature or higher temperature class.

f. Higher than actual working voltage (including voltage peaks).

Source: https://assist.dla.mil -- Downloaded: 2016-11-03T19:10Z
Check the source to verify that this is the current version before use.

g. Better regulation (lower percent) than actual requirement.

h. Excessive life expectancy.

6.14.5 Terminal torque. When connecting to terminals with external screw threads, care should be taken not to tighten nuts with torques exceeding those indicated in method 211 of MIL-STD-202.

6.14.6 Working voltage. The working voltage marked on the transformer or inductor represents the maximum voltage stress that may appear, under normal rated operation, across the insulation being considered. This voltage is based on the circuitry with which the unit is associated. The working voltage marking enables personnel testing the units to determine the correct dielectric withstanding test voltages to be applied.

CAUTION: DO NOT USE TEST VOLTAGES AS THE OPERATING WORKING VOLTAGES OF THE TRANSFORMER OR INDUCTOR.

6.14.7 Overload. Transformers and inductors designed in accordance with this specification are capable of withstanding an overload of 12 percent for 48 hours.

6.14.8 Altitude rating. The altitude rating marked on the transformer or inductor indicates that the associated working voltages are based on a pressure equivalent to this altitude. However, the units can still be operated at higher altitudes if the working voltages are properly derated.

6.14.9 Marking. Detailed marking requirements are indicated in 3.29.1 to 3.29.6 inclusive. Where conditions are such that less information is required or desired, such information must be clearly specified in the acquisition document.

6.14.10 Environmental characteristics. Care should be exercised in specifying environmental test requirements to insure that the unit should be tested in a manner compatible with the environment actually present. Thus, for example, if the end equipment is to be shock mounted, sealed, or will include cooling facilities, the transformer or inductor may encounter a less stringent environment. However, it should be noted that the effect on a transformer or inductor of the conditions to which an equipment is subjected, because of position or method of mounting, may be entirely different from the effect on the end equipment as a whole.

6.14.11 Electrical characteristics. Only those characteristics and tolerances which are pertinent to the particular design should be specified. Normally pertinent characteristics, arranged by groups of applications, are indicated in the following paragraphs. (All the listed characteristics may not be applicable to each design; also, the listed characteristics do not embrace all of the characteristics which may be applicable).

6.14.11.1 General. Where possible, the associated circuitry should be shown for reference, indicating tube types, and other important component parts, in order to aid in obtaining optimum design.

6.14.11.2 Power transformers.

a. Nominal primary voltage and possible variation. (Taps on winding are to be clearly defined.)

b. Operating frequency range.

c. Secondary rms load voltages with allowable tolerance at nominal input voltage and rated loads.

d. Secondary rated rms and dc load currents and possible variations.

e. Allowable regulation - The basis for regulation should be clearly stated, e.g., 5 percent to 100 percent load, over temperature range, etc.

f. Electrostatic shielding in accordance with 4.8.11.11, including the minimum ratio of attenuation.

g. Polarity of windings

Source: https://assist.dla.mil -- Downloaded: 2016-11-03T19:10Z
Check the source to verify that this is the current version before use.

h. Surge conditions and transient peaks.

i. Corona limits should never be specified unless absolutely necessary.

j. Capacitive or inductive input should be specified if used in a rectifier or filter circuit.

k. Allowable dc resistance of each winding.

6.14.11.3 Inductors.

a. Rated inductance and required limits at nominal rms voltage and frequency, and dc current.

b. Allowable dc resistance.

c. Storage factor (Q) at the specified voltage and frequency.

6.14.11.4 Audio transformers.

a. Source and load impedances.

b. Allowable variations in primary impedance when operating into rated load on secondaries at the specified frequency.

c. Primary and secondaries dc currents.

d. Frequency response at the specific power level.

e. Harmonic distortion (percent) at the specified frequency and power level.

f. Insertion loss at the specified frequency.

g. Copper efficiency.

h. Self-resonant frequency.

i. Electrostatic shielding in accordance with 4.8.11.11.

j. Magnetic shielding in accordance with 4.8.11.12.

k. Polarity.

l. Phase shift.

m. Resistive, inductive, and capacitive unbalances, if applicable.

6.14.11.5 Saturating core power transformers.

a. Test circuit for intended use.

b. Drive transistors.

c. DC source voltage and range of variation.

d. Output load currents.

e. Design frequency.

f. Allowable regulation - The basis for regulation should be clearly stated, e.g., 5 to 100 percent load over temperature range, etc.

g. Polarity of windings.

h. Filter input circuit if used in rectifier application.

i. Rise and fall times, maximum overshoot etc., if applicable.

Source: https://assist.dla.mil -- Downloaded: 2016-11-03T19:10Z
Check the source to verify that this is the current version before use.

6.14.12 Resistance to solvents. If resistance to solvents test is not performed, the manufacturer shall certify that the intended use of the transformer or inductor is not for printed circuit application.

6.14.13 Seal. Where doubt exists to the adequacy of the seal, due to emission to bubbles, an IR test shall be performed and if less than 10,000 megohms additional tests shall be performed.

6.15 Center-tapped secondary A center-tapped secondary is described by the winding end-to-end voltage with a tap at the midpoint (example 3600 VCT).

6.15.1 Center-tapped secondary supplying unrectified loads. The current refers to the rms current flowing from end-to-end of the winding. Unless otherwise specified, the center-tap lead does not carry the load current (see figure 13.)

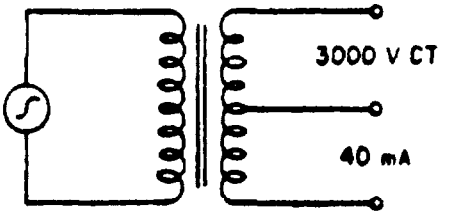

FIGURE 13. Center-tapped secondary supplying unrectified loads.

6.15.2 Center-tapped secondary supplying rectified loads. The winding current is the rms equivalent of the dc load current. The rms current is dependent upon the type of filter used with the rectifier. The type of filter and the dc load current must be specified. (EXAMPLE Capactive input filter, 100 mA dc load.) Unless otherwise specified, the center-tap lead carries the full dc load current (see figure 14).

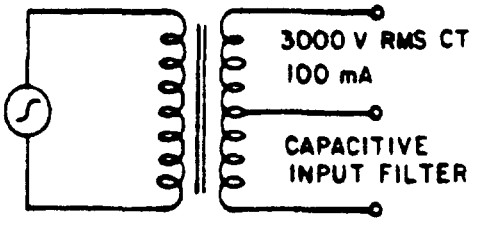

FIGURE 14. Center-tapped secondary supplying rectified loads.

Source: https://assist.dla.mil -- Downloaded: 2016-11-03T19:10Z
Check the source to verify that this is the current version before use.

6.15.3 Center-tapped audio transformers:

a. Direct current can flow into the center-tap and divide through the halves of the winding to provide bias for push-pull tubes or transistors. Either half of the secondary winding may be used alone. In this case, the impedance will be one-fourth of the total, or 500 ohms, since impedance is proportional to the square of the turns. The dots at terminals 2 and 3 represent polarity. (See figure 15).

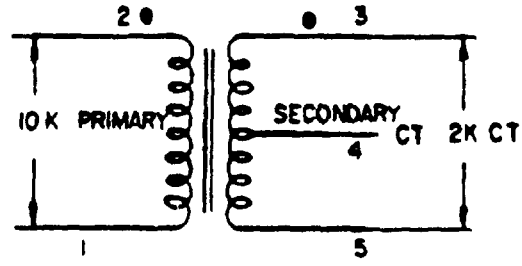

FIGURE 15. Center-tapped audio transformer.

b. In this case the secondary winding is described as "8,000 ohms split." This signifies that the secondary is composed of two separate windings. These windings may be connected in series (4,000 + 4,000 ohms) for the 8 K rating or in parallel for the 2 K rating. The split winding when used in parallel performs more efficiently than a comparable center-tapped transformer of which only half the winding is used. The dots at terminals 1, 4, and 6 represent identical polarities. (See figure 16).

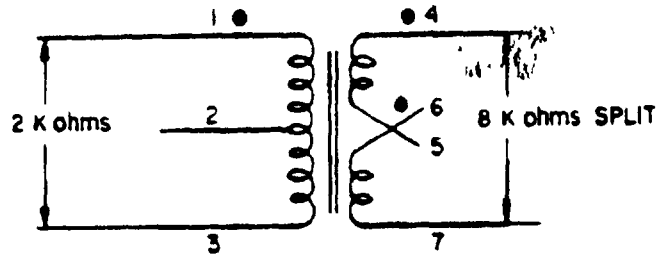

FIGURE 16. Center-tapped audio transformer (split secondary winding).

6.16 Deletion of families. A number of families have been deleted from this specification. For replacement purposes, use the following

Present families	*Replaced families
03	01, 02, 05, 06, 07, 08, 09, 22, and 54
04	07, 09, 53, and 54
20	51, 53, and 54
21	10 through 19, 21, 22, 50, 52, and 54
36	31 through 35 and 54
37	---
40	---
41	---

Source: https://assist.dla.mil -- Downloaded: 2016-11-03T19:10Z
Check the source to verify that this is the current version before use.

*Where a replaced family appears more than one time, the intended use of the item will dictate which of the present family codes should be assigned.

6.17 Dielectric withstanding voltage (at atmospheric pressure) (points of application of test voltage, winding to case or core). Grade 5 units (when applicable) shall be wrapped lightly with metal foil on as many surfaces as practicable in lieu of a metal case.

6.18 International standardization agreement. Certain provisions of this specification are the subject of international standardization agreement (NEPR No. 20). When amendment, revision, or cancellation of this specification is proposed which will affect or violate the international agreement concerned, the preparing activity will take appropriate reconciliation action through international standardization channels including departmental standardization offices, if required.

6.19 Conditions for use of level B preservation. When level B preservation is specified (see 5.1.1), this degree of protection should be used for transformers and inductors under known favorable conditions during transportation, storage, and handling.

Custodians.
Army - ER
Navy - EC
Air Force - 85

Review activities:
Army - AR
Air Force - 11, 17, 85
DLA - ES

User activities:
Army - ME
Navy - MC
Air Force - 19

Agent:
DLA - ES

Preparing activity.
Army - ER

(Project 5950-0621)

Source: https://assist.dla.mil -- Downloaded: 2016-11-03T19:10Z
Check the source to verify that this is the current version before use.

APPENDIX

SUBMISSION FOR QUALIFICATION INSPECTION

10. SCOPE

10.1 This appendix details the procedures for submission of samples, with required data, for qualification testing and approval of transformers and inductors covered by this specification. The information contained herein is intended for companies.

20. APPLICABLE DOCUMENTS

This section is not applicable to this appendix.

30. SUBMISSION

30.1 Qualification of transformers and inductors based on complete testing.

30.1.1 Identification data required.

a. Type designation of the transformer or inductor described on a specification sheet. (Transformers or inductors covered by existing specification sheets.)

b. For transformers or inductors that are comparable with an item covered by an existing specification sheet and the requirements of which can be added to the sheet, the information of figure 17 shall be submitted. For transformers or inductors that cannot be added to an existing specification sheet, a complete specification sheet shall be submitted, encompassing the information required by figure 17. The specification sheet shall be in the format of existing specification sheets and shall be suitable for reproduction by the photo-offset method.

30.1.2 Sample. A sample consisting of eight of each type of transformer or inductor for which qualification is sought shall be subjected to the tests of table VI. Four sample units shall be subjected to the inspections of group I. Eight sample units which include the four units from group I shall be subjected to the inspections of group II. Six sample units shall be subjected to the inspections of group III. The two remaining sample units from group II shall be subjected to the inspection of group IV. Two additional sample units will be required for group V, if the fungus test is performed.

30.2 Qualification of transformers and inductors based on similarity. Only transformers or inductors which have passed the complete tests of table VI shall be used as basis for comparison for qualification based on similarity.

30.2.1 Similar transformers or inductors. A similar transformer or inductor is defined as a transformer or inductor which when compared to a specific qualified transformer or inductor meets the following criteria:

a. Same or lower class.

b. Same type of external and internal mountings; similar shape; same type of case construction; nominal wall thickness within 25 percent when a case is used.

c. Linear envelope dimensions not greater than 150 percent nor less than 70 percent of the corresponding dimensions; total volume of envelope not greater than 250 percent.

Source: https://assist.dla.mil -- Downloaded: 2016-11-03T19:10Z
Check the source to verify that this is the current version before use.

d. To be used at same or lower operating voltages, and same or lower dielectric stress per mil of same insulation.

e. Same or greater wire size (cross sectional area) and same wire coating material for corresponding windings.

1/ f. Same processing material for case, finish, marking.

g. Same processing material for potting, insulation, impregnating and filling.

h. Same grade.

i. To be used at same or lower altitudes.

j. Same terminal construction and material including insulating and gasketing parts; same or lower terminal strength requirements for the same size terminals.

k. Same shock and vibration requirements.

30.2.2 Identification data required. The data required shall be in accordance with 30.1.1b and that required by figure 18 shall also be submitted.

30.2.3 Sample. A sample consisting of 3 sample units of each type for which qualification is sought shall be subjected to the inspection specified in table VII.

1/ This criteria may be compared to any qualified transformer or inductor.

Source: https://assist.dla.mil -- Downloaded: 2016-11-03T19:10Z
Check the source to verify that this is the current version before use.

Identification data (to be completed by manufacturer):

1. Name of manufacturer
2. Address of manufacturer
3. Manufacturer's part number.
4. Federal supply code assigned to manufacturer
5. Date of entries completed.

Instructions for use of this form

Enter all information, including numerical values as required by this form, using as your guide applicable MIL-T-27 scope, requirement, and methods of examination and test paragraphs. MIL-T-27, specification sheet, if any, to which the transformer or inductor can be added

MIL-T-27/_____. (enter slash number)

☐ This item cannot be added to any existing specification sheet

Type designation (see MIL-T-27, 1.2.1 thru 1.2.1 5) TF _____ (enter symbols).

Federal Stock Number (FSN) (check applicable block)

☐ Existing FSN assigned to this transformer or inductor is 5950-____-_____. (enter numerals)

☐ No FSN is presently assigned to this transformer or inductor.

Application of transformer or inductor:

1. Military equipment identification (Joint Electronics Type Designation System):

   _____ (enter identification no.)
2. Military documents (check all applicable blocks and enter information requested):

   ☐ Technical Order (T.O.) _____. (identification no.)

   ☐ Technical Manual (T.M.) _____. (identification no.)

   ☐ Military drawing _____. (identification no.)

FIGURE 17. Transformer or inductor data sheet.

Source: https://assist.dla.mil -- Downloaded: 2016-11-03T19:10Z
Check the source to verify that this is the current version before use.

In the space below, provide outline drawings in as many views as are required to show all of the principal exterior features of this transformer or inductor including case, mounting and terminal dimensions 1/ and tolerances 2/, and terminal identification (see MIL-T-27 figure 1).

1/ Dimensions shall be given in decimal fractions, accurate to three decimal places
2/ State dimensions as nominal value, with tolerances as specified in MIL-T-27, figure 1, and tables and notes thereto

Examples 1 750 $\pm^{0.000}_{0.125}$ 2.500 ±0.016

REQUIREMENTS

Case.

Material (check applicable block): ☐ Metal.

☐ Other. _____ (specify material)

Nominal weight _____ (enter value) grams, pounds. (cross out one)

Terminals.

Material _____ (specify)

Type (check applicable block)

☐ Solder terminal

☐ Screw thread

☐ Solid wire lead other than printed circuit.

☐ Insulated wire leads.

☐ Pin for printed circuits.

☐ Pin for electron tube sockets.

☐ Special _____. (specify type)

FIGURE 17. Transformer or inductor data sheet - Continued.

Source: https://assist.dla.mil -- Downloaded: 2016-11-03T19:10Z
Check the source to verify that this is the current version before use.

Solderability (see MIL-T-27, 4.8.2).

Check applicable block

☐ 4.8.2.1 ☐ 4.8.2.2

Resistance to solvents (see MIL-T-27, 4.8.3), method 215, MIL-STD-202.

Check applicable block.

☐ Applicable. ☐ Not applicable.

Thermal shock (see MIL-T-27, 4.8.4).

Check applicable block

☐ 10 cycles

☐ 25 cycles

☐ other, specify No. of cycles _____

Resistance to soldering heat (see MIL-T-27, 4.8.5).

Bath (4.8.5 1) Iron (4.8.5.2)

☐ ☐

Terminal strength (see MIL-T-27, 4.8.6), method 211, MIL-STD-202.

Check applicable blocks:

Equivalent diameter at cross section as defined in table XI of MIL-T-27

_____ inches.
(enter value)

☐ Condition A (pull), applied force (in accordance with MIL-T-27, table X)

☐ 2.0 pounds. ☐ 5.0 pounds.

☐ Condition B (bend)

☐ Condition D (twist)

☐ Condition E (torque)

☐ Screw-thread terminals.

Torque. _____ pound-inches.
(enter value)

☐ Other non-wire, rigid type terminals, if equivalent diameter is greater than 1/2 inch:

Torque: _____ ounce-inches:
(enter value)

FIGURE 17. Transformer or inductor data sheet - Continued.

Source: https://assist.dla.mil -- Downloaded: 2016-11-03T19:10Z
Check the source to verify that this is the current version before use.

Seal (see MIL-T-27, 4.8.7).

Check applicable block

Liquid	Gas	Other
☐ 4.8.7.1	☐ 4.8.7.2	☐ 4.8.7.3

Dielectric withstanding voltage test.

Check applicable blocks

☐ At atmospheric pressure (see MIL-T-27, 4.8.8.1), method 301, MIL-STD-202

Magnitude of test voltage _____ volts, rms.

Terminal identification for applicable test voltage, _____.

☐ At barometric pressure (see MIL-T-27, 4.8.8.2). In accordance with 4 8.8.1 and method 105, MIL-STD-202, test condition

_____
(specify condition letter).

Magnitude of test voltage _____ volts, rms
(enter value)

Induced voltage (see MIL-T-27, 4.8.9)

Check applicable block

☐ 4.8.9.1 ☐ 4.8.9.2

Insulation resistance (see MIL-T-27, 4.8.10), method 302, MIL-STD-202, test condition B.

Dc test potential _____ volts
(enter value)

Electrical characteristics and tolerances (see 4.8.11 to 4.8.11.20).

No load _____

Rated load _____

Dc resistance and resistive unbalance _____

Inductance and inductive unbalance _____

Harmonic distortion _____

Primary impedance _____

Frequency response _____

FIGURE 17 Transformer or inductor data sheet - Continued.

Source: https://assist.dla.mil -- Downloaded: 2016-11-03T19:10Z
Check the source to verify that this is the current version before use.

Insertion loss _____

Self-resonant frequency _____

Coupling among units (multiunit transformers and inductors) _____

Electrostatic shielding _____

Magnetic shielding _____

Center-tap balance at low levels _____

Polarity _____

Storage factor _____

Wave shape _____

Turns ratio or voltage ratio _____

Phase shift _____

Short circuit test _____

Capacitance _____

Impedance
- Source _____
- Load _____

Frequency _____

Working voltage _____

Power level _____

Primary winding
- Voltage _____
- Current _____
- VA _____
- Impedance _____

Secondary winding(s)
- Number _____
- Voltage, each _____
- Current, each _____

Pulse electrical characteristics _____

_____

Other electrical characteristics _____

_____

FIGURE 17 Transformer or inductor data sheet - Continued.

Source: https://assist.dla.mil -- Downloaded: 2016-11-03T19:10Z
Check the source to verify that this is the current version before use.

Temperature rise (see MIL-T-27, 4.8.12).

Specify values if temperature rise test is applicable. I II III

Temperature rise _____ degrees C. Methods ☐ ☐ ☐

Ambient temperature _____ degrees C.

Maximum operating temperature _____ degrees C

☐ Not applicable (see 4.8.12)

Corona discharge (see MIL-T-27, 4.8 13).

Check applicable block

Required test circuit of figure 10

☐ 1 ☐ 2 ☐ 3

Salt spray (see MIL-T-27, 4 8.14)

Check block if salt spray is applicable. ☐

Vibration (see MIL-T-27, 4 8 15)

Check applicable block

☐ Low frequency (see MIL-T-27, 4.8.15.1), method 201, MIL-STD-202.

☐ High frequency (see MIL-T-27, 4.8.15.2), method 204, MIL-STD-202.

Shock (see MIL-T-27, 4.8.16).

Check applicable block

☐ Specified pulse (see MIL-T-27, 4.8.16.1), method 213, MIL-STD-202, test condition I ☐ or specify condition letter___

☐ High impact (see MIL-T-27, 4.8 16 2), method 207, MIL-STD-202

Moisture resistance (see MIL-T-27, 4.8.19), method 106, MIL-STD-202.

Check applicable block

Polarizing voltage

☐ Applicable ☐ Not applicable.

Overload (see MIL-T-27, 4.8.20)

Check applicable block

☐ Applicable. ☐ Not applicable.

FIGURE 17 Transformer or inductor data sheet - Continued.

Source: https://assist.dla.mil -- Downloaded: 2016-11-03T19:10Z
Check the source to verify that this is the current version before use.

Flammability (see MIL-T-27, 4.8.21), method 111, MIL-STD-202.

Check applicable block

☐ Applicable. ☐ Not applicable.

Life (see MIL-T-27, 4.8.22).

Check applicable block

☐ Loaded ☐ Not loaded

Fungus (see MIL-T-27, 4.8.23), method 508, MIL-STD-810.

Check applicable block

☐ Applicable ☐ Certification.

FIGURE 17. Transformer or inductor data sheet - Continued.

Source: https://assist.dla.mil -- Downloaded: 2016-11-03T19:10Z
Check the source to verify that this is the current version before use.

DATA SHEET FOR POWER TRANSFORMER TO MIL-T-27

ELECTRICAL RATING

Primary (1-2): _____VA, _____Vrms, _____Hz
Secondary (3-4): _____Vrms, _____Arms
(5-6) _____Vrms, _____Arms
(etc)
Duty cycle:

Working voltage: (Primary) (Secondary)
Altitude:
Operating temperature range:

PHYSICAL CHARACTERISTICS

Case size:
Weight: (In grams, oz(s) or pound(s))
Terminal type:
Terminal height:

ELECTRICAL PROPERTIES

Dielectric withstanding voltage (each winding):
At sea level - _____volts rms
At reduced barometric pressure - _____volts rms
No load (see 4.8.11.1): With (primary voltage) volts and (frequency)Hz in (1-2):
Current in (1-2): _____ma max
Power in (1-2): _____watts max
Voltage across (3-4): _____volts ± __%
Voltage across (5-6): _____volts ± __%
Voltage across (etc): _____volts ± __%
Rated load (see 4.8.11.2): With primary volts & Hz across (1-2):
Voltage across (3-4): _____volts ± __%
Voltage across (5-6): _____volts ± __%
Voltage across (etc): _____volts ± __%
Electrostatic shielding: Voltage ratio: __ to __ at _____kHz.
DC resistance: (1-2)
(3-4)
(5-6)
Polarity: Additive, with terminals __ and __ connected.
Temperature rise: ____°C with _____volts rms, _____Hz
across (1-2) at an ambient temperature of ____°C.

(In the space below, provide circuit diagram)

Source: https://assist.dla.mil -- Downloaded: 2016-11-03T19:10Z
Check the source to verify that this is the current version before use.

DATA SHEET FOR AUDIO TRANSFORMER TO MIL-T-27

ELECTRICAL RATING

Source impedance (1-2): _____ ohms
Load impedance (3-4): _____ ohms
(5-6): _____ ohms
(etc): _____ ohms
Primary current: _____ amp dc through (1-2)
Frequency range: _____ to _____ Hz, ± _____ db
Power level: _____ watts max, _____ watts min.
Duty cycle: _____
Working voltage: _____ (1-2), _____ (3-4) _____ (etc)
Altitude: _____
Operating temperature: _____ °C max.

PHYSICAL CHARACTERISTICS

Case size: _____
Weight: _____ (grams, ounces, or pounds)
Terminal type: _____
Terminal height: _____

ELECTRICAL PROPERTIES

Dielectric withstanding voltage (each winding):
At sea level - _____ volts rms
At reduced barometric pressure - _____ volts rms

No load (center-tap voltage unbalance only): With _____ volts, _____ Hz, and _____ amp dc applied to (1-2); Unbalance (3-4) and (etc): _____ %, max.

Harmonic distortion: Total harmonic content of output: _____ % with _____ volts, _____ Hz and _____ amp dc applied to (1-2), max.

Primary impedance: (1-2) _____ ohms with approx _____ volts, _____ Hz and _____ amp dc applied to (1-2) and _____ ohms across (3-4) (etc)

Frequency response: Z_s = _____ ohms (1-2); Z_l = _____ ohms (3-4) (etc);
E_s = _____ volts; reference frequency = _____ Hz;
frequency range is _____ to _____ Hz ± _____ dB

Insertion loss: _____ dB with _____ volts, _____ Hz across (1-2), max.

Resonance: Second resonant frequency - _____ Hz min.

Polarity: Additive, with terminals (?-?) and (?-?), and (etc) connected.

Temperature rise: _____ °C with _____ volts, _____ Hz and _____ amp dc applied to (1-2) and _____ ohms (ct) across (3-4) at an ambient temperature of _____ °C max.

Electrostatic shielding: Voltage ratio: _____ to _____ at _____ kHz.

(In the space below, provide circuit diagram)

Source: https://assist.dla.mil -- Downloaded: 2016-11-03T19:10Z
Check the source to verify that this is the current version before use.

DATA SHEET FOR POWER INDUCTOR TO MIL-T-27

ELECTRICAL RATING

Inductance: _____ h min
Current: _____ amp. dc
Voltage: _____ volts rms
Frequency: _____ Hz
DC resistance: _____ ohms max.
Duty cycle: _____
Working voltage: _____ volts max,
Altitude: _____ feet max.
Operating temperature: _____ °C, max.

PHYSICAL CHARACTERISTICS

Case size: _____
Weight: _____ pounds max.
Terminal type: _____
Terminal height: _____ in. max.

ELECTRICAL TEST PROPERTIES

Dielectric withstanding voltage:
At sea level - _____ volts rms
At reduced barometric pressure - _____ volts rms
Inductance: With ____ volts rms, ____ Hz, and _____ amp dc
applied to (1-2): _____ henries min.
DC resistance: (1-2) _____ ohms max.
Temperature rise: ____ °C with _____ volts rms, _____ Hz,
_____ amp dc applied to (1-2) at an ambient temperature
of _____ °C max.

(In the space below, provide circuit diagram)

Source: https://assist.dla.mil -- Downloaded: 2016-11-03T19:10Z
Check the source to verify that this is the current version before use.

DATA SHEET FOR AUDIO INDUCTOR TO MIL-T-27

ELECTRICAL RATING

Inductance: _____ mH ± _____ %
Voltage: _____ V or mV
Self resonant frequency (min) _____ kHz
D.C. resistance (max) _____
Temperature coefficient _____ PPM/°C (- ___ °C to ___ °C), (if applicable)
Quality factor (min) _____ @ _____ kHz (if applicable)
Power level (max) _____ watts

PHYSICAL CHARACTERISTICS

Case size: _____
Weight: _____ (grams, ounces, or pounds)
Terminals _____ (size and material)
Terminal strength _____
Duty cycle _____

Altitude _____
Operating temperature (max) _____ °C

ELECTRICAL PROPERTIES

Dielectric withstanding voltage:
At sea level - _____ volts, rms
At reduced barometric pressure _____ volts, rms
Inductance: With _____ volts, _____ kHz applied to (1-2): _____ mh ± _____ %
DC resistance: (1-2) _____ ohms, max
Temperature rise: _____ °C with _____ volts, _____ kHz applied to (1-2) at an ambient temperature of _____ °C.

(In the space below, provide circuit diagram)

Source: https://assist.dla.mil -- Downloaded: 2016-11-03T19:10Z
Check the source to verify that this is the current version before use.

Characteristic	Characteristics of transformers and inductors being submitted for qualification based on similarity	Characteristics of transformers and inductors having qualification
Identification data	Name of manufacturer: Address of manufacturer: Manufacturer's part number Code assigned to manufacturer.	Name of manufacturer Address of manufacturer Manufacturer's part number Test or qualification reference Code assigned to manufacturer.
Operating temperature	85°C ☐ 155°C ☐ 105°C ☐ 170°C ☐ 130°C ☐ >170°C ☐	85°C ☐ 155°C ☐ 105°C ☐ 170°C ☐ 130°C ☐ > 170°C ☐
Ambient temperature (operating temperature-temperature rise)		
External mounting Internal mounting Nominal wall thickness Envelope dimensions Case volume Grade	Grade 4 ☐ Grade 6 ☐ Grade 5 ☐	Grade 4 ☐ Grade 6 ☐ Grade 5 ☐
Wire size Coating material		
Case material	Metal ☐ Other (specify) ☐	Metal ☐ Other (specify) ☐
Case finish	Light-gray, semigloss ☐	Light-gray, semigloss ☐
Operating voltage		
Potting Insulation Impregnation Filling		
Altitude	10,000 ft ☐ 50,000 ft ☐	10,000 ft ☐ 50,000 ft ☐
Terminal construction, material and finish (including insulating and gasketing parts)		

FIGURE 18. Transformer and inductor similarity comparison sheet.

Source: https://assist.dla.mil -- Downloaded: 2016-11-03T19:10Z
Check the source to verify that this is the current version before use.

INDEX

	Paragraph
Airborne application notes	6.9
Ambient temperature increase note	6.11
Applicable documents	2
Atmospheric pressure (dielectric withstanding voltage)	4.8.8.1
Barometric pressure (dielectric withstanding voltage)	4.8.8.2
Bend or twist test	4.8.6.2
Center-tap balance at low levels	4.8.11.13
Classification	1.2
Type designation	1.2.1
Classification of inspections	4.2
Core and coil mounting	3.5.5
Corona discharge	3.17, 4.8.13
Coupling among units	4.8.11.10
DC resistance and resistive unbalance	4.8.11.3
Design and construction:	3.5
Mounting and terminal screws and mounting inserts	3.5.1
Terminals	3.5.2
Mounting studs	3.5.3
Internal wire leads	3.5.4
Core and coil mounting	3.5.5
Paint color	3.5.6
Potting, filling, or encapsulating material	3.5.7
Detail requirements for individual units	3.1
Dielectric withstanding voltage.	3.12, 4.8.8, 6.5
At atmospheric pressure	4.8.8.1
At barometric pressure	4.8.8.2
At reduced voltage	4.8.8.3
Reduction of testing note	6.13
Electrical characteristics	3.15, 4.8.11, 6.14.11
Test circuits for	6.12
Eletrostatic shielding	4.8.11.11
Flammability	3.26, 4.8.21
Frequency response	4.8.11.7
Fungus	3.28, 4.8.23
General applications for equipment designers notes	6.14
Harmonic distortion	4.8.11.5
Immersion	3.22, 4.8.18
Induced voltage	3.13, 4.8.9, 6.7
Inductance and inductive unbalance	4.8.11.4
Insertion loss	4.8.11.8
Inspection conditions	4.4
Test frequency	4.4.1
Test voltage	4.4.2
Inspection lot	4.7.1.1
Inspection of preparation for delivery	4.7.2
Inspection of product for delivery	4.7.1
Insulating materials.	3.4.4
Laminated phenolics	3.4.4.1, 6.9.1
Molded phenolic or melamine	3.4.4.2
Ceramic	3.4.4.3
Insulation resistance	3.14, 4.8.10
Internal wire leads	3.5.4
Life	3.27, 4.8.22

Source: https://assist.dla.mil -- Downloaded: 2016-11-03T19:10Z
Check the source to verify that this is the current version before use.

INDEX

	Paragraph
Magnetic shielding	4.8.11.12, 6.8
Marking:	3.29
Families	3.29.1 to 3.29.5, incl.
Terminal identification	3.29.6
Materials	3.4
Substitution of	3.4.1
Flammable	3.4.2
Corrosive	3.4.3
Insulating	3.4.4
Wire	3.4.5
Solder and soldering flux	3.4.6
Screws, nuts, and washers	3.4.7
Materials inspection	4.3
Moisture resistance	3.23, 4.8.19
Mounting and terminal screws and mounting inserts	3.5.1
Mounting studs	3.5.3
No load	4.8.11.1
Ordering data notes	6.1
Overload	3.24, 4.8.20
Paint color	3.5.6
Phase shift	4.8.11.18
Polarity	4.8.11.14
Potting, filling, or encapsulating material	3.5.7
Preparation for delivery	5
Preservation and packaging	5.1
Packing	5.2
Marking	5.3
General	5.4
First article	3.3
Information to be furnished with first article sample	3.3.1
Inspection	4.6, 6.3
Primary impedance	4.8.11.6
Pull test	4.8.6.1
Qualification:	3.2, 6.2
Based on complete testing	4.5.1
Based on similarity	4.5.2
Retention of	4.5.3
Inspection	4.5
Procedures for (appendix)	10, 30
Quality conformance inspection	4.7
Rated load	4.8.11.2
Reduced voltage - dielectric withstanding voltage	4.8.8.3
Reduction of dielectric withstanding voltage testing	6.13
Resistance to soldering heat	3.9, 4.8.5
Resistance to solvents	3.7, 4.8.3
Resonant frequency	4.8.11.9
Responsibility for inspection	4.1
Test equipment and inspection facilities	4.1.1
Retention of qualification	4.5.3
Salt spray	3.18, 4.8.14
Screws, nuts, and washers	3.4.7, 3.5.1
Seal	3.11, 4.8.7
Shock	3.20, 4.8.16
Short-circuit test	4.8.11.19
Solder and soldering flux	3.4.6
Solderability	3.6, 4.8.2
Specifications and other publications	2.1, 2.2
Storage factor	4.8.11.15

Source: https://assist.dla.mil -- Downloaded: 2016-11-03T19:10Z
Check the source to verify that this is the current version before use.

INDEX

	Paragraph
Temperature rise	3.16, 4.8.12
Terminal strength	3.10, 4.8.6
Pull	4.8.6.1
Twist or bend	4.8.6.2
Torque	4.8.6.3
Terminals	3.5.2
Solder	3.5.2.1
Printed circuit and pin-type	3.5.2.2
Screw	3.5.2.4
Test circuits for electrical characteristics	6.12
Thermal shock	3.8, 4.8.4
Torque test	4.8.6.3
Turns ratio or voltage ratio	4.8.11.17
Twist or bend test	4.8.6.2
Type designation	1.2.1
Component	1.2.1.1
Grade	1.2.1.2
Class	1.2.1.3
Family	1.2.1.4
Envelope and mounting dimensions	1.2.1.5, 6.5
Identification number	1.2.1.6
Vibration:	3.19, 4.8.15
Low frequency	4.8.15.1
High frequency	4.8.15.2
Visual and mechanical examination	4.8.1
External	4.8.1.1
Internal	4.8.1.2
Post-test	4.8.1.1.1
Wave shape	4.8.11.16
Winding continuity	3.21, 4.8.17
Wire:	3.4.5
Magnet	3.4.5.1
Insulated	3.4.5.2
Workmanship	3.30

Source: https://assist.dla.mil -- Downloaded: 2016-11-03T19:10Z
Check the source to verify that this is the current version before use.

INSTRUCTIONS: In a continuing effort to make our standardization documents better, the DoD provides this form for use in submitting comments and suggestions for improvements. All users of military standardization documents are invited to provide suggestions. This form may be detached, folded along the lines indicated, taped along the loose edge *(DO NOT STAPLE)*, and mailed. In block 5, be as specific as possible about particular problem areas such as wording which required interpretation, was too rigid, restrictive, loose, ambiguous, or was incompatible, and give proposed wording changes which would alleviate the problems. Enter in block 6 any remarks not related to a specific paragraph of the document. If block 7 is filled out, an acknowledgement will be mailed to you within 30 days to let you know that your comments were received and are being considered.

NOTE This form may not be used to request copies of documents, nor to request waivers, deviations, or clarification of specification requirements on current contracts. Comments submitted on this form do not constitute or imply authorization to waive any portion of the referenced document(s) or to amend contractual requirements.

(Fold along this line)

(Fold along this line)

DEPARTMENT OF THE ARMY

NO POSTAGE NECESSARY IF MAILED IN THE UNITED STATES

OFFICIAL BUSINESS
PENALTY FOR PRIVATE USE $300

BUSINESS REPLY MAIL
FIRST CLASS PERMIT NO 12062 WASHINGTON D C

POSTAGE WILL BE PAID BY THE DEPARTMENT OF THE ARMY

US Army Electronics Research and Developement
Command

ATTN: DELET-R-S
Fort Monmouth, NJ 07703

Source: https://assist.dla.mil -- Downloaded: 2016-11-03T19:10Z
Check the source to verify that this is the current version before use.

STANDARDIZATION DOCUMENT IMPROVEMENT PROPOSAL

(See Instructions – Reverse Side)

1. DOCUMENT NUMBER	2. DOCUMENT TITLE

3a. NAME OF SUBMITTING ORGANIZATION	4. TYPE OF ORGANIZATION *(Mark one)*
	☐ VENDOR
	☐ USER
b. ADDRESS *(Street, City, State, ZIP Code)*	☐ MANUFACTURER
	☐ OTHER *(Specify)* _____

5. PROBLEM AREAS

a. Paragraph Number and Wording

b. Recommended Wording

c. Reason/Rationale for Recommendation

6. REMARKS

7a. NAME OF SUBMITTER *(Last, First, MI)* – Optional	b. WORK TELEPHONE NUMBER *(Include Area Code)* – Optional
c. MAILING ADDRESS *(Street, City, State, ZIP Code)* – Optional	8. DATE OF SUBMISSION *(YYMMDD)*

DD FORM 1426 PREVIOUS EDITION IS OBSOLETE.

Source: https://assist.dla.mil -- Downloaded: 2016-11-03T19:10Z
Check the source to verify that this is the current version before use.