The document and process conversion measures necessary to comply with this revision shall be completed by 01 September 2009.

INCH–POUND

MIL–P–50884E
24 November 2008
SUPERSEDING
MIL–P–50884D
w/AMENDMENT 2
29 May 2006
(See 6.6)

# MILITARY SPECIFICATION

# PRINTED WIRING BOARD, FLEXIBLE OR RIGID–FLEX, GENERAL SPECIFICATION FOR

Inactive for new design after 28 February 1999.
For new design use MIL–PRF–31032.

Comments, suggestions or questions on this document should be addressed to: Defense Supply Center, Columbus, ATTN: DSCC–VAC, P.O. Box 3990, Columbus, OH 43218–3990 or sent by electronic mail (e-mail) to 5998.Documents@dscc.dla.mil. Since contact information can change, you may want to verify the currency of address information using the ASSIST Online database at Universal Resource Locator (URL) http://assist.daps.dla.mil.

AMSC N/A

FSC 5998

Source: https://assist.dla.mil -- Downloaded: 2016-11-03T17:14Z
Check the source to verify that this is the current version before use.

This page intentionally left blank.



Source: https://assist.dla.mil -- Downloaded: 2016-11-03T17:14Z
Check the source to verify that this is the current version before use.

CONTENTS

PARAGRAPH PAGE

1. SCOPE ..... 1
1.1 Scope ..... 1
1.2 Classification ..... 1
1.2.1 Printed wiring board type ..... 1
1.2.2 Installation use ..... 1
1.2.3 Rework capability ..... 1
1.2.4 Flexible base material ..... 1
1.2.5 Rigid base material ..... 1
1.3 Description of this specification ..... 2
2. APPLICABLE DOCUMENTS ..... 2
2.1 General ..... 2
2.2 Non–Government publications ..... 2
2.3 Order of precedence ..... 2
3. REQUIREMENTS ..... 2
3.1 General requirements ..... 2
3.1.1 Master drawing ..... 2
3.1.2 Conflicting requirements ..... 3
3.1.3 Terms and definitions ..... 3
3.2 Qualification ..... 3
3.2.1 QPL ..... 3
3.2.2 QPL/QML ..... 3
3.3 Product assurance requirements ..... 3
3.3.1 QPL product assurance ..... 3
3.3.2 QPL/QML product assurance ..... 3
3.4 Letters of interpretation and policy ..... 3
3.5 Recycled, recovered, or environmentally preferable materials ..... 4
3.6 Certification of conformance and acquisition traceability ..... 4
3.7 Qualifying activity on–site audit ..... 4
3.8 Workmanship ..... 4
4. VERIFICATION ..... 4
4.1 Classification of inspections ..... 4
4.2 Printed wiring board performance verification ..... 5
4.2.1 QPL ..... 5
4.2.2 QPL/QML ..... 5
4.3 Qualification inspection ..... 5
4.3.1 QPL ..... 5
4.3.2 QPL/QML ..... 5
5. PACKAGING ..... 5
5.1 Packaging ..... 5
6. NOTES ..... 5
6.1 Intended use ..... 5
6.2 Acquisition requirements ..... 5
6.3 Qualification ..... 6
6.3.1 Transference of qualification ..... 6
6.3.2 Retention of qualification ..... 6
6.3.2.1 Discussion ..... 6
6.3.3 'Provisions Governing Qualification' ..... 6
6.3.4 QPL requalification ..... 6
6.4 Terms and definitions ..... 6
6.4.1 Acquiring activity ..... 6
6.4.2 Design standard ..... 6



Source: https://assist.dla.mil -- Downloaded: 2016-11-03T17:14Z
Check the source to verify that this is the current version before use.

CONTENTS

PARAGRAPH PAGE

6.4.3 Printed wiring board type ....7
6.4.3.1 Type 1 ....7
6.4.3.2 Type 2 ....7
6.4.3.3 Type 3 ....7
6.4.3.4 Type 4 ....7
6.4.3.5 Type 5 ....7
6.4.4 Product assurance ....7
6.4.4.1 QML....7
6.4.4.2 QPL ....7
6.4.4.3 QPL/QML ....7
6.4.5 Commercial and Government Entity (CAGE) code ....7
6.5 Compliant printed wiring boards ....7
6.6 Supersession....8
6.6.1 Superseded types and classes ....8
6.6.2 Design, construction and verification....8
6.6.3 Reference to superseded specifications ....8
6.7 Design standard ....8
6.8 Environmentally preferable material ....8
6.9 Subject term (key word) listing....8
6.10 Changes from previous issue ....8

APPENDIX A Product Assurance Requirements for Qualified Products List Programs....9
A.1. SCOPE ....9
A.1.1 Scope ....9
A.2. APPLICABLE DOCUMENTS....9
A.2.1 General ....9
A.2.2 Non–Government publications ....9
A.2.3 Order of precedence ....9
A.3. REQUIREMENTS....10
A.3.1 General ....10
A.3.1.1 Master drawing ....10
A.3.2 Qualification ....10
A.3.2.1 QPL product assurance ....10
A.3.2.1.1 Product assurance procedures ....10
A.3.2.1.2 Facility changes ....11
A.3.3 Design ....11
A.3.3.1 Test coupons ....11
A.3.4 Materials....11
A.3.4.1 Pure tin ....11
A.3.4.2 Recycled, recovered, or environmentally preferable materials ....11
A.3.5 External visual and dimensional requirements ....12
A.3.5.1 Base material....12
A.3.5.1.1 Edges of base materials....12
A.3.5.1.1.1 Edges of flexible sections ....12
A.3.5.1.1.2 Edges of rigid sections ....12
A.3.5.1.1.3 Edges between flexible and rigid sections ....12
A.3.5.1.2 Surface imperfections ....12
A.3.5.1.3 Subsurface imperfections....13
A.3.5.1.3.1 Foreign inclusions....13
A.3.5.1.3.2 Subsurface spots....13
A.3.5.1.3.3 Adhesive voids ....13
A.3.5.1.3.4 Measling and crazing....13



Source: https://assist.dla.mil -- Downloaded: 2016-11-03T17:14Z
Check the source to verify that this is the current version before use.

CONTENTS

PARAGRAPH PAGE

A.3.5.2 Conductor pattern ....14
A.3.5.2.1 Annular ring, external ....14
A.3.5.2.2 Conductor spacing ....14
A.3.5.2.3 Conductor width ....14
A.3.5.2.4 Conductor pattern imperfections ....14
A.3.5.2.4.1 Cuts and scratches ....14
A.3.5.2.4.2 Dents ....14
A.3.5.2.4.3 Pinholes ....14
A.3.5.2.4.4 Pits ....14
A.3.5.2.4.5 Superfluous metal ....14
A.3.5.2.5 Conductor finish ....15
A.3.5.2.5.1 Coverage ....15
A.3.5.2.5.1.1 Conductor finish plating and coating voids in plated-through holes ....15
A.3.5.2.5.1.2 Edge board contacts ....15
A.3.5.2.5.1.3 Plating junctions ....15
A.3.5.2.5.1.4 Solder mask ....15
A.3.5.2.5.2 Whiskers ....15
A.3.5.2.6 Component mounting ....16
A.3.5.2.6.1 Rectangular surface mount lands ....16
A.3.5.2.6.2 Round surface mount lands (BGA pads) ....16
A.3.5.2.6.3 Wire bond pads ....16
A.3.5.3 Coverlayer ....16
A.3.5.3.1 Coverage ....16
A.3.5.3.2 Delamination ....17
A.3.5.3.2.1 Wrinkles or creases ....17
A.3.5.3.2.2 Continuous flex designs ....17
A.3.5.3.3 Cover coat cure ....17
A.3.5.3.4 Registration ....17
A.3.5.3.5 Thickness ....18
A.3.5.3.6 Wicking of plated metals or solder ....18
A.3.5.4 Dimensions of features ....18
A.3.5.4.1 Hole pattern accuracy ....18
A.3.5.4.2 Ball grid array (BGA) lands ....18
A.3.5.5 Lifted lands and bonding of conductor to base material ....18
A.3.5.6 Registration, external (method I) ....18
A.3.5.7 Solder mask ....19
A.3.5.7.1 Coverage ....19
A.3.5.7.2 Discoloration ....19
A.3.5.7.3 Registration ....19
A.3.5.7.4 Solder mask cure ....20
A.3.5.7.5 Thickness ....20
A.3.5.8 Stiffeners ....20
A.3.5.8.1 Bonding ....20
A.3.5.8.2 Foreign material between the stiffener and printed wiring board surface ....20
A.3.5.8.3 Stiffener access hole registration ....20
A.3.5.9 Wicking of metallic conductor surface finish materials ....20
A.3.6 Plated hole structural requirements ....20
A.3.6.1 Base material ....20
A.3.6.1.1 Adhesive voids ....20
A.3.6.1.1.1 Non-stressed specimens ....20
A.3.6.1.1.2 Stressed specimens ....21
A.3.6.1.2 Base material cracks and voids ....21
A.3.6.1.2.1 Non-stressed specimens ....21
A.3.6.1.2.2 Stressed specimens ....21



Source: https://assist.dla.mil -- Downloaded: 2016-11-03T17:14Z
Check the source to verify that this is the current version before use.

CONTENTS

PARAGRAPH PAGE

A.3.6.1.3 Coverlayer thickness ....21
A.3.6.1.4 Delamination ....21
A.3.6.1.5 Dielectric layer thickness ....21
A.3.6.1.6 Metal plane hole fill insulation material ....21
A.3.6.1.7 Hole wall to dielectric separation ....21
A.3.6.1.7.1 Non-stressed specimens ....21
A.3.6.1.7.2 Stressed specimens ....21
A.3.6.1.8 Via fill of blind and buried vias ....21
A.3.6.2 Conductor finish ....22
A.3.6.2.1 Dewetting ....22
A.3.6.2.2 Nonwetting ....22
A.3.6.2.3 Outgrowth and overhang ....22
A.3.6.2.4 Protective finishes for internal metal cores or metal backing ....22
A.3.6.2.5 Thickness ....22
A.3.6.3 Conductor thickness ....22
A.3.6.3.1 Conductors with copper plating (after processing) ....22
A.3.6.3.2 Conductors without copper plating (after processing) ....24
A.3.6.4 Conductor width ....24
A.3.6.4.1 Annular ring, internal ....24
A.3.6.4.2 Undercutting ....24
A.3.6.5 Hole preparation prior to metallization ....24
A.3.6.5.1 Desmear (hole cleaning) ....24
A.3.6.5.2 Etchback ....25
A.3.6.6 Lifted lands ....25
A.3.6.6.1 Non-stressed specimens ....25
A.3.6.6.2 Stressed specimens ....25
A.3.6.7 Plated-through hole plating ....25
A.3.6.7.1 Copper plating thickness ....25
A.3.6.7.2 Copper plating defects ....26
A.3.6.7.3 Copper plating voids ....26
A.3.6.7.4 Conductive interface separations ....26
A.3.6.7.4.1 Copper to copper interfaces ....26
A.3.6.7.4.2 Dissimilar metal interfaces ....26
A.3.6.7.5 Wicking of copper plating ....26
A.3.6.7.6 Via cap plating ....27
A.3.6.8 Hole wall deficiencies ....27
A.3.6.9 Metallic cracks ....27
A.3.6.10 Nail-heading ....27
A.3.7 Inspection requirements ....27
A.3.7.1 External visual and dimensional acceptability ....27
A.3.7.2 Destructive physical analysis by metallographic evaluation of printed wiring board test specimens ....27
A.3.7.2.1 Non-stressed specimens ....27
A.3.7.2.2 Registration, internal ....27
A.3.7.2.2.1 By microsection (method II) ....27
A.3.7.2.2.2 By registration test coupons (method III) ....27
A.3.7.3 Chemical requirements ....28
A.3.7.3.1 Ionic contamination ....28
A.3.7.3.1.1 Prior to the application of solder mask ....28
A.3.7.3.1.2 Completed inner layer prior to lamination ....28
A.3.7.3.1.3 Completed printed wiring boards ....28
A.3.7.3.2 Resistance to solvents ....28



Source: https://assist.dla.mil -- Downloaded: 2016-11-03T17:14Z
Check the source to verify that this is the current version before use.

CONTENTS

PARAGRAPH PAGE

A.3.7.4 Physical requirements ....28
A.3.7.4.1 Adhesion, coverlayer ....28
A.3.7.4.2 Adhesion, legend and marking ....28
A.3.7.4.3 Adhesion, plating ....28
A.3.7.4.4 Adhesion, solder mask ....28
A.3.7.4.5 Bow and twist ....29
A.3.7.4.6 Flexibility endurance ....29
A.3.7.4.6.1 Qualification and periodic testing ....29
A.3.7.4.6.2 User specified ....29
A.3.7.4.7 Folding flexibility ....29
A.3.7.4.7.1 Qualification and periodic testing ....29
A.3.7.4.7.2 User specified ....29
A.3.7.4.8 Rework simulation ....30
A.3.7.4.8.1 Grade R, types 1 and 5 with unsupported holes ....30
A.3.7.4.8.2 Grade R, types 2, 3 and 4 with plated-through holes ....30
A.3.7.4.8.3 Grade U ....30
A.3.7.4.9 Solderability ....30
A.3.7.4.9.1 Hole (plated-through hole) solderability ....30
A.3.7.4.9.2 Surface (or surface mount land) solderability ....30
A.3.7.4.10 Solder mask cure ....30
A.3.7.4.11 Surface peel strength ....30
A.3.7.5 Electrical requirements ....31
A.3.7.5.1 Circuit continuity and shorts ....31
A.3.7.5.1.1 Circuit continuity ....31
A.3.7.5.1.2 Circuit shorts ....31
A.3.7.5.2 Circuit or plated-through hole short to metal core substrate ....31
A.3.7.5.3 Dielectric withstanding voltage ....31
A.3.7.5.4 Impedance testing ....31
A.3.7.6 Environmental requirements ....31
A.3.7.6.1 Moisture and insulation resistance ....31
A.3.7.6.2 Resistance to soldering heat ....31
A.3.7.6.2.1 Solder float thermal stress ....31
A.3.7.6.2.1.1 Types 1 and 5 ....31
A.3.7.6.2.1.2 Types 2, 3 and 4 ....31
A.3.7.6.3 Thermal shock ....32
A.3.8 Marking ....32
A.3.8.1 Product identification and test vehicle traceability codes ....32
A.3.8.2 Legend ....32
A.3.8.3 Methods of producing legend and marking ....32
A.3.8.4 Marking legibility ....32
A.3.8.5 Lot date code ....32
A.3.9 Traceability ....33
A.3.9.1 Quality–conformance test circuitry, test coupons, and microsection mounts ....33
A.3.9.2 Printed board materials ....33
A.3.9.3 Serialization ....33
A.3.9.4 Quality records ....33
A.3.10 Repair ....33
A.3.11 Recycled, recovered, or environmentally preferable materials ....33
A.3.12 Workmanship ....33
A.4. VERIFICATION ....34
A.4.1 Classification of inspections ....34
A.4.2 Test and measuring equipment ....34
A.4.3 Inspection conditions ....34
A.4.4 Printed wiring board performance verification ....34



Source: https://assist.dla.mil -- Downloaded: 2016-11-03T17:14Z
Check the source to verify that this is the current version before use.

CONTENTS

PARAGRAPH PAGE

A.4.5 Qualification inspection ....34
A.4.5.1 Qualification eligibility ....34
A.4.5.2 Qualification test specimens ....34
A.4.5.2.1 Printed wiring board type ....35
A.4.5.2.2 Installation use ....35
A.4.5.2.3 Conductor surface finish ....35
A.4.5.2.4 Foil lamination ....35
A.4.5.2.5 Solder mask ....35
A.4.5.2.6 Rework capability ....35
A.4.5.3 Qualification test specimen sample size ....35
A.4.5.3.1 Printed wiring board type ....36
A.4.5.3.1.1 In–plant etchback capability ....36
A.4.5.3.1.2 Contract services etchback ....36
A.4.5.3.2 Installation use ....36
A.4.5.3.3 Conductor surface finish ....36
A.4.5.3.4 Foil lamination ....36
A.4.5.3.5 Solder mask ....36
A.4.5.4 Inspection routines ....36
A.4.5.4.1 Manufacturer test routine (MTR) ....37
A.4.5.4.1.1 Printed wiring board type ....37
A.4.5.4.1.2 Installation use ....37
A.4.5.4.1.3 Conductor surface finish ....37
A.4.5.4.1.4 Foil lamination ....37
A.4.5.4.1.5 Solder mask ....37
A.4.5.4.1.6 Disposition of sample units ....37
A.4.5.4.2 Certified suitable laboratory test routine (CTR) ....37
A.4.5.4.2.1 Printed wiring board type ....37
A.4.5.4.2.2 Installation use ....37
A.4.5.4.2.3 Conductor surface finish ....37
A.4.5.4.2.4 Foil lamination ....37
A.4.5.4.2.5 Solder mask ....37
A.4.5.4.3 Contract services ....38
A.4.5.4.4 Qualification rejection ....38
A.4.5.5 Extent of qualification ....38
A.4.5.5.1 Printed wiring board type ....38
A.4.5.5.2 Installation use ....38
A.4.5.5.3 Rework capability ....38
A.4.5.5.4 Materials ....41
A.4.5.5.4.1 Base material types ....41
A.4.5.5.4.1.1 Flexible base material ....41
A.4.5.5.4.1.2 Rigid base material ....41
A.4.5.5.4.2 Conductor surface finish ....41
A.4.5.5.4.3 Solder mask ....41
A.4.5.5.4.4 Stiffeners ....41
A.4.5.5.5 Processes ....41
A.4.5.5.5.1 Etchback ....41
A.4.5.5.5.2 Foil lamination ....41
A.4.5.5.5.3 Mass lamination ....41
A.4.5.5.6 Process changes ....41
A.4.5.6 Retention of qualification ....42
A.4.5.6.1 Failure to submit retention data ....42
A.4.5.6.2 Non-production during reporting period ....42
A.4.5.6.3 Facility changes ....42
A.4.5.7 Requalification ....42



Source: https://assist.dla.mil -- Downloaded: 2016-11-03T17:14Z
Check the source to verify that this is the current version before use.

CONTENTS

PARAGRAPH PAGE

A.4.6 Inspection of product for delivery ....43
A.4.6.1 In–process inspection ....43
A.4.6.1.1 Inspection lot ....43
A.4.6.1.1.1 Subgroup 1 ....43
A.4.6.1.1.2 Subgroup 2 ....43
A.4.6.1.2 Sample size ....43
A.4.6.1.3 Rejected lots ....43
A.4.6.2 Group A inspection ....44
A.4.6.2.1 Inspection lot ....44
A.4.6.2.2 Sampling procedures ....44
A.4.6.2.3 Rejected lots ....45
A.4.6.2.4 Disposition of sample units ....45
A.4.7 Periodic conformance inspection ....47
A.4.7.1 Group B inspection ....47
A.4.7.1.1 Inspection lot ....47
A.4.7.1.2 Sampling procedures ....47
A.4.7.1.2.1 Sample unit selection ....47
A.4.7.1.3 Frequency ....48
A.4.7.1.4 Failures ....48
A.4.7.1.4.1 Corrective actions ....48
A.4.7.1.4.2 Noncompliance ....48
A.4.7.1.4.3 Reinstitution of group A inspection ....48
A.4.7.1.5 Disposition of sample units ....48
A.4.7.2 Group C inspection ....49
A.4.7.2.1 Inspection lot ....49
A.4.7.2.2 Sampling procedures ....49
A.4.7.2.2.1 Sample unit selection ....49
A.4.7.2.3 Frequency ....49
A.4.7.2.4 Noncompliance ....50
A.4.7.2.5 Disposition of sample units ....50
A.4.8 Methods of inspection ....50
A.4.8.1 Visual and dimensional inspection ....50
A.4.8.1.1 Annular ring, external ....51
A.4.8.1.2 Overall printed wiring board thickness ....51
A.4.8.1.2.1 With edge-board contacts ....51
A.4.8.1.2.2 Without edge board contacts ....51
A.4.8.1.3 Registration, external (method I) ....51
A.4.8.1.4 Solder mask thickness ....51
A.4.8.1.5 Product identification (marking and traceability) ....51
A.4.8.1.6 Alternate plating and coating measurement techniques ....51
A.4.8.1.7 Wire bond pad surface roughness ....51
A.4.8.1.8 Materials inspection ....51
A.4.8.1.9 Workmanship ....51
A.4.8.2 Microsection inspection ....52
A.4.8.2.1 Plated-through hole inspection ....53
A.4.8.2.2 Registration ....53
A.4.8.2.2.1 By microsection (method II) ....53
A.4.8.2.2.2 By registration test coupons (method III) ....53
A.4.8.3 Chemical inspection ....54
A.4.8.3.1 Ionic contamination ....54
A.4.8.3.2 Resistance to solvents ....54
A.4.8.3.2.1 Sampling procedures and test specimens ....54



Source: https://assist.dla.mil -- Downloaded: 2016-11-03T17:14Z
Check the source to verify that this is the current version before use.

CONTENTS

PARAGRAPH PAGE

A.4.8.4 Physical inspections ....54
A.4.8.4.1 Adhesion, cover material ....54
A.4.8.4.2 Adhesion, legend and marking ....54
A.4.8.4.3 Adhesion, plating ....54
A.4.8.4.4 Adhesion, solder mask ....54
A.4.8.4.5 Bow and twist ....54
A.4.8.4.6 Flexibility endurance ....54
A.4.8.4.6.1 Test specimens ....55
A.4.8.4.7 Folding flexibility ....55
A.4.8.4.7.1 Test specimens ....55
A.4.8.4.8 Rework simulation ....55
A.4.8.4.8.1 Unsupported hole ....55
A.4.8.4.8.2 Plated-through hole ....56
A.4.8.4.9 Solderability ....56
A.4.8.4.9.1 Hole (plated-through hole) ....56
A.4.8.4.9.2 Surface or surface mount land ....56
A.4.8.4.10 Solder mask cure ....56
A.4.8.4.11 Surface peel strength ....56
A.4.8.4.11.1 Test specimens ....56
A.4.8.5 Electrical inspection ....57
A.4.8.5.1 Continuity and circuit shorts ....57
A.4.8.5.1.1 Production screening ....57
A.4.8.5.1.2 Qualification and referee testing ....57
A.4.8.5.1.2.1 Circuit continuity ....57
A.4.8.5.1.2.2 Circuit shorts ....57
A.4.8.5.2 Circuit or plated-through hole short to metal core substrate ....57
A.4.8.5.3 Dielectric withstanding voltage ....57
A.4.8.5.4 Impedance testing ....57
A.4.8.6 Environmental inspection ....58
A.4.8.6.1 Moisture and insulation resistance ....58
A.4.8.6.2 Resistance to soldering heat ....58
A.4.8.6.2.1 Solder float thermal stress ....58
A.4.8.6.3 Thermal shock ....58
A.5. PACKAGING ....58
A.5.1 Packaging ....58
A.6. NOTES ....58
A.6.1 Intended use ....58
A.6.2 Acquisition requirements ....58
A.6.2.1 Primary acquisition requirements ....58
A.6.2.2 Additional acquisition requirements ....59
A.6.3 Qualification ....60
A.6.3.1 Qualification test specimens ....60
A.6.3.2 Transference of qualification ....60
A.6.3.3 Qualification expiration and QPL–50884 ....60
A.6.4 Ionic contamination testing ....60
A.6.4.1 Flux removal ....60
A.6.4.2 Alternate methods and equipment ....60
A.6.5 Certified suitable laboratories ....61
A.6.6 Alternate test methods ....61
A.6.6.1 Flexibility endurance ....61
A.6.7 Group B sample critical design details ....61
A.6.8 Tin finishes ....61
A.6.9 DSCC Form 19W ....61



Source: https://assist.dla.mil -- Downloaded: 2016-11-03T17:14Z
Check the source to verify that this is the current version before use.

CONTENTS

PARAGRAPH PAGE

A.6.10 Alternate microsection preparation procedure guidelines....62
A.6.11 Microsection mount microetch caution....62
A.6.12 Blind, buried, and through vias....62
A.6.13 Stiffener adhesion test and requirement....62
A.6.14 Referenced IPC–TM–650 test methods....62
A.7. DEFINITIONS....62
A.7.1 Base material types....62
A.7.2 Complex (as related to group B testing)....63
A.7.3 Conductive interfaces....63
A.7.3.1 External conductive interfaces....63
A.7.3.2 Internal conductive interfaces....63
A.7.4 Contract services....63
A.7.4.1 Mass lamination....63
A.7.5 Cover material....63
A.7.5.1 Covercoat....63
A.7.5.2 Coverfilm....63
A.7.5.3 Coverlay....63
A.7.6 Inspection panel....63
A.7.7 Printed wiring board test specimen....63
A.7.8 Procedure....64
A.7.9 Resin systems families....64
A.7.9.1 Thermosetting resin....64
A.7.9.2 Thermoplastic resin....64
A.7.10 Printed wiring board thickness....64
A.7.11 Quality conformance test circuitry....64
A.7.12 As-received condition (microsection)....64
A.7.13 Fold cycle....64
A.7.14 Soda strawing (solder mask)....64
A.7.15 Traceability code....64
A.7.16 Qualified Products Database Supplemental Information Sheet....64

APPENDIX B. Optional Product Assurance Requirements For Qualified Manufacturer List Programs....65
B.1. SCOPE....65
B.1.1 Scope....65
B.2. APPLICABLE DOCUMENTS....65
B.2.1 General....65
B.2.2 Government documents....65
B.2.2.1 Specifications, standards, and handbooks....65
B.2.3 Order of precedence....65
B.3. REQUIREMENTS....65
B.3.1 Performance requirements....65
B.3.2 Accept/reject criteria....65
B.3.3 QML brand....65
B.4. VERIFICATION....66
B.4.1 Qualification inspection (reciprocal qualification from MIL–PRF–31032)....66
B.4.1.1 Concurrent qualification....66
B.4.1.2 Retention....66
B.4.2 QPL/QML product assurance....66
B.4.3 Printed wiring board performance verification....66
B.5. PACKAGING....67
B.5.1 Packaging....67



Source: https://assist.dla.mil -- Downloaded: 2016-11-03T17:14Z
Check the source to verify that this is the current version before use.

CONTENTS

PARAGRAPH PAGE

B.6. NOTES ....67
B.6.1 Intended use ....67
B.6.2 Application of the QPL/QML product assurance level to existing requirements ....67
B.6.2.1 Use of existing master drawings ....67
B.6.2.2 Form, fit, and function ....67
B.6.2.3 Certification of conformance ....67
B.6.3 Benefits of the QPL/QML product assurance level ....67
B.6.4 Retention of qualification ....68
B.6.5 Certification of conformance and acquisition traceability ....68
B.6.6 Past specification revisions ....68

APPENDIX C. C = 0 (Zero Defect) Sampling, Test Equipment, And Suitability Of Inspection Facilities ....69
C.1. SCOPE ....69
C.1.1 Scope ....69
C.2. APPLICABLE DOCUMENTS ....69
C.2.1 General ....69
C.2.2 Non–Government publications ....69
C.2.3 Order of precedence ....69
C.3. DEFINITIONS AND SYMBOLS ....69
C.3.1 Definitions ....69
C.3.2 Symbols ....70
C.4. STATISTICAL SAMPLING PROCEDURES AND SAMPLE PLAN TABLE ....70
C.4.1 General ....70
C.4.2 Acceptance and procedure ....70
C.4.2.1 Acceptance number (C = 0) ....70
C.4.2.2 Rejection number (R ≥ 1) ....70
C.4.3 Tightened inspection (for reevaluation purposes) ....70
C.4.4 Sample size ....70
C.4.5 C = 0 sample plan construction (selection and usage of the sample size series) ....71
C.5. TEST EQUIPMENT, CALIBRATION, MEASUREMENTS, AND INSPECTION FACILITIES ....71
C.5.1 Test equipment and calibration ....71
C.5.1.1 Resolution of measurement devices and test equipment capability ....71
C.5.1.2 Electrical test frequency ....72
C.5.2 Test methods ....72
C.5.2.1 Acquiring activity or manufacturer imposed tests ....72
C.5.2.2 Test method alternatives or variations ....72
C.5.2.3 Procedure in case of test equipment malfunction or operator error ....72
C.5.3 Numeric reporting ....72
C.5.3.1 Observed values (true and nominal) ....72
C.5.3.2 Significant digits ....72
C.5.3.3 Rounding method ....72
C.5.4 Control based on uncertainty ....73
C.6. SUITABILITY OF INSPECTION FACILITIES ....73
C.6.1 Suitability of inspection facilities ....73
C.6.2 Suitability status and test reports ....74
C.7. DEFINITIONS FOR TEST EQUIPMENT AND INSPECTION FACILITIES ....74
C.7.1 Accuracy ....74
C.7.2 Bias ....74
C.7.3 Calibration ....74
C.7.4 Limit or specification limit ....74
C.7.5 Measurement and testing equipment ....74
C.7.6 Precision ....74



Source: https://assist.dla.mil -- Downloaded: 2016-11-03T17:14Z
Check the source to verify that this is the current version before use.

CONTENTS

PARAGRAPH PAGE

C.7.7 Resolution ....75
C.7.8 Standard reference material (SRM) ....75
C.7.9 Tolerance ....75
C.7.10 Uncertainty ....75
C.8 Supporting documents ....75

APPENDIX D. Supersession and Usage of Current and Legacy Design Standards ....77
D.1. SCOPE ....77
D.1.1 Scope ....77
D.2. APPLICABLE DOCUMENTS ....77
D.2.1 General ....77
D.2.2 Non–Government publications ....77
D.2.3 Order of precedence ....77
D.3. DEFINITIONS ....77
D.3.1 Design standard ....77
D.3.2 Legacy designs or documents ....77
D.3.3 Supersession ....78
D.3.4 Quality conformance test circuitry ....78
D.3.5 Printed wiring board type ....78
D.4. SUPERSESSION ....78
D.4.1 Superseded specifications ....78
D.4.1.1 Reference to superseded specifications ....78
D.4.1.2 Revisions ....78
D.4.2 Superseded guidelines and standards ....78
D.4.2.1 Retooling ....78
D.4.2.2 Superseded types ....79
D.4.3 Testing ....79
D.4.3.1 Group A inspection ....79
D.4.3.2 Group B samples and testing ....79
D.4.3.3 Group C samples and testing ....79
D.4.4 Superseded test coupons ....79
D.4.5 Test coupons, placement, quantity and usage ....79
D.4.5.1 Intended use and intent of this appendix ....79
D.4.5.2 Guidance concerning legacy test coupons ....80

APPENDIX E. Sequential Electrochemical Reduction Analysis Solderability Test ....81
E.1. SCOPE ....81
E.1.1 Scope ....81
E.2. APPLICABLE DOCUMENTS ....81
E.2.1 General ....81
E.2.2 Government documents ....81
E.2.2.1 Specifications, standards, and handbooks ....81
E.2.3 Non–Government publications ....81
E.2.4 Order of precedence ....82
E.3. DEFINITIONS ....82
E.3.1 Sequential Electrochemical Reduction Analysis (SERA) ....82
E.4. TESTING ....82
E.4.1 Apparatus ....82
E.4.1.1 Reservoir ....82
E.4.1.2 Test head ....83
E.4.1.3 Vacuum pump ....83
E.4.1.4 Gas regulator ....83
E.4.1.5 SCE reference electrode ....83



Source: https://assist.dla.mil -- Downloaded: 2016-11-03T17:14Z
Check the source to verify that this is the current version before use.

CONTENTS

PARAGRAPH PAGE

E.4.1.6 Computer ....83
E.4.1.7 IEEE-488 interface card ....83
E.4.1.8 Digital multimeter ....83
E.4.1.9 Programmable current source ....83
E.4.1.10 Printed wiring board (PWB) contact pin ....83
E.4.2 Materials ....84
E.4.2.1 Borate buffer solution ....84
E.4.2.2 Inert gas ....84
E.4.2.3 Deionized water ....84
E.4.2.4 Isopropyl alcohol ....84
E.4.2.5 Potassium chloride solution (KCl) ....84
E.5. PROCEDURE ....84
E.5.1 General ....84
E.5.2 Preparation of SERA systems ....84
E.5.3 Application of test method ....85
E.5.4 Plated-through hole area calculation ....85
E.5.5 Evaluation of test data ....86
E.5.6 Proper post test preparation of SERA system ....88
E.6. NOTES ....88
E.6.1 Notes regarding the SERA test ....88

APPENDIX F. External Visual And Dimensional Illustrations ....91
F.1. SCOPE ....91
F.1.1 Scope ....91
F.2. APPLICABLE DOCUMENTS ....91
F.3. EXTERNALLY OBSERVABLE CHARACTERISTICS ....91
F.3.1 General ....91

APPENDIX G. Metallographic Illustrations ....99
G.1. SCOPE ....99
G.1.1 Scope ....99
G.2. APPLICABLE DOCUMENTS ....99
G.3. INTERNALLY OBSERVABLE CHARACTERISTICS ....99
G.3.1 General ....99

APPENDIX H. Quality Conformance Test Circuitry ....111
H.1. SCOPE ....111
H.1.1 Scope ....111
H.2. APPLICABLE DOCUMENTS ....111
H.2.1 General ....111
H.2.2 Non–Government publications ....111
H.2.3 Order of precedence ....111
H.3 QUALITY CONFORMANCE TEST CIRCUITRY (QCTC) REQUIREMENTS ....111
H.3.1 General ....111
H.3.1.1 Panel location and placement of test coupons ....112
H.3.1.2 Performance and reliability verification test coupons ....112
H.3.1.3 Process control and acquiring activity required test coupons ....112
H.3.2 QCTC strip identification ....112
H.3.3 Using table H–I ....112
H.3.3.1 Test coupon quantity codes ....113
H.3.3.2 Test coupon placement codes ....113
H.3.3.3 Test coupon inspection group usage codes ....113



Source: https://assist.dla.mil -- Downloaded: 2016-11-03T17:14Z
Check the source to verify that this is the current version before use.

CONTENTS

PARAGRAPH PAGE

H.4. TEST COUPONS AND TEST SPECIMENS....115
H.4.1 General test coupon requirements....115
H.4.2 Process control test coupons....115
H.4.3 Designs and placement....115
H.4.3.1 Test specimens for the verification of resistance to solvents....115
H.4.3.1.1 Design of test specimens used for resistance to solvents....115
H.4.3.1.2 Panel placement....115
H.4.3.2 Test specimens for the verification of flexibility endurance....115
H.4.3.2.1 Designs of test specimens used for flexibility endurance....115
H.4.3.2.2 Panel placement....115
H.4.3.3 Test specimens for the verification of folding flexibility....115
H.4.3.3.1 Designs of test specimens used for folding flexibility....115
H.4.3.3.2 Panel placement....115
H.4.3.4 Test coupons for the verification of conductor surface peel strength....116
H.4.3.4.1 Design of test specimens for verification of conductor surface peel strength....116
H.4.3.4.2 Panel placement....116
H.4.3.5 Alternate test coupon for the verification of moisture and insulation resistance....116
H.4.3.5.1 Design of alternate test coupon ‘E’....116
H.4.3.5.2 Panel placement....116
H.4.3.6 Test coupons for the verification of coverlayer adhesion....116
H.4.3.6.1 Design of test specimens for coverlayer adhesion....116
H.4.3.6.2 Panel placement....116
H.4.3.7 Test coupons for the verification of adhesion, legend and marking....116
H.4.3.7.1 Design of test specimens for legend and marking adhesion....116
H.4.3.7.2 Panel placement....116
H.4.3.8 Alternate test coupon for the verification of registration....117
H.4.3.8.1 Design of alternate registration test coupon....117
H.4.3.8.2 Panel placement....117
H.5. NOTES....117
H.5.1 Discussion....117

TABLES

TABLE A–I. Conductor surface finish plating and coating thickness....23
TABLE A–II. Thickness of conductors with copper plating (after processing)....23
TABLE A–III. Thickness of conductors without copper plating (after processing)....24
TABLE A–IV. Plated-through hole copper plating thickness....25
TABLE A–V. Blind and buried via copper plating thickness....26
TABLE A–VI. Qualification inspection....39
TABLE A–VII. In–process inspection....43
TABLE A–VIII. Group A inspection....46
TABLE A–IX. Group B inspection....48
TABLE A–X. Group C inspection....49
TABLE A–XI. Inspection magnification....50
TABLE A–XII. Equivalence factor....61
TABLE C–I. C = 0 (zero defect) sampling....71
TABLE D–I. Test coupon translation....80
TABLE E–I. SERA plated-through hole example calculation data....86
TABLE E–II. Minimum acceptable V2 value....87
TABLE E–III. SERA values for ROM0 or ROM1 flux in accordance with J–STD–004....87
TABLE H–I Test coupons on inspection panels....114



Source: https://assist.dla.mil -- Downloaded: 2016-11-03T17:14Z
Check the source to verify that this is the current version before use.

CONTENTS

PARAGRAPH PAGE

FIGURES

FIGURE A–1. Folding flexibility ....55

FIGURE E–1. Schematic of SERA plated through hole apparatus ....82
FIGURE E–2. Example SERA differentiated/smoothed curve ....89

FIGURE F–1. Transition zone for flexible to rigid junctions ....91
FIGURE F–2. External annular ring measurement ....92
FIGURE F–3. Adhesive on land ....92
FIGURE F–4. Conductor pattern imperfection measurement ....93
FIGURE F–5. Conductor edge definition imperfection measurement ....94
FIGURE F–6. Rectangular surface mount lands ....95
FIGURE F–7. Round surface mount lands (BGA pads) ....95
FIGURE F–8. Cover material separations ....96
FIGURE F–9. Cover layer access hole registration ....97
FIGURE F–10. Cover layer, wicking of conductor surface finish ....97
FIGURE F–11. Solder mask registration ....98
FIGURE F–12. Solder mask deviations ....98

FIGURE G–1. Typical plated-through hole cross section after stress testing ....99
FIGURE G–2. Dielectric thickness measurement ....100
FIGURE G–3. Isolated heatsink plane dielectric spacing ....101
FIGURE G–4. Insulation material cracks, metal cores or heatsink planes ....101
FIGURE G–5. Internal annular ring measurements ....102
FIGURE G–6. Smear removal ....102
FIGURE G–7. Etchback ....103
FIGURE G–8. Forms of plating connections to internal layers ....103
FIGURE G–9. Types of lifted lands ....104
FIGURE G–10. Copper plating thickness ....104
FIGURE G–11. Acceptable plated-through hole wrap copper plating. ....105
FIGURE G–12. Acceptable planarized plated-through hole wrap copper plating ....105
FIGURE G–13. Unacceptable planarized plated-through hole wrap copper plating ....106
FIGURE G–14. Copper plating voids ....106
FIGURE G–15. Plated-through hole deficiencies ....107
FIGURE G–16. Acceptable separation at external copper foil ....108
FIGURE G–17. Wicking ....108
FIGURE G–18. Metallic cracks ....109

FIGURE H–1. Panel location of quality control test circuitry ....118
FIGURE H–2. Test coupon P ....119
FIGURE H–3. Alternate design for test coupon E ....119



Source: https://assist.dla.mil -- Downloaded: 2016-11-03T17:14Z
Check the source to verify that this is the current version before use.

This specification is approved for use by all Departments and Agencies of the Department of Defense.

1. SCOPE

1.1 Scope. This specification establishes the performance and qualification requirements for flexible and rigid-flex printed wiring boards with or without plated through holes (see 6.1). Verification is accomplished through the use of one of two methods of product assurance (appendix A or appendix B). Detail requirements, specific characteristics, and other provisions which are sensitive to the particular intended use are specified in the applicable master drawing.

1.2 Classification. Printed wiring boards are classified by 1.2.1, 1.2.2, and 1.2.3.

1.2.1 Printed wiring board type. The printed wiring boards covered by this specification are of the following types:

Type 1 – Singled–sided flexible printed wiring board (see 6.4.3.1) with or without shields or stiffeners.

Type 2 – Double–sided flexible printed wiring board (see 6.4.3.2) with or without shields or stiffeners with or without plated-through holes.

Type 3 – Multilayer flexible printed wiring board with plated holes (see 6.4.3.3) and with or without shields or stiffeners.

Type 4 – Multilayer rigid and flexible printed wiring board with plated-through holes (see 6.4.3.4).

Type 5 – Bonded rigid and/or flexible printed wiring board combinations without plated-through holes (see 6.4.3.5).

1.2.2 Installation use. The printed wiring boards covered by this specification are for the following installation uses:

Use A – Capable of withstanding flexing during installation (flex to install).

Use B – Capable of withstanding continuous flexing for the number of cycles specified (see 3.1.1).

1.2.3 Rework capability (see 6.6.1). The printed wiring boards covered by this specification are of the following rework capability grades:

Grade R – Flexible printed wiring that is capable of withstanding at least three solder and two unsolder operations without terminal area degradation.

Grade U – Flexible printed wiring that is capable of withstanding at least one solder operation without terminal area degradation. This grade can only be used in electrical or electronic assemblies that will not require an unsolder and re–solder capability.

If not specified on the applicable master drawing, the default rework capability is grade R.

1.2.4 Flexible base material. The printed wiring board flexible base material type should be identified by the base material designators of the applicable flexible base material specification as required by the master drawing (see 3.1.1).

1.2.5 Rigid base material (designs with stiffeners). The printed wiring board rigid base material type should be identified by the base material designators of the applicable base material specification as required by the master drawing (see 3.1.1).



Source: https://assist.dla.mil -- Downloaded: 2016-11-03T17:14Z
Check the source to verify that this is the current version before use.

1.3 Description of this specification. The main body contains general provisions and is supplemented by detailed appendices. Appendices A and B describe the two product assurance programs that can be implemented by the manufacturer. Appendix A contains the traditional QPL product assurance program. Appendix B is an optional quality management approach using a technical review board concept addressed in MIL–PRF–31032, to modify the generic verification criteria provided in this specification. Appendix C provides statistical sampling, and basic test and inspection procedures. Appendix D can be used when producing printed wiring boards designed to superseded design standards (see 6.4.1 and D.4.2). Appendix D may also be used as a guide in developing a test plan for legacy or existing designs based on the tests and inspections of appendix A. Appendix E is optional and describes an alternative procedure used to evaluate oxidation levels on solderable surfaces. The procedure involves using electrochemical reduction techniques to determine the type and quantity of oxide on plated-through holes. Appendices F and G contain illustrations of the acceptable and unacceptable conditions that are either externally or internally observable on printed wiring boards. Appendix H contains the requirements for quality control test circuitry and is mandatory for manufacturers qualified to the QPL product assurance level of this specification.

## 2. APPLICABLE DOCUMENTS

2.1 General. The documents listed in this section are specified in sections 3, 4, or 5 of this specification. This section does not include documents cited in other sections of this specification or recommended for additional information or as examples. While every effort has been made to ensure the completeness of this list, document users are cautioned that they must meet all specified requirement documents cited in sections 3 and 4 of this specification, whether or not they are listed.

2.2 Non–Government publications. The following documents form a part of this document to the extent specified herein. Unless otherwise specified, the issues of these documents are those cited in the solicitation or contract.

IPC – ASSOCIATION CONNECTING ELECTRONICS INDUSTRIES (IPC)

IPC–T–50 – Terms and Definitions for Interconnecting and Packaging Electronic Circuits. (DoD adopted).

(Application for copies should be addressed to the IPC – Association Connecting Electronics Industry, 3000 Lakeside Drive, Suite 309 S, Bannockburn, IL 60015–1249 or http://www.ipc.org.)

(Non–Government standards and other publications are normally available from the organizations that prepare or distribute the documents. These documents also may be available in or through libraries or other informational services.)

2.3 Order of precedence. Unless otherwise noted herein or in the contract, in the event of a conflict between the text of this document and the references cited herein, the text of this document takes precedence. Nothing in this document, however, supersedes applicable laws and regulations unless a specific exemption has been obtained.

## 3. REQUIREMENTS

3.1 General requirements. The manufacturer of printed wiring boards, in compliance with this specification, shall use, or have access to production and verification facilities adequate to assure successful compliance with the provisions of this specification and the associated master drawing. Adequacy of a printed wiring board manufacturer to meet the requirements of this specification shall be determined by the Government qualifying activity (Defense Supply Center, Columbus, code DSCC–VQE). Only printed wiring boards which are verified and meet all the applicable performance requirements herein and the design, construction, and material requirements of the associated master drawing shall be certified as compliant and delivered.

3.1.1 Master drawing. Printed wiring boards delivered under this specification shall be of the material, design, and construction specified on the applicable master drawing.



Source: https://assist.dla.mil -- Downloaded: 2016-11-03T17:14Z
Check the source to verify that this is the current version before use.

3.1.2 Conflicting requirements. In the event of conflict between the requirements of this specification and other requirements of the applicable master drawing, the precedence in which documents shall govern, in descending order, is as follows:

a. The applicable master drawing (see 3.1.1). Additional acquisition requirements (see 6.2) may be provided in the order or contract. Any deletion of any of the performance requirements or performance verifications of this specification not approved by the qualifying activity, will result in the printed wiring board being deemed noncompliant with this specification.

b. This specification.

c. The applicable design standard (see 3.1.1, A.3.3 as applicable).

d. Specifications, standards, and other documents referenced in section 2.

3.1.3 Terms and definitions. The definitions for all terms used herein shall be as specified in IPC–T–50 and those contained herein (see 6.4, and appendices A, B, C, D, E, F, G, and H).

3.2 Qualification. Printed wiring boards furnished under this specification shall be products that are authorized by the qualifying activity for listing on the applicable Qualified Products List (QPL) at the time of award of contract (see A.4.5 and 6.3). In addition, the manufacturer shall certify (for QPL) or receive certification from the qualifying activity (for QPL/Qualified Manufacturer's List (QML)) that the product assurance requirements of 3.3 have been met and are being maintained.

3.2.1 QPL. The qualification requirements for the QPL product assurance level shall be in accordance with appendix A. Products qualified in accordance with appendix A shall be requalified every 36 months (see 6.3.4).

3.2.2 QPL/QML. The qualification requirements for the QPL/QML product assurance level shall be in accordance with appendix B. Products qualified in accordance with appendix B are monitored and maintained through the manufacturer’s Capability Verification Inspection program and do not require requalifiication to this specification.

3.3 Product assurance requirements. This document contains two different methods of product assurance for printed wiring board compliance. The two levels of printed wiring product assurance are QPL (see 3.3.1) and QPL/QML (see 3.3.2) as defined herein.

3.3.1 QPL product assurance. A product assurance program for QPL printed wiring boards furnished under this specification shall satisfy the requirements of appendix A. QPL product assurance procedures shall be made available to the qualifying activity no later than 6 months after the date of this specification in order for the manufacturer to be retained on QPL No. 50884. The manufacturer shall ensure the product assurance procedures reflect the actual product assurance practices of the manufacturing location qualified. The qualifying activity shall be notified within 28 days of any changes to these procedures. The product assurance procedures shall, as a minimum, consist of the items outlined in A.3.2.1.

3.3.2 QPL/QML product assurance. A product assurance program for QPL/QML printed wiring boards furnished under this specification shall satisfy the requirements of appendix B. QPL/QML product assurance procedures shall be made available to the qualifying activity no later than 6 months after the date of this specification in order for the manufacturer to be retained on QPL No. 50884. The manufacturer shall ensure the product assurance procedures reflect the actual product assurance practices of the manufacturing location qualified. The qualifying activity shall be notified concurrently of any changes to these procedures.

3.4 Letters of interpretation and policy. Letters of interpretation and policy applicable to this document shall be approved in writing by the preparing activity. All letters of interpretation and policy applicable to MIL–P–50884 written prior to the current date of this document are not applicable to this revision. All subsequent letters of interpretation and policy letters are valid only until the next document change action (amendment or revision).



Source: https://assist.dla.mil -- Downloaded: 2016-11-03T17:14Z
Check the source to verify that this is the current version before use.

3.5 Recycled, recovered, or environmentally preferable materials. Recycled, recovered, or environmentally preferable materials should be used to the maximum extent possible provided that the material meets or exceeds the operational and maintenance requirements, and promotes economically advantageous life cycle costs.

3.6 Certification of conformance and acquisition traceability. Unless otherwise specified by the contract or order (see 6.2), a certificate of conformance for compliant printed wiring boards shall be forwarded to the acquiring activity (see 6.4.1). When a certificate of conformance for compliant printed wiring boards is supplied, it shall include the following information, as a minimum:

a. Manufacturer's name and address.

b. Customer's name and address.

c. Manufacturer's CAGE (Commercial and Government Entity) code (see 6.4.5).

d. Printed wiring board description, including classification (printed wiring board type and base materials), specification number with revision letter and amendment number when applicable, the applicable product assurance level (either QPL or QPL/QML), master drawing or other identification number, and the applicable design standard.

e. Lot date code.

f. Quantity of printed wiring boards in shipment from manufacturer.

g. Statement certifying printed wiring board conformance to this specification, the master drawing, and the contract or order.

h. The date of transaction.

i. The name of the company official approving the certificate of conformance. The manufacturer shall have a method for authenticating the approval of certificates of conformance for printed wiring boards compliant to this specification.

3.7 Qualifying activity on–site audit. Manufacturers listed on QPL–50884 will be required to undergo periodic on–site audits of their facilities by the qualifying activity. The manufacturer shall demonstrate to the qualifying activity that controls have been implemented to assure compliance to the requirements of this specification. The qualifying activity reserves the right to perform on–site audits of any other facilities, such as contracted services, that the manufacturer uses for producing printed wiring boards to this specification.

3.8 Workmanship. Printed wiring boards shall be processed in such a manner as to be uniform in quality and shall be free from other defects that will affect life, serviceability, or appearance.

## 4. VERIFICATION

4.1 Classification of inspections. The inspection requirements specified herein are classified as follows:

a. Qualification inspection (see A.4.5 or B.4.1).

b. Inspection of product for delivery (see A.4.6 or B.4.3.a).

c. Periodic conformance inspection (see A.4.7 or B.4.3.b).



Source: https://assist.dla.mil -- Downloaded: 2016-11-03T17:14Z
Check the source to verify that this is the current version before use.

4.2 Printed wiring board performance verification.

4.2.1 QPL. Printed wiring board performance verification inspection shall consist of inspections on the production printed wiring boards and the quality conformance test circuitry or test coupons referenced in appendix A.

4.2.2 QPL/QML. The minimum requirements for printed wiring board performance verification to the QPL/QML product assurance level shall satisfy the guidelines of appendix B.

4.3 Qualification inspection. Qualification is possible by two different methods based on the product assurance level used, QPL (see 4.3.1) or QPL/QML (see 4.3.2).

4.3.1 QPL. Qualification inspection for the QPL product assurance level shall be performed at a laboratory acceptable to the Government (hereafter referred to as a "certified suitable laboratory", see A.6.5 and C.6) on qualification test specimens produced with material, equipment, processes, and procedures that will be used in subsequent production. The requirements concerning the qualification test specimens, number of specimens to be tested, and the test routines they shall be subjected to, and the extent of qualification shall be as specified in appendix A.

4.3.2 QPL/QML. The minimum requirements for qualification to the QPL/QML product assurance level shall be as specified in appendix B. Qualification to appendix B shall be extended to cover qualification to appendix A. Manufacturers qualified through appendix B may accept and certify orders to appendix A product assurance level.

5. PACKAGING

5.1 Packaging. For acquisition purposes, the packaging requirements shall be as specified in the contract or order (see 6.2). When packaging of materiel is to be performed by DoD or in–house contractor personnel, these personnel need to contact the responsible packaging activity to ascertain packaging requirements. Packaging requirements are maintained by the Inventory Control Point's packaging activity within the Military Service or Defense Agency, or within the Military Service's system commands. Packaging data retrieval is available from the managing Military Department's or Defense Agency's automated packaging files, CD–ROM products, or by contacting the responsible packaging activity.

6. NOTES

(This section contains information of a general or explanatory nature that may be helpful, but is not mandatory.)

6.1 Intended use. Flexible and rigid–flex printed wiring boards are intended primarily for use in ground support, airborne, and shipboard electronic equipment and electrical equipment to eliminate high density hand wiring, where space is limited and where compact packaging is desirable.

6.2 Acquisition requirements. Acquisition documents should specify the following:

a. Title, number, revision letter (with any amendment number when applicable), and date of this specification.

b. The specific issue of individual documents referenced (see 2.2).

c. Packaging requirements (see 5.1).

d. Appropriate printed wiring board type (see 1.2.1), installation use (see 1.2.2) and rework capability grade (see 1.2.3).

e. Title, number, revision letter (with any engineering change proposal or notice of revision number when applicable), and date of the applicable master drawing (see 3.1.1).



Source: https://assist.dla.mil -- Downloaded: 2016-11-03T17:14Z
Check the source to verify that this is the current version before use.

6.3 Qualification. With respect to products requiring qualification, awards will be made only for products which are, at the time of award of contract, qualified for inclusion in Qualified Products List (QPL) No. 50884 whether or not such products have actually been so listed by that date. The attention of the contractors is called to these requirements, and manufacturers are urged to arrange to have the products that they propose to offer to the Federal Government tested for qualification in order that they may be eligible to be awarded contracts or orders for the products covered by this specification. Information pertaining to qualification of products may be obtained from Defense Supply Center Columbus, ATTN: DSCC–VQE, P.O. Box 3990, Columbus, Ohio 43218–3990, or by e-mail to 5998.Qualifications@dla.mil, or at Universal Resource Locator (URL) http://www.dscc.dla.mil/programs/qmlqpl. An online listing of products qualified to this specification may be found in the Qualified Products Database (QPD) at http://assist.daps.dla.mil. Application procedures should conform to the guidelines of SD–6, "Provisions Governing Qualification" (see 6.3.3).

6.3.1 Transference of qualification. Manufacturers currently qualified to MIL–P–50884D with amendment 2 will have their qualification transferred to this document under the conditions described in 3.3.1 and 3.3.2. The expiration date of their current qualification will not be changed. Qualifications in process (before the date of this document) will be performed to the requirements specification revision and amendment as listed on the approved Authorization to Test Form, DSCC Form 19W, available from the qualifying activity. New applications for qualification (after the date of this document) should be performed to the requirements of this revision.

6.3.2 Retention of qualification. Printed wiring boards verified and certified to MIL–P–50884C (with any amendment) or MIL–P–50884D (with any amendment) to any product assurance level contained herein may be used to meet retention of qualification production to this document (see A.4.5.6).

6.3.2.1 Discussion. MIL–P–50884C (unamended) certification program was not governed by the policies and procedures of the Defense Standardization Program as defined by DoD 4120.3–M and therefore does not exist within the QPL program of MIL–P–50884C with Amendment 1 and beyond. For additional information concerning this issue, see MIL–P–50884C, paragraph 60.1.

6.3.3 "Provisions Governing Qualification". Copies of SD–6, "Provisions Governing Qualification", may be downloaded at URL http://assistdocs.com/search or obtained upon application to Document Automation and Production Services (DAPS), Building 4D (DPM–DODSSP), 700 Robbins Avenue, Philadelphia, PA 19111–5094.

6.3.4 QPL requalification. Manufacturers qualified to appendix A of this specification are required to repeat the qualification process of appendix A every 36 months for each listing on QPL No. 50884. Changes to any process from those originally qualified may require requalification.

6.4 Terms and definitions.

6.4.1 Acquiring activity. The organizational element of the Government which contracts for articles, supplies, or services may authorize a contractor or sub-contractor to be its agent. When this organizational element of the Government has given specific written authorization to a contractor or sub-contractor to serve as agent, the agent will not have the authority to grant waivers, deviations, or exceptions to this specification unless specific written authorization to do so has also been given by the Government organization, which is the preparing activity or qualifying activity. In the absence of a specific acquiring activity, the acquiring activity will be an organization within the supplier's company that is independent of the group responsible for device design, process development, or screening, or may be an independent organization outside the supplier's company.

6.4.2 Design standard. A document that establishes the baseline parameters (default values), standard practices and guidelines for the design of printed wiring boards. Within this document, the term "design standard" is used to describe those documents that contains the design, construction, material, and test coupon requirements and guidelines used to produce panels of flexible printed wiring boards.



Source: https://assist.dla.mil -- Downloaded: 2016-11-03T17:14Z
Check the source to verify that this is the current version before use.

6.4.3 Printed wiring board type. The printed wiring board type should be as specified in IPC–2223. The legacy printed wiring board types of MIL–STD–2118 correspond to the types described in IPC–2223 and are listed herein.

6.4.3.1 Type 1. Type 1 flexible printed wiring boards have only one conductive layer (single sided conductor pattern) with coverlayer and no plating in the component holes. In addition, the design may contain shields or stiffeners. Type 1 flexible printed wiring boards are usually designed for installation use B (continuous flex) applications.

6.4.3.2 Type 2. Type 2 flexible printed wiring boards are printed wiring boards with conductor patterns on both sides of the printed wiring board (double sided). In addition, the design of the printed wiring board may require the following: (1) that the holes through the base material be plated through to connect the conductor patterns on both sides together, (2) with or without shields, and (3) with or without stiffeners. Type 2 flexible printed wiring boards are usually designed for installation use B (continuous flex) applications.

6.4.3.3 Type 3. Type 3 flexible printed wiring boards are multilayered (with three or more conductor layers) with plated-through holes. Type 3 printed wiring boards are usually designed for installation use A (flex to install) applications.

6.4.3.4 Type 4. Type 4 flex–rigid printed wiring boards are multilayered boards containing plated-through holes with rigid sections connected by flexible sections. Type 4 printed wiring boards are usually designed to be used in installation use A (flex to install) applications.

6.4.3.5 Type 5. Type 5 printed wiring boards are multilayer bonded rigid and flexible printed wiring board combinations without plated-through holes. Type 5 printed wiring boards are usually designed to be used in installation use A (flex to install) applications.

6.4.4 Product assurance. The method of complying with the two different levels of this document using either the QPL method (implemented by amendment 1 to MIL–P–50884C) or the new method QPL/QML (introduced within MIL–P–50884D).

6.4.4.1 QML. A list of manufacturers, by name and plant address, who have met the certification and qualification requirements stated in MIL–PRF–31032. A QML focuses on qualifying an envelope of materials and processes rather than individual products or designs. That envelope is qualified by carefully selecting representative worst case test vehicles or representative samples from production that contain all potential combinations of materials and processes that may be subsequently used during production. A QML is normally appropriate for items of supply that have very rapid technological advancement or a myriad of variations or custom designs that make individual product qualifications impractical or excessively expensive.

6.4.4.2 QPL. A QPL focuses on qualifying individual products or families of products. A QPL will normally be appropriate for items of supply that are stable and will be continually available for extended period of time.

6.4.4.3 QPL/QML. A transitional program that allows a manufacturer that is certified and qualified to the QML program of MIL–PRF–31032 to fabricate, test, and supply products to this revision of this document.

6.4.5 Commercial and Government Entity (CAGE) code. The Commercial and Government Entity Code, or CAGE Code, is a 5 digit identifier assigned to suppliers to the Federal Government of the United States of America in order to provide a standardized method of identifying a given facility or a specific location. CAGE was previously known as Federal Supply Code for Manufacturers (FSCM) and also the National Supply Code for Manufacturers (NSCM). U.S. based companies can obtain CAGE code information at URL: http://www.dlis.dla.mil/cage_welcome.asp. Non-U.S. based companies can obtain CAGE code information at URL: http://www.dlis.dla.mil/nato_poc.asp.

6.5 Compliant printed wiring boards. For a printed wiring board to be compliant with this document, it has to be produced by a manufacturer qualified for listing on QPL No. 50884 or reciprocal listing as described in appendix B, and come from a lot which was subjected to and passed all inspection of product for delivery verifications using the applicable product assurance program.



Source: https://assist.dla.mil -- Downloaded: 2016-11-03T17:14Z
Check the source to verify that this is the current version before use.

6.6 Supersession.

6.6.1 Superseded types and classes. Superseded types and classes are listed below:

a. Type A of MIL–P–50884B (the ability to withstand only one solder operation without degradation) was not addressed in previous revisions, but is addressed by rework capability grade U in this revision.

b. Type B of MIL–P–50884B (the ability to withstand five solder and unsoldering operation without degradation) was superseded by all printed wiring board types of MIL–P–50884C and MIL–P–50884D. It is addressed by rework capability grade R in this revision.

c. Class 1 of MIL–P–50884B was superseded by types 1, 2, and 5 of MIL–P–50884C and beyond.

d. Class 2 of MIL–P–50884B was superseded by types 3 and 4 of MIL–P–50884C and beyond.

6.6.2 Design, construction, and verification. Design, construction, and verification supersession information is included in appendix D of this document.

6.6.3 Reference to superseded specifications. All the requirements of this document can be interchangeable with those documents identified as MIL–P–50884. Therefore, existing documents (master drawings or OEM documents) referencing MIL–P–50884 need not be revised, updated, or changed to make reference to MIL–P–50884 in order for this document to be used.

6.7 Design standard. This document contains requirements and guidelines for the testing of printed wiring boards that were designed to and or make use of test coupons conforming to IPC–2221 and the flex and rigid-flex design details unique to IPC–2223. See appendix D for additional guidance regarding the verification of panels using different design standards.

6.8 Environmentally preferable material. Environmentally preferable material. Environmentally preferable materials should be used to the maximum extent possible to meet the requirements of this specification. As of the dating of this document, the U.S. Environmental Protection Agency (EPA) is focusing efforts on reducing 31 priority chemicals. The list of chemicals and additional information is available on their website http://www.epa.gov/osw/hazard/wastemin/priority.htm. Use of these materials should be minimized or eliminated unless needed to meet the requirements specified herein (see Section 3).

6.9 Subject term (key word) listing.

Design standard
Master drawing
Qualified Manufacturer List (QML)
Qualified Product List (QPL)
Test coupon
Product assurance program

6.10 Changes from previous issue. Marginal notations are not used in this revision to identify changes with respect to the previous issue due to the extensiveness of the changes.



Source: https://assist.dla.mil -- Downloaded: 2016-11-03T17:14Z
Check the source to verify that this is the current version before use.

# PRODUCT ASSURANCE (QUALIFICATION AND VERIFICATION) REQUIREMENTS FOR QUALIFIED PRODUCTS LIST PROGRAMS

## A.1. SCOPE

A.1.1 Scope. This appendix contains the requirements and procedures for manufacturers using the traditional Qualified Products List (QPL) method of product assurance (qualification and verification inspection) for printed wiring boards covered by this specification. The process for extending and retaining qualification is also herein. This appendix is a mandatory part of this specification for non-QML manufacturers. The information contained herein is intended for compliance.

## A.2. APPLICABLE DOCUMENTS

A.2.1 General. The documents listed in this section are specified in sections A.3 and A.4 of this specification. This section does not include documents cited in other sections of this specification or recommended for additional information or as examples. While every effort has been made to ensure the completeness of this list, document users are cautioned that they must meet all specified requirement documents cited in sections A.3 and A.4 of this specification, whether or not they are listed.

A.2.2 Non–Government publications. The following documents form a part of this document to the extent specified herein. Unless otherwise specified, the issues of these documents are those cited in the solicitation or contract.

ASTM INTERNATIONAL (ASTM)

| | | |
|---|---|---|
| ASTM B567 | – | Standard Test Method for Measurement of Coating Thickness by the Beta Backscatter Method. |
| ASTM B568 | – | Standard Test Method for Measurement of Coating Thickness by X-Ray Spectrometry. |

(Application for copies should be addressed to the ASTM International, 100 Barr Harbor Drive, P. O. Box C700, West Conshohocken, PA 19428-2959 or http://www.astm.org.)

IPC – ASSOCIATION CONNECTING ELECTRONICS INDUSTRIES (IPC)

| | | |
|---|---|---|
| IPC–2221 | – | Generic Standard on Printed Board Design. |
| IPC–2223 | – | Sectional Design Standard for Flexible Printed Boards. |
| IPC–A–600 | – | Acceptability of Printed Boards. |
| IPC–OI–645 | – | Standard for Visual Optical Inspection Aids. |
| IPC-TM-650 | – | Test Methods Manual. |
| IPC–7095 | – | Design and Assembly Process Implementation for BGAs. |
| IPC–9252 | – | Requirements for Electrical Testing of Unpopulated Printed Boards. |
| J–STD–003 | – | Solderability Tests for Printed Boards. |

(Application for copies should be addressed to the IPC – Association Connecting Electronics Industries (IPC), 3000 Lakeside Drive, Suite 309 S, Bannockburn, IL 60015-1249 or http://www.ipc.org.)

(Non-Government standards and other publications are normally available from the organizations that prepare or distribute the documents. These documents also may be available in or through libraries or other informational services.)

A.2.3 Order of precedence. Unless otherwise noted herein or in the contract, in the event of a conflict between the text of this document and the references cited herein, the text of this document takes precedence. Nothing in this document, however, supersedes applicable laws and regulations unless a specific exemption has been obtained.



Source: https://assist.dla.mil -- Downloaded: 2016-11-03T17:14Z
Check the source to verify that this is the current version before use.

A.3. REQUIREMENTS

A.3.1 General. The performance requirements contained in this section, although sometimes determined by examination of sampled printed wiring boards or test coupons, apply to all deliverable printed wiring boards.

A.3.1.1 Master drawing (see A.6.2.1.d). Printed wiring boards delivered under this specification shall be of the material, design, and construction specified on the applicable master drawing. For the purposes of this appendix, when the term "specified" is used without additional reference to a specific location or document, the intended reference shall be to the applicable master drawing. If individual design details are not specified on the applicable master drawing, then the baseline design parameters shall be as detailed in the design standard that was used to design the printed wiring board (see A.3.3).

A.3.2 Qualification. Printed wiring boards furnished under this specification shall be products that are authorized by the qualifying activity for listing on the applicable QPL at the time of award of contract (see A.4.5 and A.6.3). In addition, the manufacturer shall certify that the product assurance requirements of A.3.2.1 have been met and are being maintained.

A.3.2.1 QPL product assurance. The manufacturer shall establish and maintain a QPL product assurance system for products covered by this appendix. As a minimum, the QPL product assurance system shall be established and maintained in accordance with the requirements specified in A.3.2.1.1 and A.3.2.1.2.

A.3.2.1.1 Product assurance procedures. The manufacturer shall make available to the qualifying activity, a controlled procedure document defining its QPL product assurance system. As a minimum, the QPL product assurance procedures shall address the following information:

a. The in-process (see A.4.6.1) and group A (see A.4.6.2) verification and sampling procedures. If applicable, groups B (see A.4.7.1) and C (see A.4.7.2) verification procedures when groups B and C testing are performed at the manufacturing location. The applicable verification and sampling procedures shall address how the manufacturer implements the test methods referenced herein and how failed panels and printed wiring boards are handled.

b. The procedure for ensuring that the test coupons that represent the printed wiring board design on the production panel are available for in-process, groups A, B, and C testing as needed. The procedure shall cover test coupon design, quantity, and placement on a production panel, and identification marking of quality control test circuitry strips, individual test coupons, and microsection mounts (see appendix H).

c. The procedures addressing groups B and C verification testing when it is performed at an external certified suitable laboratory. The procedures shall address the methods used to select and submit groups B and C samples, for providing design details of the samples, and how test failures are handled. The manufacturer's definition of complexity (see A.4.7.1.1 and A.7.2) shall also be included in the group B procedure.

d. The procedures detailing the method the manufacturer will use for maintaining traceability as required herein. This procedure, as a minimum, shall include how the manufacturer assigns lot date codes, tracks the quality control test circuitry (QCTC) location on a panel, and test coupon location in multiple sample microsection mounts. In addition, the manufacturer shall have a method for authenticating the approval of certificates of conformance for printed wiring boards compliant to this specification.

e. The procedure detailing the method the manufacturer will use for creating and approving certificates of conformance (see 3.6).

Product assurance procedures that reflect the changes in this specification shall be made available to the qualifying activity prior to the end of the document and process conversion grace period (see the boxed note on cover page and 3.3.1).



Source: https://assist.dla.mil -- Downloaded: 2016-11-03T17:14Z
Check the source to verify that this is the current version before use.

A.3.2.1.2 Facility changes. The qualified manufacturer shall provide the qualifying activity written notice before any facility changes that affect the QPL product assurance program. Facility changes include the relocating of any production, inspection, processing facilities, or transferring work between different facilities. Any other facility changes which may affect product quality, reliability, or integrity are subject to the approval/disapproval by the qualifying activity. A change in ownership or a change in the individual designated as the management representative with respect to the manufacturer's QPL product assurance procedures and inspection system shall be construed as a facility change. The qualifying activity shall be notified within 28 days of any facility changes.

A.3.3 Design (see A.6.2.1.e). Printed wiring boards shall be of the design as specified. Unless otherwise specified (see A.3.1.1), if individual design details are not specified on the applicable master drawing, then the baseline design parameters to be used for acceptability of finished product requirements shall be as detailed in the design standard that was used to design the printed wiring board. If no design standard is specified on the master drawing or the appropriate design standard cannot be determined, then the default design shall be performance class 3 of IPC–2221 and IPC–2223.

A.3.3.1 Test coupons. Test coupon design shall be in accordance with the applicable design standard specified (see A.3.1.1) and herein. Test coupon placement and quantity on a production panel shall be in accordance with the requirements of appendix H. Test coupon selection and usage shall be determined by the manufacturer in order to meet the in-process, groups A, B, and C inspection requirements herein. NOTE: Test coupon design shall be as specified in the applicable design standard or herein, and shall reflect worst case design conditions of the printed wiring board(s) they represent.

A.3.4 Materials. The printed wiring boards shall be constructed of materials as specified (see A.3.1.1). When a definite material is not specified on the applicable master drawing, a material shall be used that will enable the printed wiring board to meet the performance requirements of this specification. Acceptance or approval of any material shall not be construed as a guaranty of the acceptance of the finished printed wiring board.

A.3.4.1 Pure tin. Unless otherwise specified (see A.3.1.1), the use of pure tin, as an underplate or final finish, is prohibited both internally and externally. Tin content of printed wiring board finishes and solder shall not exceed 97 percent, by mass. Tin shall be alloyed with a minimum of 3 percent lead, by mass (see A.6.8).

A.3.4.2 Recycled, recovered, or environmentally preferable materials. Recycled, recovered, or environmentally preferable materials should be used to the maximum extent possible, provided that the material meets or exceeds the operational and maintenance requirements, and promotes economically advantageous life cycle costs.



Source: https://assist.dla.mil -- Downloaded: 2016-11-03T17:14Z
Check the source to verify that this is the current version before use.

A.3.5 External visual and dimensional requirements. When examined in accordance with A.4.8.1, the finished printed wiring board shall meet the dimensional requirements specified in A.3.5.1 through A.3.5.9. Unless otherwise specified (see A.3.1.1), design related dimensional requirements specified in A.3.3, such as cutouts, overall thickness, periphery, and other features specified, shall be examined in accordance with A.4.8.1. Scratches, dents, and tool marks shall not bridge or expose signal conductors, expose base metal, expose or disrupt reinforcement fibers, reduce dielectric properties, and reduce spacing below the minimum requirements herein. Appendix F contains figures, illustrations, and photographs that can aid in the visualization of externally observable accept/reject conditions of printed wiring board test specimens.

A.3.5.1 Base material (flexible and rigid).

A.3.5.1.1 Edges of base materials.

A.3.5.1.1.1 Edges of flexible sections. Defects such as burrs, nicks, tears, or delamination, along the trimmed edges of flexible sections of printed wiring boards shall be acceptable provided the penetration does not reduce the edge spacing by more than 50 percent of the edge spacing specified (see A.3.1.1). Discoloration or resin recession along the trimmed edges of the flexible sections following the surface solderability test is acceptable providing the discoloration or resin recession dimension does not exceed the thickness of the adhesive material in the bonding area (when applicable) or reduce the edge spacing below the requirements of the master drawing.

A.3.5.1.1.2 Edges of rigid sections (types 4 and 5). Defects such as burrs, crazing, nicks, and haloing along the edges of printed wiring boards, including edges of cutouts and edges of non-plated-though holes, shall be acceptable provided the penetration does not reduce the edge spacing by more than 50 percent of the edge spacing specified (see A.3.1.1) or .10 inch (2.5 mm), whichever is smaller. If no requirement for edge spacing is specified (see A.3.1.1), the penetration shall not exceed .10 inch (2.5 mm). Inspection panels that are scored or partially routed with breakaway tabs for printed wiring board or test coupon removal shall meet the de-panelization requirements specified (see A.3.1.1).

A.3.5.1.1.3 Edges between flexible and rigid sections (see figure F–1). The edge of the rigid portion of a flexible to rigid junction shall define the transition between flexible and rigid portions of a printed wiring board. Unless otherwise specified (see A.3.1.1), the inspection range for a flexible to rigid junction shall be limited to .60 inch (1.5 mm) on either side of the transition. Imperfections along the flexible to rigid transition such as adhesive squeeze out, localized deformation of dielectric and conductors, protruding dielectric materials, crazing, or haloing not extending past the inspection range shall be acceptable.

A.3.5.1.2 Surface imperfections. Surface imperfections (such as scratches, pits, dents, surface microvoids, and weave texture) shall be acceptable providing the imperfection meets the following:

a. The base material reinforcement material (woven or non-woven fiber) is not cut or exposed.

b. The imperfection does not bridge between conductors (weave texture may bridge conductors).

c. The dielectric spacing between the imperfection and conductors does not reduce conductor spacing below the specified minimum requirements (see A.3.1.1).



Source: https://assist.dla.mil -- Downloaded: 2016-11-03T17:14Z
Check the source to verify that this is the current version before use.

A.3.5.1.3 Subsurface imperfections. Subsurface imperfections (such as blistering, haloing, and delamination) shall be acceptable providing the imperfection meets the following:

a. The imperfection is translucent.

b. The imperfection does not bridge more than 25 percent of the distance between conductors or plated-through holes. No more than two percent of the printed wiring board area on each side shall be affected.

c. The imperfection does not reduce conductor spacing between adjacent conductors below the minimum requirements specified (see A.3.1.1).

d. The imperfection does not propagate as a result of testing (such as rework simulation, resistance to soldering hear, or thermal shock).

e. Color variations or mottled appearance in bond enhancement treatments shall be acceptable. Random areas of missing bond enhancement treatment shall not exceed 10 percent of the total conductor surface area of the affected layer.

A.3.5.1.3.1 Foreign inclusions. Foreign inclusions shall be permitted when they meet the following:

a. The inclusion is trapped within the flexible portion of the printed wiring board.

b. The inclusion is located at least .010 inch (0.25 mm) from the nearest conductor.

c. The inclusion does not reduce the spacing between conductors below the minimum conductor spacing specified (see A.3.1.1). If not specified, the inclusion does not reduce the conductor spacing by more than 50 percent.

d. The inclusions longest dimension is no greater than .032 inch (0.81 mm) in circuitry areas. Inclusions in non-circuitry areas have no maximum dimension requirement.

e. When the base material specification allows for more or larger inclusions, those inclusions are allowed in the finished printed wiring board, up to the size and quantity defined by the base material specification provided that the inclusion does not violate the conductor spacing requirements of A.3.5.1.3.c.

A.3.5.1.3.2 Subsurface spots. Subsurface spots shall be permitted when they meet any of the following:

a. The spots are translucent.

b. The spots are known to be weave texture other than delamination or disbonding.

c. The spots are isolated white spots that are at least .010 inch (0.25 mm) from the nearest conductor or that do not propagate as a result of any soldering operation (gelation particles are acceptable regardless of location).

A.3.5.1.3.3 Adhesive voids (for metal clad flexible base materials only). Adhesive voids that are no greater than .020 inch (0.51 mm) or 25 percent of spacing shall be acceptable.

A.3.5.1.3.4 Measling and crazing. Measling and crazing shall not exceed the class 3 acceptable requirements specified in IPC–A–600, for bare printed wiring boards.



Source: https://assist.dla.mil -- Downloaded: 2016-11-03T17:14Z
Check the source to verify that this is the current version before use.

A.3.5.2 Conductor pattern.

A.3.5.2.1 Annular ring, external (see figure F–2 and figure F–3). The minimum external annular ring shall be as specified (see A.3.1.1). If not specified on the applicable master drawing, the minimum external annular ring shall not be less than the value specified in the IPC's 2220 series of documents for the design of flexible or rigid-flex printed wiring boards. On the date of publication of this document, the minimum external annular ring dimension was listed as .002 inch (0.051 mm) for plated through holes and .006 inch (0.152 mm) for unsupported holes. Unless otherwise specified, the external annular ring may have, in isolated areas, a 20 percent reduction of the minimum external annular ring specified, due to defects such as pits, dents, nicks, pinholes and extruded adhesive onto the land. Unless otherwise specified, plated-through holes identified as vias can have a maximum of 90 degrees of hole breakout if the breakout does not occur at the conductor to land intersection.

A.3.5.2.2 Conductor spacing. The conductor spacing shall be as specified (see A.3.1.1). The minimum edge spacing (the spacing between the edge of the printed wiring board and conductors) shall be as specified. Unless otherwise specified, if no conductor spacing tolerance is specified, a reduction in the conductor spacing of 10 percent above the specified spacing, due to isolated defects or misregistration, shall be considered acceptable.

A.3.5.2.3 Conductor width. The conductor width(s) shall be as specified (see A.3.1.1). Allowable reduction in the conductor width, due to isolated defects or misregistration, shall be in accordance with A.3.5.2.4.

A.3.5.2.4 Conductor pattern imperfections (see figure F–4 and figure F–5). The conductor pattern shall contain no cracks, splits or tears. Unless otherwise specified, any combination of edge roughness, nicks, pinholes, cuts, or scratches exposing the base material shall not reduce non-critical conductors width by more than 20 percent of its minimum specified width. There shall be no occurrence of the 20 percent width reductions greater than .50 inch (12.70 mm) or 10 percent of a signal conductor length, whichever is less.

A.3.5.2.4.1 Cuts and scratches. A cut or scratch of any length or width is permissible on ground or voltage planes, provided the dielectric is not exposed. Cuts and scratches on non-critical conductors may be of any length, but no deeper than 20 percent of the total conductor thickness.

A.3.5.2.4.2 Dents. A dent of any length or width on ground planes shall be acceptable provided the clad surface is not torn. Dents on conductive patterns may be of any length, but no deeper than .0005 inch (0.013 mm).

A.3.5.2.4.3 Pinholes. Pinholes in ground or voltage planes in non-critical areas shall be acceptable provided they have no single diameter greater than .040 inch (1.0 mm) and do not exceed four for each 1.0 inch (25.4 mm) diameter. Pinholes in a conductive pattern shall be acceptable, provided they do not reduce the width of a conductive pattern by 10 percent and do not exceed one for each 1.0 inch (25.4 mm ) of a conductor length.

A.3.5.2.4.4 Pits. Pits in ground or voltage planes shall be acceptable provided they do not exceed 25 percent of the surface area. Any pit in the conductive pattern is acceptable provided the outline dimension does not exceed 10 percent of the conductor width, and there is no more than one pit for each 1.0 inch (25.4 mm) of the conductor length.

A.3.5.2.4.5 Superfluous metal. Unless otherwise specified, small particles of metal, such as residual copper or subsequent plating after etching, which remain affixed to areas that are intended to be free of conductive material shall be acceptable providing the following conditions are met:

a. The superfluous metal is no closer than .25 inch (6.4 mm) to any conductor.

b. The superfluous metal is smaller than .005 inch (0.13 mm) at their greatest diameter.



Source: https://assist.dla.mil -- Downloaded: 2016-11-03T17:14Z
Check the source to verify that this is the current version before use.

A.3.5.2.5 Conductor finish. The conductor finish shall be as specified. Unless otherwise specified, the following requirements shall apply.

A.3.5.2.5.1 Coverage. The conductor finish plating or coating shall cover the basis metal of the conductive pattern. Coverage of a conductor by solder does not apply to the vertical conductor edges. There shall be no evidence of any lifting or separation of conductor finish plating or coating from the surface of the conductive pattern.

A.3.5.2.5.1.1 Conductor finish plating and coating voids in plated-through holes. The conductor finish plating and coating shall not have voids in plated-through holes that exceed the following limits:

a. No more than one final finish void in any plated-through hole.

b. Not more than 5 percent of the plated-through holes shall have conductor finish voids.

c. Any conductor finish void present is not more than 5 percent of the plated-through holes length.

d. Any conductor finish void present is less than 90 degrees of the circumference of the plated-through hole.

A.3.5.2.5.1.2 Edge board contacts. Unless otherwise specified, these requirements apply to the critical contact area. The critical contact area for edge board contacts shall be as specified.

a. Defects or surface imperfections in the edge board contact finish shall not expose base metal in critical contact area.

b. There shall be no nodules or metal bumps in the edge board contact finish in the critical contact area.

c. Pits, dents, or depressions in the edge board contact finish shall not exceed .0059 inch (0.15 mm) in their longest dimension. There shall be no more than three occurrences for each edge board contact, and no more than 30 percent of the contacts shall be affected.

A.3.5.2.5.1.3 Plating junctions (typical of edge board contacts). There shall be no exposed copper in the junction of metallic platings or coatings. An overlap of metallic platings or coatings shall be acceptable if less than .032 inch (0.8 mm) in length. When both solder coating and gold plating are present at a plating junction, a discolored or gray-black area at that plating overlap zone shall be acceptable.

A.3.5.2.5.1.4 Solder mask. For designs using solder mask over bare conductors, it shall be acceptable to have up to .010 inch (0.25 mm) of exposed base metal at the interface between the solder mask and the basis metal conductor finish.

A.3.5.2.5.2 Whiskers. There shall be no whiskers of solder or other platings on the surface of the conductive pattern.



Source: https://assist.dla.mil -- Downloaded: 2016-11-03T17:14Z
Check the source to verify that this is the current version before use.

A.3.5.2.6 Component mounting. Imperfections on surface mount lands or wire bond pads shall not exceed the requirements specified herein.

A.3.5.2.6.1 Rectangular surface mount lands (see figure F–6). Defects such as nicks, dents, and pin holes along the external edge of the land shall not exceed 20 percent of either the length or width of the land and shall not encroach the pristine area, which is defined by the central 80 percent of the land width by 80 percent of the land length as shown on figure F–6. Defects internal to the land shall not exceed 10 percent of the length or width of the land and shall remain outside of the pristine area of the surface mount land. Electrical test probe ‘‘witness’’ marks are allowed within the pristine area.

A.3.5.2.6.2 Round surface mount lands (BGA pads) (see figure F–7). Defects such as nick, dents and pin holes along the edge of the land shall not radially extend towards the center of the land by more than 10 percent of the diameter of the land and shall not extend more than 20 percent around the circumference of the land as shown on figure F–7. There shall be no defects within the pristine area which is defined by the central 80 percent of the land diameter. Electrical test probe ‘‘witness’’ marks are allowed within the pristine area.

A.3.5.2.6.3 Wire bond pads. The maximum conductor finish roughness (surface roughness) for pads or areas designated for wire bonding shall be no greater than 32 micro inches (0.8 micrometers). Unless otherwise specified, the wire bond pad bonding area shall be defined as the pristine area as shown on figure F–6 for rectangular pads or figure F–7 for round pads. There shall be no pits, nodules, scratches, electrical test probe ‘‘witness’’ marks, or other defects in the pristine area that exceed the surface roughness limits.

A.3.5.3 Coverlayer (including coverfilm and cover coat). Unless otherwise specified, the requirements specified in A.3.5.3.1 through A.3.5.3.6 shall apply to coverlayers, coverfilms, and cover coats. When the term coverlayer is used herein, it also applies to both coverfilms and cover coats.

A.3.5.3.1 Coverage. Coverlayer coverage imperfections (such as blisters, pits, skips, and voids) shall be acceptable providing the imperfection complies with the following:

a. The coverlayer imperfection shall not bridge by blisters or expose isolated conductors whose spacing is less than the electrical spacing required for the voltage range and environmental condition specified in the applicable design standard.

b. In areas containing parallel conductors, the coverlayer imperfection shall not expose isolated conductors whose spacing is less than .020 inch (0.5 mm) unless one of the conductors is a test point or other feature area which is purposely left uncoated for subsequent operations.

c. The exposed conductor shall not be bare copper.

d. The coverlayer imperfection does not expose plated holes or via holes that are to be tented or filled by coverlayer.

e. Blisters in the coverlayer shall not exceed the following: Two for each side, maximum size .010 inch (0.25 mm) in longest dimension, does not reduce electrical spacing between conductors by more than 25 percent.

f. Pits and voids in non-conductor areas shall be acceptable provided they have adherent edges and do not exhibit lifting or blisters in excess of that allowed in A.3.5.3.1.e.

g. The coverlayer may tent or plug via holes as specified (see A.3.1.1). Coverage between closely spaced surface mount lands shall be as specified.



Source: https://assist.dla.mil -- Downloaded: 2016-11-03T17:14Z
Check the source to verify that this is the current version before use.

A.3.5.3.2 Delamination (see figure F–8). The coverlayer shall be uniform and free of delaminations, such as creases, soda strawing, and wrinkles. Coverlayer delamination or non–lamination shall be acceptable, providing such imperfections do not violate A.3.5.1.3.1 and the following conditions are met:

a. At random locations away from conductors if each delamination is no larger than .01 square inch (6.45 square mm) and is not within .040 inch (1.0 mm) of the printed wiring board edge or coverlayer access hole or opening. The total number of the above delaminations shall not exceed three in any 1 square inch (645 square mm) of coverlayer surface area.

b. Along conductor edges, the total delamination does not exceed either .02 inch (0.51 mm) in width or 20 percent of the spacing between adjacent conductors, whichever is smaller.

c. When design requires coverage to the edge of flexible sections; chipping, delamination, lifting, or separation of the coverlayer along the edge of flexible sections shall not penetrate more than .05 inch (1.3 mm) or 50 percent of the distance to the closest conductor, whichever is less.

d. There shall be no coverlayer delamination along the outer edges of the coverlayer or openings of the coverlayer that reduces the seal below minimum edge to conductor spacing (see A.3.5.1.1).

e. There shall be not more than 3 coverlayer delaminations that exceeds 1.0 square inch (25.4 square mm) in surface area.

A.3.5.3.2.1 Wrinkles or creases. Wrinkles or creases in the coverlayer shall be acceptable provided the requirements of A.3.5.3.2 are met.

A.3.5.3.2.2 Continuous flex designs (installation use B). After exposure to the flexibility endurance test (see A.3.7.4.7 and A.4.8.4.7), there shall be no propagation of any coverlayer separation or delamination in the continuous flex area for installation use B designs.

A.3.5.3.3 Cover coat cure. The cured cover coat shall not exhibit tackiness and blistering or delamination shall not be in excess of that allowed in A.3.5.3.1 or A.3.5.3.2.

A.3.5.3.4 Registration (see figure F–9). The coverlayer shall be registered to the land or terminal patterns in such a manner as to meet the requirements specified (see A.3.1.1). If a clearance is specified, no encroachment of the coverlayer on the land is allowed, except at the conductor attachment. If no registration requirements are specified, the following shall apply:

a. For plated-through holes and vias, the following shall apply:

(1) Coverlayer misregistration (including squeeze-out or ooze-out) onto plated-through component hole lands (plated-through holes to which solder connections are to be made) shall not reduce the external annular ring below the specified minimum requirements. The requirements of A.3.5.3.1.a and A.3.5.3.1.b shall also be met.

(2) Coverlayer shall not encroach into plated-through hole barrels or onto lands of unsupported holes to which solder connections will be made.

(3) Unless specified to be solder filled, coverlayer is permitted in plated holes or vias in which no lead is to be soldered.



Source: https://assist.dla.mil -- Downloaded: 2016-11-03T17:14Z
Check the source to verify that this is the current version before use.

b. For surface mount lands with no plated-through holes, the following shall apply:

(1) For lands with a pitch of .050 inch (1.27 mm) or greater, coverlayer encroachment is on one side of land only and does not exceed .002 inch (0.050 mm).

(2) For lands with a pitch less than .050 inch (1.27 mm), coverlayer encroachment shall not exceed .001 inch (0.025 mm). The encroachment can occur on adjacent sides, but not on opposite sides of the land.

c. For ball grid array lands, the following shall apply:

(1) If the BGA land is coverlayer defined, allowable misregistration of the coverlayer causes breakout of the land of not more than 90 degrees.

(2) If the BGA land is copper defined, the coverlayer shall not encroach onto the land. Coverlayer on the land-to-via connecting conductor shall be acceptable.

(3) If the BGA land is connected to a via and a coverlayer dam is specified, the dam shall remain in place and be continuous over the conductor to the via (no cracked, peeling, or missing coverlayer).

d. Edge-board contacts and test points which are intended for assembly testing shall be free of coverlayer unless a partial coverage allowance is specified.

e. Coverlayer shall not encroach into plated-through hole barrels or onto other surface features such as connector fingers, test points, or lands of unsupported holes to which solder connections will be made.

f. Covercoat need not be flush with the surface of the land. Misregistration of a covercoat-defined feature shall not expose adjacent isolated lands or conductors.

A.3.5.3.5 Thickness. The coverlayer thickness shall be as specified (see A.3.1.1).

A.3.5.3.6 Wicking of plated metals or solder (see figure F–10). The wicking of plating metals or solder shall not extend into a bend or flex transition area and shall meet the conductor spacing requirements. When wicking under coverlayers is present in non-bend or flex transition areas, the penetration of plated metals or solder shall not exceed .012 inch (0.3 mm).

A.3.5.4 Dimensions of features. The finished printed wiring boards shall meet the interface and physical dimensions specified (see A.3.1.1). The dimensional requirements includes items such as cutouts, overall thickness, periphery, and other design features as specified. In the event that a dimensional characteristics is not specified, the applicable class 3 of IPC–2221 design default for that characteristic shall apply.

A.3.5.4.1 Hole pattern accuracy. The accuracy of the hole pattern (size and location) on the printed wiring board shall be as specified (see A.3.1.1).

A.3.5.4.2 Ball grid array (BGA) lands. BGA lands using copper–defined lands, solder mask-defined lands, or solder dam designs shall comply with IPC–7095.

A.3.5.5 Lifted lands and bonding of conductor to base material. There shall be no lifted lands on the deliverable printed wiring board. There shall be no peeling or lifting of the conductive pattern (lands or conductors) from the base material. (NOTE: See A.3.6.6 for allowances for the acceptable lifting of lands following the rework simulation, resistance to soldering heat, and thermal shock testing.)

A.3.5.6 Registration, external (method I). Misregistration shall not reduce the minimum external annular ring below the limits specified (see A.3.1.1).



Source: https://assist.dla.mil -- Downloaded: 2016-11-03T17:14Z
Check the source to verify that this is the current version before use.

A.3.5.7 Solder mask (when applicable). The cured solder mask shall not exhibit any chalking, crazing, peeling, skipping, softening, swelling, wicking, or wrinkles in excess of the limits specified herein. Unless otherwise specified (see A.3.1.1), the solder mask requirements specified in A.3.5.7.1 through A.3.5.7.5 shall apply.

A.3.5.7.1 Coverage. Solder mask coverage imperfections (such as blisters, skips, and voids) shall be acceptable providing the imperfection meets all of the following:

a. The solder mask imperfection shall not expose two adjacent conductors whose spacing is less than the electrical spacing required for the voltage range and environmental condition specified in the applicable design standard.

b. In areas containing parallel conductors, the solder mask imperfection shall not expose two isolated conductors whose spacing is less than .020 inch (0.5 mm) unless one of the conductors is a test point or other feature area which is purposely left uncoated for subsequent operations.

c. The exposed conductor shall not be bare copper.

d. The solder mask imperfection does not expose-via holes that are required to be tented.

e. Pits or voids in non-conductor areas shall be acceptable if they do not exhibit blistering or lifting in excess of that allowed in A.3.7.4.8.

A.3.5.7.2 Discoloration. Discoloration of metallic surfaces under the cured solder mask is acceptable.

A.3.5.7.3 Registration (see figure F–11 and figure F–12). The solder mask shall be registered to the land or terminal patterns in such a manner as to meet the requirements specified (see A.3.1.1). If no requirements are specified, the following apply:

a. For plated-through holes and vias, the following shall apply:

(1) Solder mask misregistration onto plated-through component hole lands (plated-through holes to which solder connections are to be made) shall not reduce the external annular ring below the specified minimum requirements.

(2) Solder mask shall not encroach into plated-through hole barrels or onto other surface features (such as edge board contacts, or lands of unsupported holes) to which solder connections will be made.

(3) Solder mask is permitted in plated holes or vias in which no lead is to be soldered.

b. For surface mount lands with no plated-through holes, the following shall apply:

(1) For lands with a pitch of .050 inch (1.27 mm) or greater, solder mask encroachment is on one side of land only and does not exceed .002 inch (0.050 mm).

(2) For lands with a pitch less than .050 inch (1.27 mm), solder mask encroachment is on one side of land only and does not exceed .001 inch (0.025 mm).



Source: https://assist.dla.mil -- Downloaded: 2016-11-03T17:14Z
Check the source to verify that this is the current version before use.

c. For ball grid array lands, the following shall apply:

(1) If the land is solder mask defined, allowable misregistration of the solder mask causes breakout of the land of not more than 90 degrees.

(2) If the land is copper defined, the solder mask shall not encroach onto the land. Solder mask on the land-to-via connecting conductor shall be acceptable.

(3) If solder mask dam is specified, the dam remains in place with the conductor to the via covered.

d. Edge-board contacts and test points which are intended for assembly testing shall be free of solder mask unless a partial coverage allowance is specified.

A.3.5.7.4 Solder mask cure. The cured solder mask coating shall not exhibit tackiness, blistering, or delamination.

A.3.5.7.5 Thickness. The solder mask thickness shall be as specified (see A.3.1.1).

A.3.5.8 Stiffeners.

A.3.5.8.1 Bonding. Complete bonding of the stiffener to the flexible portion of the printed wiring board is not required (see A.6.13). Unless otherwise specified (see A.3.1.1), the bonding of the stiffener to the flexible portion of the printed wiring board shall be 50 percent minimum.

A.3.5.8.2 Foreign material between the stiffener and printed wiring board surface. Foreign material determined to be located between stiffener and printed wiring board surface shall be acceptable provided the bulge of non-conductive foreign material is no larger than .004 inch (0.1 mm). The foreign material shall not be larger than 5 percent of the bonding area of the stiffener. The foreign material shall not encroach onto the land of any component hole.

A.3.5.8.3 Stiffener access hole registration. Stiffener access hole registration shall be such that the size or diameter of the access hole shall not reduce the component land area or minimum annular ring below the limits specified (see A.3.5.2.1).

A.3.5.9 Wicking of metallic conductor surface finish materials (see figure F–10). Wicking of metallic conductor surface finish materials (coatings, platings, or solder) extending .010 inch (0.25 mm) into the base material shall be acceptable provided it does not reduce the conductor spacing below the minimum clearance spacing requirements specified (see A.3.1.1).

A.3.6 Plated hole structural requirements. When examined by microsection, the plated holes of the microsectioned test specimen (which includes plated-through holes, blind vias, buried vias, low aspect ratio blind vias, and microvias) shall meet the requirements of A.3.6.1 through A.3.6.10. If not specified on the applicable master drawing (see A.3.1.1) or herein, the requirements of A.3.3 shall be met. Barrel cracks, butt plating joints, circumferential separations, corner cracks, and cracked copper plating shall not be acceptable. Appendix G contains figures, illustrations, and photographs that can aid in the visualization of internally observable accept/reject conditions of microsectioned test specimens.

A.3.6.1 Base material. Unless otherwise specified, the base material imperfections listed in A.3.6.1.1 through A.3.6.1.8 shall be acceptable.

A.3.6.1.1 Adhesive voids (for metal clad flexible base materials only) (see figure G–1).

A.3.6.1.1.1 Non-stressed specimens (as received condition). Adhesive voids with the longest dimension of .020 inch (0.51 mm) or less shall be acceptable. Multiple adhesive voids in the same plane between adjacent plated holes shall not have a combined length which exceeds .020 inch (0.51 mm).



Source: https://assist.dla.mil -- Downloaded: 2016-11-03T17:14Z
Check the source to verify that this is the current version before use.

A.3.6.1.1.2 Stressed specimens (after rework simulation, resistance to soldering heat, or thermal shock). Adhesive voids are not evaluated in zone A. Adhesive voids in zone B with the longest dimension of .020 inch (0.51 mm) or less shall be acceptable provided the conductor spacing is not reduced below the minimum dielectric spacing requirements specified (see A.3.1.1)

A.3.6.1.2 Base material cracks and voids (see figure G–1).

A.3.6.1.2.1 Non-stressed specimens (as received condition). Laminate voids with the longest dimension of .003 inch (0.08 mm) or less shall be acceptable.

A.3.6.1.2.2 Stressed specimens (after rework simulation, resistance to soldering heat, or thermal shock). Laminate cracks and voids are not evaluated in zone A. Laminate cracks located wholly in zone A shall be acceptable. Laminate cracks and voids that originate in zone A and encroach into zone B shall not exceed a length of .003 inch (0.08 mm). Laminate cracks and voids in zone B shall not exceed a length of .003 inch (0.08 mm), shall not bridge adjacent uncommon conductors, and shall not reduce dielectric spacing, either laterally or vertically, below the minimum specified spacing. Multiple laminate cracks and voids located between two adjacent plated-through holes shall not have a combined length in excess of .003 inch (0.08 mm), shall not bridge adjacent uncommon conductors, and shall not reduce dielectric spacing, either laterally or vertically, below the minimum specified spacing.

A.3.6.1.3 Coverlayer thickness. Unless otherwise specified (see A.3.1.1), the thickness of the coverlayer shall not be measured.

A.3.6.1.4 Delamination. Printed wiring boards shall have no delaminations in excess of that allowed in A.3.5.1.3.

A.3.6.1.5 Dielectric layer thickness (see figure G–2). The minimum dielectric thickness separating the conductor layers of the printed wiring boards shall be as specified (see A.3.1.1). If not specified on the applicable master drawing, the minimum dielectric spacing for rigid, or rigid and flex base materials, should not be less than the value specified in the IPC's 2220 series of documents for the design of flexible or rigid-flex printed wiring boards. On the date of publication of this document, the minimum dielectric spacing dimension for rigid base materials was listed as .0035 inch (0.089 mm), and when the dielectric material between conductor layers is composed of both rigid and flexible base materials, the minimum dielectric was listed as .0015 inch (0.038 mm).

A.3.6.1.6 Metal plane hole fill insulation material (see figure G–3 and G–4). Radial cracks, lateral spacing, wicking, or voids in the dielectric material used to insulate the heat sink plane or metal core from circuitry and plated through holes shall not reduce by 75 percent the specified lateral spacing between adjacent conductive surfaces. Unless otherwise specified (see A.3.1.1), the minimum lateral spacing between adjacent conductive surfaces, nonfunctional lands, or plated-through hole and the heat sink plane shall be .004 inch (0.102 mm) or 50 percent of the specified spacing, whichever is less.

A.3.6.1.7 Hole wall to dielectric separation (resin recession) (see figure G–1).

A.3.6.1.7.1 Non-stressed specimens (as received condition). Any separation between the vertical edge of the dielectric material and the outer surface of the plated hole barrel wall shall be permitted provided the maximum depth as measured from the barrel wall does not exceed .003 inch (0.08 mm) and the dielectric separation on any side of the plated-through hole does not exceed 40 percent of the cumulative base material thickness (sum of the dielectric layer thickness being evaluated) on the side of the plated-through hole being evaluated.

A.3.6.1.7.2 Stressed specimens (after rework simulation, resistance to soldering heat, or thermal shock). Resin recession at the outer surface of the plated hole barrel shall be permitted and is not cause for rejection.

A.3.6.1.8 Via fill of blind and buried vias. Unless otherwise specified (see A.3.1.1), blind vias shall be at least 75 percent filled with the via fill material (laminating resin or similar via filling material). Unless otherwise specified, buried vias shall be at least 95 percent filled with the via fill material.



Source: https://assist.dla.mil -- Downloaded: 2016-11-03T17:14Z
Check the source to verify that this is the current version before use.

A.3.6.2 Conductor finish. A conductor finish plating or coating material shall be used that enables the printed wiring board to meet all of the performance requirements of this specification. Unless otherwise specified (see A.3.1.1), the following conductor finish condition requirements shall apply.

A.3.6.2.1 Dewetting. For tin alloys, reflowed tin-lead, or solder coated surfaces, a maximum of 5 percent of dewetting is permitted on any conductive surface where a solder connection will be required. Dewetting on conductors, ground, or voltage planes not used for solder connections shall meet the requirements of J–STD–003.

A.3.6.2.2 Nonwetting. For tin alloys, reflowed tin-lead, solder coated surfaces, nonwetting is not permitted on any conductive surface where a solder connection will be required. Absence of solder on the vertical sides of lands shall be acceptable.

A.3.6.2.3 Outgrowth and overhang. There shall be no outgrowth on the conductor edges when finished with fused tin-lead or solder coating. The maximum permissible outgrowth on conductor edges finished with surface finish metals other than tin-lead or solder shall be .001 inch (0.025 mm).

A.3.6.2.4 Protective finishes for internal metal cores or metal backing. The plating, coating, or surface treatment type and thickness of internal metal cores and metal backing materials shall be as specified (see A.3.1.1).

A.3.6.2.5 Thickness (plating or coating). The conductor finish plating or coating thickness shall be as specified (see A.3.1.1). If not specified on the applicable master drawing, the minimum conductor finish plating or coating thickness should not be less than the values specified in the IPC's 2220 series of documents for the design of flexible or rigid-flex printed wiring boards. On the date of publication of this document, those values are reproduced in table A–I. (Also see A.3.5.2.6).

A.3.6.3 Conductor thickness. The conductor thickness shall be as specified (see A.3.1.1).

A.3.6.3.1 Conductors with copper plating (after processing). When a conductor thickness is specified, the conductor thickness (metal foil and copper plating) shall be equal to or greater than the specified thickness. When a conductor thickness with tolerance is specified, the conductor thickness (metal foil and copper plating) shall be within the specified tolerance for the specified thickness. If only a starting metal foil weight requirement is specified, the thickness limits for conductors with plating shall meet the requirements of table A–II. If only final metal foil weight requirement is specified, the limits for minimum conductor thickness shall be as defined by the procuring activity.
NOTE: Conductors with copper plating are typical of external layers of multilayer designs and internal layers of sequential laminated multilayer designs.



Source: https://assist.dla.mil -- Downloaded: 2016-11-03T17:14Z
Check the source to verify that this is the current version before use.

TABLE A–I. Conductor surface finish plating and coating thickness.

| Material | | Thickness, in inches (mm) |
|---|---|---|
| Gold (electroplated) for edge-board contacts and areas not to be soldered | | .00005 (0.0013 mm) minimum |
| Gold (electroplated) for areas to be soldered | | .000018 (0.00046 mm) maximum |
| Gold (electroplated) for areas to be wire bonded, ultrasonic | | .000002 (0.00005 mm) minimum |
| Gold (electroplated) for areas to be wire bonded, thermosonic | | .00003 (0.0008 mm) minimum |
| Nickel (electroplated); under gold areas to be wire bonded | | .00012 (0.003 mm) minimum |
| Nickel (electroplated); edge-board contacts | | .00008 (0.002 mm) minimum |
| Nickel (electroplated); barrier to prevent formation of Cu-Sn compounds | | .00005 (0.0013 mm) minimum |
| Organic solderability preservative (OSP) | | Solderable |
| Immersion silver | | Solderable |
| Electrodeposited tin-lead, fused or solder coat | | Coverage and solderable |
| Electrodeposited tin-lead, unfused | | .0003 (0.008 mm) minimum |
| Solder coat over base copper | | Coverage and solderable |
| ENIG | Electroless nickel | .00012 (0.003 mm) minimum |
| | Immersion gold (areas not to be soldered) | .000002 (0.00005 mm) minimum |
| | Immersion gold (areas to be soldered) | Solderable |

TABLE A–II. Thickness of conductors with copper plating (after processing).

| Starting copper foil weight 1/ | Processing reduction allowance 2/ inches (µm) | Minimum conductor thickness after processing | | |
|---|---|---|---|---|
| | | Type 2 ≤ .008 (0.2 mm) inches (µm) | Types 3 and 4 > .008 and ≤ .030 (0.2 and 0.76 mm) inches (µm) | Type 3 and 4 > .030 (0.76 mm) inches (µm) |
| 1/8 | .00006 (1.5) | .000621 (15.78) | .001121 (28.473) | .001521 (38.633) |
| 1/4 | .00006 (1.5) | .000743 (18.87) | .001243 (31.572) | .001643 (41.732) |
| 3/8 | .00006 (1.5) | .000865 (21.97) | .001365 (34.671) | .001765 (44.831) |
| 1/2 | .00008 (2.0) | .001026 (26.06) | .001526 (38.760) | .001926 (48.920) |
| 1 | .00012 (3.0) | .001597 (40.56) | .002097 (53.263) | .002497 (63.423) |
| 2 | .00012 (3.0) | .002809 (71.35) | .003309 (84.048) | .003709 (94.208) |
| 3 | .00016 (4.0) | .003986 (101.2) | .004486 (113.944) | .004886 (124.104) |
| 4 | .00016 (4.0) | .005202 (132.1) | .005702 (144.830) | .006102 (154.990) |

1/ The starting copper foil weight is as specified on the master drawing.
2/ The processing reduction allowance does not factor in any rework processing for copper foil weights below 1/2. For weights of 1/2 and above, the processing reduction allowance accounts for one rework process.



Source: https://assist.dla.mil -- Downloaded: 2016-11-03T17:14Z
Check the source to verify that this is the current version before use.

A.3.6.3.2 Conductors without copper plating (after processing). When a minimum conductor thickness is specified, the conductor thickness (metal foil only) shall be equal to, or greater than, the specified thickness. When a conductor thickness with tolerance is specified, the conductor thickness (metal foil only) shall be within the specified tolerance for the specified thickness. For wrought or rolled metal foil types, if only a starting metal foil weight requirement is specified, a reduction in thickness up to 5 percent below the minimum allowable foil thickness specified by the applicable material specification shall be considered acceptable in order to accommodate a processing allowance for cleaning either by chemical or mechanical means. For deposited metal foil types, if only a starting metal foil weight requirement is specified, the limits for minimum internal layer foil thickness after processing shall be in accordance with table A–III. If only final metal foil weight requirement is specified, the limits for minimum conductor thickness shall be as defined by the procuring activity.

TABLE A–III. Thickness of conductors without copper plating (after processing).

| Starting copper foil weight | Processing reduction allowance<br>inches (µm) | Minimum surface conductor thickness (after processing)<br>Inches (µm) |
|---|---|---|
| 1/8 | .00006 (1.5) | .00012 (3.048) |
| 1/4 | .00006 (1.5) | .00024 (6.096) |
| 3/8 | .00006 (1.5) | .00037 (9.398) |
| 1/2 | .00016 (4.0) | .00045 (11.43) |
| 1 | .00024 (6.0) | .00098 (24.892) |
| 2 | .00024 (6.0) | .00219 (55.6) |
| 3 | .00024 (6.0) | .00341 (86.6) |
| 4 | .00024 (6.0) | .00463 (117.6)) |

A.3.6.4 Conductor width. The conductor width shall be as specified (see A.3.1.1).

A.3.6.4.1 Annular ring, internal (see figure G–5). The minimum annular ring for functional internal lands on types 3 and 4 printed wiring boards shall be as specified (see A.3.1.1). If not specified on the applicable master drawing, the minimum internal annular ring should not be less than the values specified in the IPC's 2220 series of documents for the design of flexible or rigid-flex printed wiring boards. On the date of publication of this document, that value was listed as .002 inch (0.051 mm).

A.3.6.4.2 Undercutting. Undercutting at each edge of the conductors shall not exceed the total thickness of the copper foil and plated copper.

A.3.6.5 Hole preparation prior to metallization. The presence of both flexible and rigid base materials in type 4 designs will cause varying degrees of etchback amongst the various base materials in the finished plated-through hole. In addition, all designs that make use of adhesiveless flexible base material will typically exhibit minimal etchback at the flexible dielectric to copper conductor interface.

A.3.6.5.1 Desmear (hole cleaning) (see figure G–6). When etchback is not specified on the applicable master drawing, the vertical faces of the internal conductors of the plated-through holes shall be cleaned to be free of resin smear. Lateral removal of base material from the hole wall shall not exceed .001 inch (0.03 mm). When desmear is used for hole preparation, a negative etchback of .0005 inch (0.013 mm) maximum shall be acceptable.



Source: https://assist.dla.mil -- Downloaded: 2016-11-03T17:14Z
Check the source to verify that this is the current version before use.

A.3.6.5.2 Etchback (when specified, see A.3.1.1) (see figure G–7 and G–8). When specified (see A.3.1.1), holes shall be processed for the lateral removal of resin and reinforcement material (woven glass or other media) from the internal conductors prior to plating. Unless otherwise specified (see A.3.1.1), etchback shall be a minimum of .0001 inch (0.0025 mm) and no greater than the specified minimum internal annular ring or .002 inch (0.05 mm), whichever is less, with a preferred depth of .0005 inch (0.013 mm) when measured at the internal copper contact area protrusion (see figure G–7). The etchback shall be effective on at least the top or bottom (or both) surface of each internal conductor to provide at least a two (2) point contact with the subsequent hole plating (see figure G–8). Negative etchback is not acceptable when etchback is specified. Wicking shall meet the requirements of A.3.6.7.5.

A.3.6.6 Lifted lands (see figure G–9).

A.3.6.6.1 Non-stressed specimens (as received condition). There shall be no lifted lands, or evidence of lifted lands on the as received microsectioned test specimen. When inspected in accordance with A.4.8.2 and lifted lands are present, the lot shall be 100 percent visually inspected in accordance with A.4.8.1 for separation of the lands from the base material.

A.3.6.6.2 Stressed specimens (after rework simulation, resistance to soldering heat, or thermal shock). After undergoing rework simulation, resistance to soldering heat, or thermal shock testing (see A.3.7.4.6, A.3.7.6.2, and A.3.7.6.3), the maximum allowed distance from the base material surface to the bottom of the edge of the land or pad shall be no greater than the total land thickness. The total land thickness is equal to the combined thickness of the metal foil and copper plating on that land.

A.3.6.7 Plated-through hole plating. Unless otherwise specified (see A.3.1.1), copper plating thickness applies to the hole wall, the hole knee, and the surface land of the plated-through hole (see figure G–10).

A.3.6.7.1 Copper plating thickness (when applicable) (see figure G–10, figure G–11, and figure G–12). The copper plating thickness (on the surface, in plated-through holes, in blind and buried vias) shall be as specified (see A.3.1.1). If not specified on the master drawing, the minimum copper plating thickness should not be less than the values specified in the IPC's 2220 series of documents for the design of flexible or rigid-flex printed wiring boards. On the date of publication of this document, those values are reproduced in table A–IV for plated through holes and table A–V for blind and buried vias. Unless otherwise specified, the minimum wrap copper plating thickness shall not be reduced by more than 50 percent of the specified copper plating thickness due to planarization or other processing.

TABLE A–IV. Plated-through hole copper plating thickness.

| Plating | Type 2<br>inch (mm) | Types 3 and 4<br>inch (mm) | Type 3 and 4<br>inch (mm) |
|---|---|---|---|
| Overall board thickness | ≤ .008 (0.2) | > .008 and ≤ .030 (0.2 and 0.76) | >.030 (0.76) |
| Minimum average | .0005 (0.013) | .001 (0.025) | .0014 (0.035) |
| Minimum thin area | .0004 (0.010) | .0008 (0.020) | .0012 (0.030) |
| Minimum wrap copper plating | | .0005 (0.013) | .0007 (0.019) |



Source: https://assist.dla.mil -- Downloaded: 2016-11-03T17:14Z
Check the source to verify that this is the current version before use.

TABLE A–V. Blind and buried via copper plating thickness.

| Via design characteristic | Minimum average inch (mm) | Minimum thin area inch (mm) | Minimum wrap copper plating inch (mm) |
|---|---|---|---|
| Blind vias | .0006 (0.015) | .0005 (0.013) | .0003 (0.008) |
| Microvias, blind and buried | .0005 (0.013) | .0004 (0.010) | .00025 (0.006) |
| Buried vias, single layer core | .0006 (0.015) | .0005 (0.013) | .0003 (0.008) |
| Buried vias, core greater than 2 layers thick | .001 (0.025) | .0008 (0.020) | .0005 (0.013) |

A.3.6.7.2 Copper plating defects (see figure G–13 and figure G–14). Unless otherwise specified (see A.3.1.1), a 20 percent reduction of the specified copper plating thickness shall be acceptable if it is non-continuous (isolated; not more than 10 percent of the composite board thickness). Any copper plating less than 80 percent of the specified thickness shall be treated as a copper plating void.

A.3.6.7.3 Copper plating voids (see figure G–14). The copper plating in the plated-through holes shall not exhibit any void in excess of the following:

a. There shall be no more than one plating void for each panel, regardless of length or size.

b. There shall be no plating void in excess of 5 percent of the total printed wiring board thickness.

c. There shall be no plating voids evident at the interface of an internal conductive layer and plated hole wall.

Conductor finish plating or coating material between the base material and copper plating (i.e., behind the hole wall copper plating) is evidence of a void. Any plated-through hole exhibiting this condition shall be counted as having one void for panel acceptance purposes.

A.3.6.7.4 Conductive interface separations (see figure G–16). The term conductive interfaces shall be used to describe the junction between the hole wall plating or coating and the surfaces of internal and external layers of copper or metal foil. The interface between platings and coating (electroless copper, direct metallization copper, and non–electroless electroless copper substitutes, and electrolytic copper, whether panel or pattern plated) shall also be considered a conductive interface.

A.3.6.7.4.1 Copper to copper interfaces. Except along the vertical edge of the external copper foil (see figure G–16), there shall be no separations or contamination between the hole wall copper conductive interfaces. Conductive interface separations along the vertical edge of the external copper foil shall be acceptable.

A.3.6.7.4.2 Dissimilar metal interfaces. For printed wiring board designs containing metal cores with dissimilar metals (such as copper-invar-copper), contamination or separation at the conductive interface shall not exceed 20 percent of the thickness of the dissimilar metal.

A.3.6.7.5 Wicking of copper plating (see figure G–17). When measured from the edge of the drilled hole, wicking of copper plating into the base material shall be acceptable provided it does not reduce the conductor spacing below the minimum clearance spacing requirements specified (see A.3.1.1) and the wicking complies with the following:

a. If etchback is specified, wicking does not extend more than .005 inch (0.13 mm) maximum.

b. When etchback is not specified, wicking does not extend more than .004 inch (0.10 mm) maximum.



Source: https://assist.dla.mil -- Downloaded: 2016-11-03T17:14Z
Check the source to verify that this is the current version before use.

A.3.6.7.6 Via cap plating. The minimum via cap copper plating thickness over filled vias shall be as specified.

A.3.6.8 Hole wall deficiencies (see figure G–15). Nodules, plating folds, or plated glass fibers that project into the copper plating shall be acceptable provided that the hole diameter and the hole wall copper thickness are not reduced below the limits specified (see A.3.1.1). Isolated areas of reduced copper thickness due to glass fiber protrusions shall meet the minimum thickness requirements specified, when measured from the end of the protrusion to the edge of the hole plating.

A.3.6.9 Metallic cracks (see figure G–18). There shall be no cracks in the internal layer conductive foils, platings, or coatings. Cracks in outer layer metal foil shall be acceptable if they do not propagate into the plated copper. Cracks shall not be acceptable in the copper plating.

A.3.6.10 Nail-heading. Nail-heading of conductors shall not exceed 1.5 times the copper foil thickness.

A.3.7 Inspection requirements. The detailed requirements contained in this section, although determined by examination of sample printed wiring boards or test coupons, apply to all deliverable printed wiring boards.

A.3.7.1 External visual and dimensional acceptability (of printed wiring boards). When examined as specified in A.4.8.1, the printed wiring boards shall be in accordance with the requirements specified in A.3.1.1 (master drawing), A.3.4 (material), A.3.5 (visual and dimensional), A.3.8 (marking), A.3.10 (repair), and A.3.12 (workmanship).

A.3.7.2 Destructive physical analysis (DPA) by metallographic evaluation of printed wiring board test specimens. When printed wiring board test specimens (finished printed wiring boards, supporting test coupons, or qualification test specimens) are microsectioned and examined as specified in A.4.8.2, the requirements specified in A.3.1.1, A.3.3, and A.3.6 shall be met.

A.3.7.2.1 Non-stressed specimens (as received condition). After meeting the requirements of A.3.8 and A.3.12 when inspected in accordance with A.4.8.1, the non-stressed (as received) printed wiring board test specimen shall be microsectioned and inspected in accordance with A.4.8.2 and shall meet the requirements of A.3.6.

A.3.7.2.2 Registration, internal.

A.3.7.2.2.1 By microsection (method II). Unless otherwise specified (see A.3.1.1), when inspected as specified in A.4.8.2.2, the layer-to-layer pattern misregistration shall not reduce the minimum annular ring below the limits specified (see A.3.1.1).

A.3.7.2.2.2 By registration test coupons (method III) (optional). Registration test coupons may have been designed into the printed wiring board by the design activity, or may be added to the panel by the manufacturer to enhance testability (see A.4.8.2.2.2 and appendix H). To be usable for acceptance purposes, registration test coupons shall relate the actual grid location of each circuitry layer to all other circuitry layers and to the hole pattern accuracy required (see A.3.5.4) in each printed wiring board.



Source: https://assist.dla.mil -- Downloaded: 2016-11-03T17:14Z
Check the source to verify that this is the current version before use.

A.3.7.3 Chemical requirements.

A.3.7.3.1 Ionic contamination (cleanliness). When printed wiring boards are tested in accordance with A.4.8.3.1, the levels of ionic contamination shall be in accordance with the requirements of A.3.7.3.1.1 or A.3.7.3.1.2, as applicable. The sodium chloride salt equivalent ionic contamination test equipment specified in A.6.4.2 can be used in lieu of the method specified in A.4.8.3.1. When printed wiring boards are tested using the sodium chloride salt equivalent ionic contamination test equipment specified in A.6.4.2, the final value shall be less than equivalents of sodium chloride specified for the printed wiring board surface area tested.

A.3.7.3.1.1 Prior to the application of solder mask (see A.6.4). Unless otherwise specified (see A.3.1.1), the level of ionic contamination shall not exceed 10.06 micrograms/square inch (1.56 micrograms/square centimeter) prior to the application of solder mask.

A.3.7.3.1.2 Completed inner layer prior to lamination (when specified, see A.3.1.1 and A.6.2.2.g). The levels of ionic contamination for completed inner layers prior to lamination shall be as specified (see A.3.1.1).

A.3.7.3.1.3 Completed printed wiring boards (when specified, see A.3.1.1 and A.6.2.2.g). The levels of ionic contamination for completed printed wiring boards shall be as specified (see A.3.1.1).

A.3.7.3.2 Resistance to solvents (inks or paints). After ink or paint based markings or legends are tested in accordance with A.4.8.3.2, any specified markings or legends which are missing in whole or in part, faded, smeared, of shifted (dislodged) to the extent that they cannot be readily identified shall constitute failure.

A.3.7.4 Physical requirements.

A.3.7.4.1 Adhesion, coverlayer (including coverfilm and cover coat). When tested as specified in A.4.8.4.1, the maximum percentage of cured coverlayer lifted from the conductors, lands, or surface of the printed wiring board test specimen shall be in accordance with the following:

a. Bare copper or base material: Maximum percentage of lifting 0 percent.

b. Gold or nickel plating: Maximum percentage of lifting 5 percent.

c. Melting metals (tin-lead plating, solder coating, indium, bismuth, and others): Maximum percentage of lifting 10 percent.

A.3.7.4.2 Adhesion, legend and marking. After legends or marking are tested in accordance with A.4.8.4.2, any specified legend or markings which are missing in whole or in part, faded, shifted (dislodged), or smeared to the extent that it is no longer legible shall constitute failure. A slight change in the color of ink or paint markings after the test shall be acceptable.

A.3.7.4.3 Adhesion, plating. When tested as specified in A.4.8.4.3, there shall be no plating particles or conductor patterns removed from the printed wiring board test specimen except for outgrowth.

A.3.7.4.4 Adhesion, solder mask. When tested as specified in A.4.8.4.4, the maximum percentage of cured solder mask lifted from the surface of the base material, conductors, and lands of the coated printed wiring board test specimen shall be in accordance with the following:

a. Bare copper or base material: Maximum percentage of lifting 0 percent.

b. Gold or nickel plating: Maximum percentage of lifting 5 percent.

c. Melting metals (tin-lead plating, solder coating, indium, bismuth, and others): Maximum percentage of lifting 10 percent.



Source: https://assist.dla.mil -- Downloaded: 2016-11-03T17:14Z
Check the source to verify that this is the current version before use.

A.3.7.4.5 Bow and twist (stiffener sections). When tested as specified in A.4.8.4.5, the maximum allowable bow and twist for rigid or stiffener sections of the printed wiring board shall be, unless otherwise specified (see A.3.1.1), 0.75 percent for designs that use surface mount components and 1.5 percent for all other designs.

A.3.7.4.6 Flexibility endurance (installation use B only). When tested as specified in A.4.8.4.6, printed wiring board test specimen shall be capable of withstanding the specified conditions of A.3.7.4.6.1 or A.3.7.4.6.2, as applicable, without any evidence of damage, degradation or rejectable delamination. After the test, the requirements specified in A.3.5.3.2, A.3.7.5.1, and A.3.7.5.2 shall be met.

A.3.7.4.6.1 Qualification and periodic testing. Printed wiring board test specimen shall be capable of withstanding 100,000 cycles without any evidence of damage, degradation, or rejectable delamination.

A.3.7.4.6.2 User specified (see A.3.1.1 and A.6.2.2). The number of flexing cycles, flexing rate, and points of application of the flexing, travel of loop (if other than 1.0 inch (25.4 mm) minimum), and diameter of mandrel (when applicable) shall be specified (see A.3.1.1). If no parameters are specified, use the qualification and lot acceptance test default values of A.4.8.4.6.

A.3.7.4.7 Folding flexibility (installation use A only). When tested as specified in A.4.8.4.7, printed wiring board test specimen shall be capable of withstanding the specified conditions of A.3.7.4.7.1 or A.3.7.4.7.2, as applicable, without any evidence of damage, degradation, or rejectable delamination. After the test, the electrical requirements specified in A.3.7.5.1 and A.3.7.5.2 shall be met.

A.3.7.4.7.1 Qualification and periodic testing. The number of fold cycles shall be 25 cycles in both directions. The point of application shall be the center of the printed wiring board test specimen, orthogonal to the longest length. The mandrel size for types 1 and 2 shall be 12 times the sum of the total ply thickness reduced to the nearest .125 inch (3.18 mm). The mandrel size for types 3, 4, and 5 shall be 24 times the sum of the total ply thickness reduced to the nearest .125 inch (3.18 mm). The mandrel shall not be less than .125 inch (3.18 mm).

A.3.7.4.7.2 User specified (see A.3.1.1 and A.6.2.2). The folding flexibility test parameters shall be as specified (see A.3.1.1). The minimum parameters specified on the master drawing shall be as follows:

a. Direction of bend.

b. Degree of bend.

c. Number of fold cycles.

d. Diameter of mandrel.

e. Points of application.



Source: https://assist.dla.mil -- Downloaded: 2016-11-03T17:14Z
Check the source to verify that this is the current version before use.

A.3.7.4.8 Rework simulation. Rework simulation is not applicable for printed wiring board designs that do not use any plated through-holes for component attachment.

A.3.7.4.8.1 Grade R, types 1 and 5 with unsupported holes (bond strength). After undergoing the test specified in A.4.8.4.8.1, the unsupported land shall withstand 5 pounds (2.27 Kg) pull or 500 lb/in (3.4 MPa), whichever is less.

A.3.7.4.8.2 Grade R, types 2, 3 and 4 with plated-through holes. After undergoing the test specified in A.4.8.4.8.2, the type 2, 3 or 4 printed wiring board test specimens shall meet the following requirements:

a. External visual and dimensional inspection: When inspected as specified in A.4.8.1, there shall be no evidence of blistering or delamination in excess of that allowed in A.3.5.

b. Internal visual and dimensional inspection: The printed wiring board test specimen shall be microsectioned and inspected in accordance with A.4.8.2 and the requirements specified in A.3.6 shall be met.

A.3.7.4.8.3 Grade U. Printed wiring boards designs requiring grade U rework simulation shall be subjected to only the first solder cycle of the test routines specified in A.3.7.4.8.1 or A.3.7.4.8.2, as applicable.

A.3.7.4.9 Solderability. Solderability testing is applicable only on printed wiring board designs that require soldering during circuit card assembly processes. Unless otherwise specified (see A.3.1.1), printed wiring board designs that use compliant pin technology only for component attachment do not require solderability testing. Unless otherwise specified, printed wiring board designs that use surface mount components only shall be tested for surface solderability.

A.3.7.4.9.1 Hole (plated-through hole) solderability. After undergoing the test specified in A.4.8.4.9.1, the printed wiring board test specimen shall conform to the accept/reject criterion (good wetting, pinholes, dewetting, non-wetting) specified in J–STD–003 class 3 or the SERA test of appendix E, as applicable.

A.3.7.4.9.2 Surface (or surface mount land) solderability. After undergoing the test specified in A.4.8.4.9.2, the printed wiring board test specimen shall conform to the accept/reject criterion (good wetting, pinholes, dewetting, non-wetting) specified in J–STD–003 class 3 or the SERA test of appendix E, as applicable.

A.3.7.4.10 Solder mask cure. When tested as specified in A.4.8.4.10, the cured solder mask coating shall not exhibit tackiness, blistering, or delamination.

A.3.7.4.11 Surface peel strength (types 3 and 4 foil laminated printed wiring boards). When tested as specified in A.4.8.4.11, the surface conductor shall withstand a minimum peel strength greater than or equal to the "after thermal stress" values for the corresponding copper foil type, profile and weight specified by the base material specification. Unless otherwise specified (see A.3.1.1), the peel strength values for base material thicknesses over .0197 inch (0.050 mm) specified by the base material specification shall be used. This requirement is only applicable to foil laminated types 3 and 4 printed wiring boards that have surface conductors or surface mount lands. Printed wiring boards with no external circuitry (external terminal land or pads only) do not require peel strength testing.



Source: https://assist.dla.mil -- Downloaded: 2016-11-03T17:14Z
Check the source to verify that this is the current version before use.

A.3.7.5 Electrical requirements.

A.3.7.5.1 Circuit continuity and shorts.

A.3.7.5.1.1 Circuit continuity. When tested as specified in A.4.8.5.1, the resistance between the endpoints of conductor patterns within a network of conductors shall be as specified (see A.3.1.1). For qualification inspection there shall be no circuits whose resistance exceeds 20 ohms. Unless otherwise specified (see A.3.1.1), for production printed wiring boards, there shall be no circuit whose resistance exceeds 10 ohms. For referee purposes, 0.5 ohm maximum for each inch of circuit length shall apply. Conductor patterns that consist of long runs of narrow conductors or short runs of very wide conductors may increase or decrease the resistance. The acceptability of these type of circuits, of controlled impedance nets, or of embedded resistive patterns shall be specified.

A.3.7.5.1.2 Circuit shorts (isolation resistance). When tested as specified in A.4.8.5.1, the insulation resistance between mutually isolated conductors shall be as specified (see A.3.1.1) Unless otherwise specified (see A.3.1.1), for production printed wiring boards, the insulation resistance shall be greater than 10 megohms.

A.3.7.5.2 Circuit or plated-through hole short to metal core substrate. When printed wiring board designs with metal cores are tested in accordance with A.4.8.5.2, the dielectric material used to insulate the heat-sinking plane from circuitry and plated through holes shall provide an insulation resistance greater than 2 megohms. Electrical access to the metal core substrate shall be provided in the design when this test is to be performed.

A.3.7.5.3 Dielectric withstanding voltage (DWV). When inspected as specified in A.4.8.5.3, there shall be no flashover, sparkover, or breakdown between isolated conductors.

A.3.7.5.4 Impedance testing (when specified). When impedance resistance values are specified, all printed wiring boards shall be electrically testing tested as specified in A.4.8.5.4.

A.3.7.6 Environmental requirements.

A.3.7.6.1 Moisture and insulation resistance (MIR). When tested as specified in A.4.8.6.1, the printed wiring board test specimen shall have a minimum of 500 megohms of resistance between conductors. After the test, the printed wiring board test specimen shall be inspected in accordance with A.4.8.1 and the specimen shall not exhibit blistering, measling, or delamination in excess of that allowed in A.3.5.1.3.

A.3.7.6.2 Resistance to soldering heat.

A.3.7.6.2.1 Solder float thermal stress (single side, single cycle, component holes).

A.3.7.6.2.1.1 Types 1 and 5. After undergoing the test specified in A.4.8.6.2, the printed wiring board test specimen shall be inspected in accordance with A.4.8.1 and shall not exhibit any cracking or separation of plating and conductors, blistering or delamination of base materials shall not exceed the limits allowed in A.3.5.1.3, and lands shall not lift in excess of that allowed in A.3.5.5.

A.3.7.6.2.1.2 Types 2, 3, and 4. After undergoing the test specified in A.4.8.6.2, the printed wiring board test specimen shall be examined in accordance with A.4.8.1 and shall exhibit no blistering or delamination in excess of that allowed in A.3.5.1.3. After meeting the visual and dimensional requirements of A.3.5, the printed wiring board test specimen shall be microsectioned and inspected in accordance with A.4.8.2 and the requirements of A.3.6 shall be met.



Source: https://assist.dla.mil -- Downloaded: 2016-11-03T17:14Z
Check the source to verify that this is the current version before use.

A.3.7.6.3 Thermal shock. While undergoing the test specified in A.4.8.6.3, a resistance change of 10 percent or more between the first and last high temperature measurements shall be considered a reject. After the test, the printed wiring board test specimens shall meet the following requirements:

a. External visual and dimensional inspection (all types): When inspected as specified in A.4.8.1, there shall be no evidence of plating cracks, blistering, or delamination in excess of that allowed in A.3.5.1.3.

b. Internal visual and dimensional inspection (types 3 and 4): When the printed wiring board test specimen is microsectioned and inspected in accordance with A.4.8.2, the requirements specified in A.3.6 shall be met.

A.3.8 Marking.

A.3.8.1 Product identification and test vehicle traceability codes. Unless otherwise specified (see A.6.2), each production printed wiring board, each qualification test specimen, and each set of quality conformance test circuit strips (as opposed to each individual test coupon) shall be marked as specified (see A.3.1.1) and herein. As a minimum, each production printed wiring board, qualification test specimen, or quality conformance test circuit strip shall be marked with the printed wiring board manufacturers' CAGE code (see 6.4.5), lot date code (see A.3.8.5), and traceability code (see A.7.15). Additional marking on the printed wiring boards is allowed provided it does not interfere with the required marking.

A.3.8.2 Legend. Legends on printed wiring boards shall be as specified (see A.3.1.1).

A.3.8.3 Methods of producing legend and marking. Legend and marking shall be produced by one of the following methods: the same process used in producing the conductive pattern; or the use of a fungistatic ink or paint applied to the printed wiring board; or on a label which is applied to the printed wiring board; or by a mechanical pencil, mechanical machining, or laser machining on a metallic area provided for marking purposes. Conductive legends or marking shall be no closer to the conductive pattern of the printed wiring board than the spacing requirements specified (see A.3.1.1).

A.3.8.4 Marking legibility. All marking shall be able to withstand solder fluxes, cleaning solutions, and molten solder encountered in the manufacture of printed wiring boards, shall remain legible after all tests, and in no manner affect printed wiring board performance. After any or all tests, product identification or traceability marking shall comply with the class 3, acceptable conditions specified in IPC–A–600.

A.3.8.5 Lot date code. The lot date code is a unique code to identify the period during which the printed wiring boards were manufactured. Unless otherwise specified in the QPL product assurance procedures (see A.3.2.1.1) or by the acquiring activity (see A.3.1.1), the first two numbers in the lot date code shall be two digits of the number of the year, and the third and fourth number shall be two digits indicating the calendar week of the year. When the number of the week is a single digit, it shall be proceeded by a zero reading from left to right or from top to bottom, the code number shall designate the year and week, in that order.



Source: https://assist.dla.mil -- Downloaded: 2016-11-03T17:14Z
Check the source to verify that this is the current version before use.

A.3.9 Traceability. Unless otherwise specified, traceability shall be available for review by the qualifying or contracting activity for a minimum of 3 years after delivery of the printed wiring boards. Lost or inadequate quality records, supporting data, and test coupons (including microsection mounts and untested test coupons) may result in loss of qualification.

A.3.9.1 Quality–conformance test circuitry, test coupons, and microsection mounts. Each quality–conformance test circuitry (QCTC) shall be identifiable with those corresponding production printed wiring boards produced on the same inspection panel that also produced the QCTC. Unless otherwise specified (see A.3.1.1), each QCTC shall be traceable to its originating position on the panel. All individual test coupons (including those in microsection mounts) separated from its QCTC, or qualification test specimen, shall have its traceability maintained back to the inspection panel, QCTC, or qualification test specimen from where the test coupons originated. When a QCTC or test coupon is representative of more than one printed wiring board design (multiple designs on each panel), it shall be traceable to those printed wiring boards fabricated on that inspection panel. When a microsection mount contains more than one specimen, an orientation mark or other identification marking shall identify layer one of the first specimen. Unless otherwise listed on the multiple specimen microsection mount, traceability identifying all specimens contained in a mount shall be maintained.

A.3.9.2 Printed board materials. Traceability shall be such that for each printed wiring board, all printed board materials specified (see A.3.1.1) or used shall be traceable to a material production lot, inspection lot, or other specified grouping.

A.3.9.3 Serialization. When the contract requires the printed wiring boards to be serialized, each printed wiring board or qualification test specimen shall be marked with a unique serial number assigned consecutively within the inspection lot, allowing traceability of the printed wiring board and its test results.

A.3.9.4 Quality records. A system shall be in place to track all quality records, including but not limited to, the results of all qualification tests, inspection of product for delivery tests (attributes or variable data), any required failure analysis, and contract services records. The retention period for each type of quality records shall be a minimum of 3 years.

A.3.10 Repair. When inspected in accordance with A.4.8.1, printed wiring boards shall not be repaired or reveal any evidence of repair.

A.3.11 Recycled, recovered, or environmentally preferable materials. Recycled, recovered, or environmentally preferable materials should be used to the maximum extent possible provided that the material meets or exceeds the operational and maintenance requirements, and promotes economically advantageous life cycle costs.

A.3.12 Workmanship. Printed wiring boards shall be processed in such a manner as to be uniform in quality and shall be free of defects in excess of those allowed in this appendix that could affect life or serviceability.



Source: https://assist.dla.mil -- Downloaded: 2016-11-03T17:14Z
Check the source to verify that this is the current version before use.

A.4. VERIFICATION

A.4.1 Classification of inspections. The inspections requirements specified herein are classified as follows:

a. Qualification inspection (see A.4.5).

b. Inspection of product for delivery (see A.4.6).

c. Periodic conformance inspection (see A.4.7).

A.4.2 Test and measuring equipment. Measuring and test equipment of sufficient accuracy, quality, and quantity to permit performance of the required inspection shall be established and maintained by the manufacturer. The establishment and maintenance of a calibration system to control the accuracy of the measuring and test equipment shall be in accordance with section C.5 of appendix C, or equivalent.

A.4.3 Inspection conditions. Unless otherwise specified in the applicable test method or procedure, inspections and tests shall be performed in accordance with test method number 1.3 of IPC-TM-650.

A.4.4 Printed wiring board performance verification. Printed wiring board performance verification shall consist of inspections on the production printed wiring boards and the QCTC or test coupons referenced in tables herein for in-process, groups A, B, and C inspections. Selection of test coupons for testing shall be in accordance with the applicable inspection table. Each production printed wiring board or panel of printed wiring boards shall include sufficient test coupons to complete the applicable verification requirements specified. The design of test coupons shall be as specified on the applicable master drawing (see A.3.1.1). The minimum number of test coupons on the production panel and the requirements for positioning the test coupons on the inspection panel shall be in accordance with the requirements of appendix H.

A.4.5 Qualification inspection (see A.6.3). Qualification inspection shall be performed at the manufacturing location and a laboratory acceptable to the Government on sample qualification test specimens produced with material, equipment, processes, and procedures normally used in production.

A.4.5.1 Qualification eligibility. The fabrication of the qualification test specimens may begin before authorization to test is granted, however, before the start of qualification testing, the manufacturer shall receive authorization from the qualifying activity. The manufacturer shall contact the qualifying activity if exceptions are required to standard qualification routines.

A.4.5.2 Qualification test specimens. Unless otherwise specified, qualification test specimens shall be as defined herein. Changes to the design or requirements of the qualification test specimens shall be detailed on the Authorization to Test Form, DSCC Form 19W, and approved by the qualifying activity. Requests for modifications to the qualification test specimens shall be made prior to, or at the time of, the request for qualification testing. If qualification test specimens for conductor surface final finish, foil lamination, and solder mask are fabricated during normal production, the samples shall be taken at random from a production run and shall be produced with equipment and procedures that will be used in subsequent production.



Source: https://assist.dla.mil -- Downloaded: 2016-11-03T17:14Z
Check the source to verify that this is the current version before use.

A.4.5.2.1 Printed wiring board type. The qualification test specimens for printed wiring board type shall comply with the requirements specified as follows:

a. Type 1: The qualification test specimens for type 1 printed wiring boards shall meet the requirements specified on DSCC Form 19W.

b. Type 2: The qualification test specimens for type 2 printed wiring boards shall meet the requirements specified on DSCC Form 19W.

c. Types 3 and 4: The qualification test specimens for types 3 and 4 printed wiring boards shall meet the requirements specified on DSCC Form 19W. In addition, samples conforming to A.4.5.2.2 shall be supplied for installation use B coverage.

d. Type 5: The qualification test specimens for type 5 printed wiring boards shall meet the requirements specified on DSCC Form 19W.

All portions of zones A, B, and C (except for the external conductor traces on test coupon E–5) are now required for both the manufacturer test routine (MTR) and the certified suitable laboratory test routine (CTR) of qualification testing. The test coupons of Zone D are used primarily in the MTR portion detailed in A.4.5.4.1. If design defaults are not listed on DSCC Form 19W, then the values specified in IPC–2221 and IPC–2223 shall apply.

A.4.5.2.2 Installation use. The qualification test specimens for installation use B (continuous flex) shall meet the requirements of the "H–1" or "H–5" test coupon as described on a type 1 qualification test specimen of A.4.5.2.1.a or appendix H.

A.4.5.2.3 Conductor surface finish. The qualification test specimens for conductor surface finish shall comply with the requirements specified on DSCC Form 19W (test coupons "AB" or "C") or conform to the test coupon design of IPC–2221 (test coupons "A", "J", "M", or "S") when produced on a production panel.

A.4.5.2.4 Foil lamination. The qualification test specimens for foil lamination shall comply with the requirements specified on DSCC Form 19W or conform to the "P" test coupon design of appendix H. Surface peel strength test coupons can be added to Zone D of the printed wiring board type qualification test specimens or produced on a production panel.

A.4.5.2.5 Solder mask. The qualification test specimens for solder mask shall comply with the requirements specified on DSCC Form 19W (test coupons G–1 and G–2) or conform to the "G" test coupon design of IPC–2221.

A.4.5.2.6 Rework capability. Unless otherwise specified on DSCC Form 19W, test coupons specified in table table A–VI from the printed wiring board type qualification test specimen shall be subjected to rework capability grade R testing during the CTR portion of the qualification tests.

A.4.5.3 Qualification test specimen sample size. The number of sample units comprising a sample of qualification test specimens to be submitted for qualification inspection shall be as specified in A.4.5.3.1 through A.4.5.3.5 inclusive, as applicable. When the qualification test specimens for conductor surface final finish, foil lamination, and solder mask are fabricated on production panels, the samples shall be taken from production lots produced with equipment and procedures that will be used in subsequent production. Unless otherwise specified on the qualifying activity approved DSCC Form 19W, the qualification test specimens shall be serialized and comply with the identification marking requirements of A.3.8.



Source: https://assist.dla.mil -- Downloaded: 2016-11-03T17:14Z
Check the source to verify that this is the current version before use.

A.4.5.3.1 Printed wiring board type. The number of sample units comprising a sample of printed wiring board type qualification test specimens will depend on if etchback is performed by the manufacturer (see A.4.5.3.1.1) or by a contract service sub-contractor (see A.4.5.3.1.2). The manufacturer is required to perform the tests and inspections specified in A.4.5.4.1 on all printed wiring board type qualification test specimens produced regardless of whether the qualification test specimens are processed with etchback or desmear.

A.4.5.3.1.1 In–plant etchback capability. When the etchback process is performed at the manufacturer's plant location, a sample of at least four printed wiring board type qualification test specimens shall be produced by the manufacturer for MTR inspection and testing using their in–plant etchback capability. A sample of two printed wiring board type qualification test specimens shall be submitted for CTR qualification testing.

A.4.5.3.1.2 Contract services etchback. When the etchback process will be performed by a contract service sub-contractor external to the manufacturer's plant location, a sample of at least four printed wiring board type qualification test specimens shall be produced for inspection and testing using the contract service sub-contractors etchback process. In addition, a sample of at least four printed wiring board type qualification test specimens shall be produced using the manufacturer's own in-plant desmear process. A sample of two printed wiring board type qualification test specimens that represent the desmear process and a sample of two printed wiring board type qualification test specimens that represent the contract service etchback process shall be submitted for CTR qualification testing.

A.4.5.3.2 Installation use (use A or B). A sample of at least two type 1 or type 2 qualification test specimens shall be produced by the manufacturer for inspection and testing. The two qualification test specimens shall be submitted for CTR qualification testing.

A.4.5.3.3 Conductor surface finish. A sample of at least 12 qualification test specimens for each conductor surface finish that is to be qualified shall be produced by the manufacturer or contract service sub-contractor for inspection and testing.

A.4.5.3.4 Foil lamination. A sample of at least 8 qualification test specimens shall be produced by the manufacturer for inspection and testing. The 8 qualification test specimens shall be submitted for CTR qualification testing.

A.4.5.3.5 Solder mask. A sample of at least 4 qualification test specimens for each solder mask that is to be qualified shall be produced by the manufacturer or contract service sub-contractor for inspection and testing.

A.4.5.4 Inspection routines. Qualification inspection shall consist of the tests and inspections specified herein. The following details shall apply:

a. The manufacturer shall test all printed wiring board type qualification test specimens and their associated panel test coupons produced in the production lot and the specified number of conductor surface finish and solder mask qualification test specimens to the requirements of A.4.5.4.1.

b. Upon the completion of testing of sample units to the requirements of A.4.5.4.1, the manufacturer then shall submit the specified number of printed wiring board type qualification test specimens, installation use, conductor surface finish, and foil lamination qualification test specimens to a certified suitable laboratory (see A.6.6) for testing to the requirements of A.4.5.4.2.

c. At least two of the remaining printed wiring board type qualification test specimens (zones A, B, and C) not subjected to destructive testing at a certified suitable laboratory shall be retained as reference samples by the manufacturer for a period of 12 months.



Source: https://assist.dla.mil -- Downloaded: 2016-11-03T17:14Z
Check the source to verify that this is the current version before use.

A.4.5.4.1 Manufacturer test routine (MTR).

A.4.5.4.1.1 Printed wiring board type. The manufacturer shall perform the inspections specified in the MTR column of table A–VI, subgroups 1A, 1B, 1C, 1D, 1E, 3, and 5, as applicable on the printed wiring board type sample units. Non-destructive inspections shall be performed on zones A, B, and C and destructive testing and microsection inspections shall be performed on test coupons from zone D. MTR testing shall be performed on all of the completed qualification test specimens in the lot. Further details concerning test coupons selection can be found in the application for qualification available from the qualifying activity.

A.4.5.4.1.2 Installation use (subgroup 2). Unless otherwise specified, subgroup 2 inspection and testing on installation use sample units is not performed during the MTR portion of qualification testing.

A.4.5.4.1.3 Conductor surface finish (subgroup 3). The manufacturer shall perform the following inspections on the conductor surface finish sample units. After two samples units are verified as meeting the thickness requirements of A.3.6.2.5 by either non-destructive (A.4.8.1.6) or destructive (A.4.8.2) means, two sample units shall be subjected to plating adhesion (A.3.7.4.3 and A.4.8.4.3), and a minimum of 30 holes (for hole solderability) or two sample units (for surface solderability) shall be verified for solderability (A.3.7.4.9 and A.4.8.4.9).

A.4.5.4.1.4 Foil lamination (subgroup 4). Unless otherwise specified, subgroup 4 inspection and testing is not performed during the MTR portion of qualification testing.

A.4.5.4.1.5 Solder mask (subgroup 5). The manufacturer shall perform the following inspections on the solder mask sample units. After meeting the thickness requirements of A.3.5.7.5 by either non-destructive (A.4.8.1.4) or destructive (A.4.8.2) means, two sample units shall be subjected to solder mask adhesion (A.3.7.4.4 and A.4.8.4.4) and two sample units shall be subjected to solder mask cure (A.3.7.4.10 and A.4.8.4.10) testing.

A.4.5.4.1.6 Disposition of sample units. The test coupons from zone D, conductor surface finish, and solder mask test specimens that have been subjected to the MTR portion of qualification inspection shall be delivered to the qualifying activity as a part of the qualification test report.

A.4.5.4.2 Certified suitable laboratory test routine (CTR) (see C.6).

A.4.5.4.2.1 Printed wiring board type. The certified suitable laboratory shall perform the inspections specified in the CTR column of table A–VI, subgroups 1A, 1B, 1C, 1D, and 1E on zones A, B, and C of the printed wiring board type sample units. When qualifying in-plant etchback, the sample size shall be two printed wiring board type sample units. When qualifying contract services etchback, the sample of printed wiring board type shall contain two desmear and two etchback sample units. The order of the inspections and tests is optional; however, the ionic contamination test shall be performed first and the DWV test shall be performed after MIR inspection.

A.4.5.4.2.2 Installation use (subgroup 2). The certified suitable laboratory shall subject one of the installation use B sample units to the subgroup 2 inspections specified in the CTR column of table A–VI.

A.4.5.4.2.3 Conductor surface finish (subgroup 3). The certified suitable laboratory shall perform the following inspections on the conductor surface finish sample units. After two samples units are verified as meeting the thickness requirements of A.3.6.2.5 by either non-destructive (A.4.8.1.6) or destructive (A.4.8.2) means, two sample units shall be subjected to plating adhesion (A.3.7.4.3 and A.4.8.4.3), and a minimum of 30 holes (surface solderability) or two sample units (for surface solderability) shall be verified for solderability (A.3.7.4.9 and A.4.8.4.9).

A.4.5.4.2.4 Foil lamination (subgroup 4). The certified suitable laboratory shall subject eight of the foil lamination sample units to the subgroup 4 inspections specified in the CTR column of table A–VI.

A.4.5.4.2.5 Solder mask (subgroup 5). Unless otherwise specified, subgroup 5 inspections and testing on solder mask sample units is not performed during the CTR portion of qualification testing.



Source: https://assist.dla.mil -- Downloaded: 2016-11-03T17:14Z
Check the source to verify that this is the current version before use.

A.4.5.4.3 Contract services. Manufacturers wanting to use a sub-contracted service external to the location to be qualified for the production of printed wiring boards shall detail the materials and processes that will be used on DSCC Form 19W. The qualification test specimens produced by the QPL manufacturer and the sub-contracted service provider shall be representative of the subsequent production printed wiring boards. The sub-contract service shall not be extended to another external sub-contract service provider or manufacturer. If the sub-contracted service is changed (materials or processes), the manufacturer may be required to requalify the sub-contracted service.

NOTE: For the purposes of this appendix, the internal equipment/process condition applies only to those processes used to manufacture the qualification test specimens. When applying for qualification of a sub-contracted service, the materials and process the company performing the sub-contracted service shall be identified. If the manufacturer has no internal capability to perform a certain production step (either used during qualification or only used during production) this shall be identified in the product assurance procedures and on the application for authorization to test.

A.4.5.4.4 Qualification rejection. Qualification approval will not be granted if any of the qualification test specimens tested in accordance with table A–VI fail to meet the specified requirements.

A.4.5.5 Extent of qualification.

A.4.5.5.1 Printed wiring board type. Qualification of a particular printed wiring board type shall be extended to cover all conductor patterns of that same printed wiring board type produced.

a. Qualification of type 4 printed wiring boards shall be extended to cover all other types (5, 3, 2, and 1).

b. Qualification of type 3 printed wiring boards shall be extended to cover types 1 and 2 printed wiring boards.

c. Qualification of type 2 printed wiring boards shall be extended to cover type 1 printed wiring boards.

d. Qualification of type 5 printed wiring boards shall be extended to cover type 1 printed wiring boards.

e. Qualification of any type shall be extended to cover the approved type or types with a stiffener.

A.4.5.5.2 Installation use. Qualification to installation use B shall be extended to cover installation use A. If not qualifying installation use B, installation use A shall be qualified (see subgroup 2 of table A–VI).

A.4.5.5.3 Rework capability. Qualification to rework capability grade R shall be extended to cover rework capability grade U.



Source: https://assist.dla.mil -- Downloaded: 2016-11-03T17:14Z
Check the source to verify that this is the current version before use.

TABLE A–VI. Qualification inspection.

| Inspection | Requirement paragraph | Method paragraph | Test specimen 1/ | | Notes |
|---|---|---|---|---|---|
| | | | MTR 2/ | CTR | |
| Subgroup 1A | | | | | |
| Materials | A.3.4 | A.4.8.1.8 | | | |
| External visual and dimensional acceptability | A.3.7.1 | A.4.8.1 | PWB | PWB | 3/ |
| Subgroup 1B (microsection) | | | | | |
| As received | A.3.7.2.1 | A.4.8.2 | AB–12 | A–4 | |
| Registration (method II) | A.3.7.2.2 | A.4.8.2.2 | 4/ | 4/ | 4/ |
| Subgroup 1C | | | | | |
| Ionic contamination | A.3.7.3.1 | A.4.8.3.1 | PWB | PWB | 3/ |
| Resistance to solvents | A.3.7.3.2 | A.4.8.3.2 | 5/ 6/ | 5/ | |
| Subgroup 1D | | | | | |
| Adhesion, coverlayer | A.3.7.4.1 | A.4.8.4.1 | | A–5 and B–5 | 3/ 7/ |
| Adhesion, legend | A.3.7.4.2 | A.4.8.4.2 | 8/ | | 8/ |
| Bow and twist | A.3.7.4.5 | A.4.8.4.5 | PWB | PWB | 9/ |
| Rework simulation | A.3.7.4.8 | A.4.8.4.8 | | B–2 | |
| Subgroup 1E | | | | | |
| Circuit continuity | A.3.7.5.1.1 | A.4.8.5.1.2 | H–1, –2, and –3 | D–3 | 10/ |
| Circuit shorts | A.3.7.5.1.2 | A.4.8.5.1.2 | H–1, –2, and –3 | E–3 | |
| Dielectric withstanding voltage | A.3.7.5.3 | A.4.8.5.3 | | E–1 | 11/ |
| Subgroup 1F | | | | | |
| Moisture and insulation resistance | A.3.7.6.1 | A.4.8.6.1 | | E–1 | 11/ |
| Resistance to soldering heat | A.3.7.6.2 | A.4.8.6.2 | AB–8 and AB–13 | A–1 and B–6 | 12/ |
| Thermal shock | A.3.7.6.3 | A.4.8.6.3 | | D–3 | |
| Subgroup 2 | | | | | |
| Flexibility endurance | A.3.7.4.6 | A.4.8.4.6 | | H–1 or H–5 | 13/ |
| Folding flexibility | A.3.7.4.7 | A.4.8.4.7 | | H–2 | 14/ |
| Subgroup 3 | | | | | |
| Thickness (plating or coating) | A.3.6.2.5 | A.4.8.2 | 15/ | 15/ | 15/ |
| Adhesion, plating | A.3.7.4.3 | A.4.8.4.3 | J, C, or M | C–1, C–4, and C–5 | 16/ |
| Solderability | | | | | |
| Hole | A.3.7.4.9.1 | A.4.8.4.9.1 | A, AB, or S | A–3 and B–3 | 17/ |
| Surface (type 1 and 5 only) | A.3.7.4.9.2 | A.4.8.4.9.2 | C or M | D–2 and D–6 | 18/ |
| Subgroup 4 | | | | | |
| Surface peel strength | A.3.7.4.11 | A.4.8.4.11 | | P | 19/ |
| Subgroup 5 | | | | | |
| Solder mask thickness | A.3.5.7.5 | A.4.8.2 | G or Y | | 20/ |
| Solder mask adhesion | A.3.7.4.4 | A.4.8.4.4 | G or Y | | 20/ |
| Solder mask cure | A.3.7.4.10 | A.4.8.4.10 | G or Y | | 20/ |

See footnotes at end of table.



Source: https://assist.dla.mil -- Downloaded: 2016-11-03T17:14Z
Check the source to verify that this is the current version before use.

TABLE A–VI. Qualification inspection – Continued.

1/ See A.4.5.2 for qualification test specimen description. MTR designates manufacturer's test routine and CTR designates the certified test laboratories test routine. For column MTR, when a test coupon is referenced (for example, AB–10), unless otherwise specified, only one of the two coupons (9 of 18 available holes) shall be inspected. For column CTR, when an individual test coupon designation is referenced (for example, B–6) means inspect the specified test coupon. See qualification test specimen master drawing for test coupon design.
2/ Non-destructive inspections shall be performed on zones A, B, and C on all of the completed qualification test specimens in the lot. Destructive testing and microsection inspections shall be performed on test coupons from zone D on all of the completed qualification test specimens in the lot.
3/ The reference "PWB" in a column means inspect all features, holes, and patterns in zones A, B, and C of a printed wiring board type qualification test specimen with the exception that conductor spacing and width on test coupon E–5 shall not be evaluated in zone C.
4/ Type 3 and 4 only. See A.4.8.2.2 for registration sample units and microsectioning details. Test coupons AB–8 and AB–13 (column MTR) or A–1 and B–6 (column CTR) can be used to meet the diagonal corner requirement.
5/ The minimum number of sample units shall be at least one sample for each solution specified by the applicable test method.
6/ Required only if the manufacturer has the capability to perform this test during group A inspection (see A.4.8.3.2.1).
7/ Bow and twist shall be evaluated on rigidized section or stiffener portions only.
8/ See appendix H for test coupon design.
9/ Applicable to platings only. This inspection does not need to be performed on solder or organic coatings.
10/ When circuit continuity verification is performed manually, the current shall not be in excess of 1.5 amperes and the time of application shall not exceed 30 seconds.
11/ The dielectric withstanding voltage test shall be performed after the moisture and insulation resistance test.
12/ Use coupon closest to the corner on MTR routine. One of the test coupons shall be microsectioned in the qualification test specimen's length direction and the other shall be microsectioned along the qualification test specimen's width direction.
13/ Flexibility endurance shall be performed on a type 1 specimen.
14/ Test coupons G–1 and G–2 when produced on the qualification test coupon, and test coupon G in accordance with IPC–2221 when qualification test specimens are taken from production panels.
15/ See A.4.5.4.1.3 for inspection and verification routine.
16/ Test coupons J–1 & J–2 when produced on the qualification test coupon, and test coupon "C" or "M" in accordance with IPC–2221 when qualification test specimens are taken from production panels. The test specimens for CTR testing shall be test coupons C–1, C–4, and C–5 from two qualification test specimens.
17/ The test specimens for MTR testing can be of the following: Two complete or four test coupons AB–10 (36 holes total) from two (for complete) or four (for half size) qualification test specimen panels; four test coupons "A" from production panels; one test coupon "S" from a production panel. The test specimens for CTR testing shall be test coupons A–3 and B–3 from two qualification test specimens (36 holes total).
18/ The test specimens for MTR testing can be of the following: Two complete or four half test coupons AB–7 (36 holes total) from two (for complete) or four (for half size) qualification test specimen panels; four test coupons "A" from production panels; one test coupon "S" from a production panel; or one test coupon "M". The test specimens for CTR testing shall be test coupons D–2 and D–6 from two qualification test specimens (36 holes total).
19/ Peel strength testing is only required for qualification when the manufacturer uses foil lamination on the outer layers. A minimum of eight test coupons shall be tested. See appendix H for test coupon design.
20/ See A.4.5.4.1.5 for inspection and verification routine.



Source: https://assist.dla.mil -- Downloaded: 2016-11-03T17:14Z
Check the source to verify that this is the current version before use.

A.4.5.5.4 Materials.

A.4.5.5.4.1 Base material types. Printed wiring board designs using different base material types (mixed base materials) within the same class of base material (rigid versus flexible) shall be fabricated by manufacturers qualified for all base materials required by the design.

A.4.5.5.4.1.1 Flexible base material. Qualification of any type of flexible base material type shall be extended to cover all flexible base material types. Qualification with a metal cladding adhesion method (adhesive/adhesiveless) shall be as follows:

a. Adhesive family include all base materials that rely/use an adhesive to hold the metal to both sides of the dielectric. NOTE: "Cast" materials are considered to be in the adhesiveless family.

b. Adhesiveless family includes all base materials that use other techniques (such as chemically deposited or vapor deposition) to adhere the basis metal to both sides of the dielectric.

A.4.5.5.4.1.2 Rigid base material. Qualification with a rigid base laminate material shall be as follows:

a. Qualification with thermosetting resin (see IPC–T–50 and A.7.9.1) base material types shall be extended to cover all other types of thermosetting resin base materials.

b. Qualification with thermoplastic resin (see IPC–T–50 and A.7.9.2) base material types shall be extended to cover all other types of thermoplastic resin base materials.

A.4.5.5.4.2 Conductor surface finish. The qualification of a conductor surface finish shall be extended to cover all compositions or thicknesses of that specific conductor surface finish material.

A.4.5.5.4.3 Solder mask. The qualification of a solder mask shall be extended to cover all solder mask materials of the type qualified.

A.4.5.5.4.4 Stiffeners. Qualification of any printed wiring board type shall be extended to cover the approved type with a stiffener.

A.4.5.5.5 Processes.

A.4.5.5.5.1 Etchback. Qualification using etchback shall be extended to cover desmear (non-etchback).

A.4.5.5.5.2 Foil lamination. Qualification using foil lamination shall be extended to cover cap lamination.

A.4.5.5.5.3 Mass lamination (see A.7.4.1). Qualification of a contract lamination (four conductor layers) shall be extended to cover a contract lamination of three conductor layers. Qualification of a contract lamination (ten conductor layers) shall be extended to cover a contract lamination of three or more conductor layers. NOTE: Qualification test specimens for four layer contract service lamination shall meet the requirements specified in A.4.5.2.1.d. Qualification test specimens for ten layer contract service lamination shall meet the requirements specified in A.4.5.2.1.c.

A.4.5.5.6 Process changes. Any changes to a manufacturers qualified base material type, contract service, equipment, or processes shall be reviewed by the qualifying activity for determination if partial or full requalification is necessary.



Source: https://assist.dla.mil -- Downloaded: 2016-11-03T17:14Z
Check the source to verify that this is the current version before use.

A.4.5.6 Retention of qualification. To retain qualification, the manufacturer shall make available to the qualifying activity data concerning production of qualified product at 12 month intervals. The qualifying activity shall establish the initial reporting date. The retention of qualification data shall consist of:

a. A summary of the results of the tests performed for inspection of product delivery (in-process and group A) indicating as a minimum the number of lots that have passed and the number of lots that have failed. The results of tests of all reworked lots shall be identified and accounted for.

b. A summary of the results of tests performed for groups B and C inspection performed and completed during the 12 month period.

c. The actual test data for groups A, B, or C or all shall be supplied to the qualifying activity upon request.

d. The extent of qualification specified in A.4.5.5 shall apply.

e. Group B is performed each month, only for those months in which production occurred.

f. To retain qualification, the manufacturer shall requalify every 36 months from the date of initial qualification.

A.4.5.6.1 Failure to submit retention data. Failure to communicate with the qualifying activity within 60 calendar days after the end of the 12 month period may result in loss of qualification. In addition, the manufacturer shall notify the qualifying activity within 3 business days if at any time during the 12 month period that the results of periodic inspection indicates failure of the qualified product to meet the performance requirements of this appendix.

A.4.5.6.2 Non-production during reporting period. In the event that there is no production of any compliant printed wiring boards during the 12 month reporting period, the manufacturer shall certify that it retains the capabilities and facilities necessary to produce and test the qualified product. If during two consecutive reporting periods there has been no production of the qualified product, the manufacturer may be required, at the discretion of the qualifying activity, to submit a representative product to partial or full re-qualification testing. For the case when the manufacturer is listed for more than one flexible base material type on the QPL and there has been no production of the qualified product of one or all qualified base material types, the manufacturer may be required, at the discretion of the qualifying activity, to submit a representative product of those base material types to testing.

A.4.5.6.3 Facility changes (see A.3.2.1.2). The manufacturer shall notify the qualifying activity, in writing, of any changes in the facilities used to manufacture QPL printed wiring boards. Subsequently, the qualifying activity will notify the manufacturer, in writing, if a full re-qualification, partial re-qualification, or no additional testing is required as a result of the changes.

A.4.5.7 Requalification (see 6.3.4). Qualifications expire 36 months from the date of initial qualification. In order to maintain a QPL–50884 listing, manufacturers shall complete requalification before the end of its current 36 month qualification.



Source: https://assist.dla.mil -- Downloaded: 2016-11-03T17:14Z
Check the source to verify that this is the current version before use.

A.4.6 Inspection of product for delivery. Inspection of product for delivery shall consist of in-process and group A inspection. Except as specified in A.4.7.1.4, delivery of printed wiring boards which have passed in-process and group A inspection shall not be delayed pending the results of the periodic inspection. Anomalies or defects noted on sample printed wiring boards or test coupons (or both) defined herein shall be recorded and the proper corrective action shall be initiated. Manufacturers that are qualified to use sub-contract services are still responsible for in-process and group A inspections and shall be subject to loss of qualification if the results of in-process and group A inspections indicate failure of the product to meet the applicable requirements.

A.4.6.1 In–process inspection. Each inspection lot of printed wiring boards or panels, as applicable, shall be inspected in accordance with table A–VII. When permanent solder mask is specified (see A.3.1.1), the in-process inspections specified in subgroups 1, 2 and 3 of table A–VII shall be performed prior to solder mask application. Prior to lamination of type 3 or 4 printed wiring boards, the in-process inspections specified in subgroup 2 of table A–VII shall be performed.

A.4.6.1.1 Inspection lot.

A.4.6.1.1.1 Subgroup 1. An inspection lot shall correspond to each production lot or each change of shift of work force, whichever occurs first. Production lots may be grouped based on same materials, same type or types of interfacial connections and terminations, and same processing requirements.

A.4.6.1.1.2 Subgroup 2. An inspection lot shall consist of the number of printed wiring boards fabricated from the same materials, using the same processing procedures, produced under the same conditions within a maximum period of 1 month and offered for inspection at one time.

A.4.6.1.2 Sample size. The number of printed wiring boards or panels to be selected from each inspection lot for examination shall be in accordance with table A–VII. All samples shall be chosen randomly.

A.4.6.1.3 Rejected lots. If an inspection lot is rejected as a result of a failure to pass the subgroup 1 tests specified, the manufacturer shall withdraw the lot, take corrective action in connection with the cleaning materials and procedures, reclean the lot and resubmit the lot for reinspection. Printed wiring boards shall not be acceptable if the permanent solder mask coating has been applied to a contaminated surface. If an inspection lot is rejected for subgroup 2 or 3 tests, the manufacturer may screen (100 percent inspection) out the defective units (printed wiring boards or panels). Defective printed wiring boards shall not be shipped.

TABLE A–VII. In–process inspection.

| Inspection | Requirement paragraph | Method Paragraph | Sample size 1/ | Notes |
|---|---|---|---|---|
| Subgroup 1 | | | | |
| Material | A.3.4 | A.4.8.1.8 | See A.4.8.1.8 | |
| Ionic contamination (cleanliness) | A.3.7.3.1 | A.4.8.3.1 | Plan BN or TL | 2/ |
| Subgroup 2 | | | | |
| Conductor spacing | A.3.5.2.2 | A.4.8.1 | Plan BH | 2/ 3/ |
| Conductor width | A.3.5.2.3 | A.4.8.1 | Plan BH | 2/ 3/ |
| Conductor pattern imperfections | A.3.5.2.4 | A.4.8.1 | Plan BH | 2/ 3/ |

1/ See appendix C, table C–I for C = 0 sampling plans.
2/ Performed prior to solder mask application.
3/ Performed prior to lamination on each production lot.



Source: https://assist.dla.mil -- Downloaded: 2016-11-03T17:14Z
Check the source to verify that this is the current version before use.

A.4.6.2 Group A inspection. Group A inspection shall consist of the inspections specified in table A–VIII. The qualified manufacturer shall be responsible for completion of all group A inspections and shall be subject to loss of qualification for failure not to complete or to have completed all group A test and inspections.

A.4.6.2.1 Inspection lot. A group A inspection lot shall consist of the number of printed wiring boards fabricated from the same materials, using the same processing procedures, produced under the same conditions within a maximum period of 1 month and offered for inspection at one time.

A.4.6.2.2 Sampling procedures. Statistical sampling and inspection shall be in accordance with appendix C. For 100 percent inspection, all rejected units (printed wiring boards or panels of printed wiring boards) shall not be supplied on the contract. All sample units shall be chosen randomly. The following details on panel/test coupon sampling shall apply:

a. As-received condition microsection evaluations (see A.3.7.2.1):

(1) Types 2 and 5: The test specimen shall be test coupon "A". The number of sample units to be microsectioned shall be based on a statistical sample of panels in the lot in accordance with appendix C, table C–I, series L. The samples for the as-received condition and resistance to soldering heat testing shall be selected from different panels.

(2) Types 3 and 4: One "A" test coupon for each panel shall be microsectioned and inspected (see A.4.6.2.2.d.2). The orientation of the as-received condition microsection shall be orthogonal to the resistance to soldering heat microsection.

b. Solderability (see A.3.7.4.9):

(1) For Sequential Electrochemical Reduction Analysis (SERA), samples shall be selected in accordance with appendix E.

(2) For J–STD–003 class 3: When test coupon "S" is the test specimen, the number of sample units to be tested shall be based on a statistical sample of the number of panels in the lot in accordance with appendix C, table C–I, series L. When test coupon "A" is the test specimen, the number of sample units to be tested shall be based on the same statistical sample of test coupon "S", but a multiple of 4 shall be applied to the resulting sample size.

c. Resistance to soldering heat (solder float thermal stress) (see A.3.7.6.2).

(1) Types 1 and 5: The test specimen shall be test coupon "B". The number of sample units to be tested and inspected shall be based on a statistical sample of panels in the lot in accordance with appendix C, table C–I, series L. The samples for as-received condition and resistance to soldering heat testing shall be selected from different panels.

(2) Type 2: The test specimen shall be test coupon "B". The number of sample units to be tested and microsection inspected shall be based on a statistical sample of panels in the lot in accordance with appendix C, table C–I, series L.

(3) Types 3 and 4: The test specimen shall be test coupon "B". A minimum of one test specimen for each panel shall be tested and microsection inspected. Additional sample units shall be microsectioned based on a statistical sample of panels in the lot in accordance with appendix C, table C–I, series J. For designs with blind or buried vias, at least one additional test coupon "B" for each panel shall be subjected to the resistance to soldering heat test in accordance with A.4.8.6.2 and inspected to the requirements of A.3.7.2 for each additional copper plating process used (see A.6.12 for additional guidance).



Source: https://assist.dla.mil -- Downloaded: 2016-11-03T17:14Z
Check the source to verify that this is the current version before use.

d. Registration.

(1) Method I (types 1, 2, and 5 only): When method I is used, registration shall be evaluated using any combination of "A" test coupons taken from diagonal corners of the inspection panel.

(2) Method II (types 3 or 4 only): When method II is used, registration shall be evaluated using any combination of two microsectioned test specimens taken from diagonal corners of the inspection panel. Both sample units shall have been microsectioned in the vertical plane with one sample unit representing the panel's length (X) direction and the other representing the panel's width (Y) direction. Test coupons from the as-received condition (see A.3.7.2.1), resistance to soldering heat (see A.3.7.6.2) or when available, hole solderability (see A.3.7.4.9.1) verifications may be used.

(3) Method III: When method III is to be used, the number of sample units needed for verifying registration shall be documented in the qualifying activity approved alternate test plan (see C.5.2.2).

e. Copper plating voids (see A.3.6.7.3). When a single plating void that is within the acceptable limits of A.3.6.7.3 is present in a microsection or set of microsections representing an inspection panel, a referee sample unit from that panel shall be microsectioned and inspected for copper plating voids. The referee microsection shall be performed using an "A" or "B" test coupon from the opposite corner of the suspect panel. If the referee microsection has no plating voids, then that panel is acceptable, however, if a plating void is present in the referee microsection, that panel of printed wiring boards shall be rejected. Any plated-through hole in the microsection failing the plating void criteria specified in A.3.6.7.3 subparagraphs a, b, or c, shall be cause for the entire inspection panel of printed wiring boards associated with the microsection to be rejected.

A.4.6.2.3 Rejected lots. If an inspection lot is rejected, the manufacturer may rework it to correct the defects and resubmit the lot for reinspection, or screen out the defective units (if possible). Resubmitted lots shall be inspected using tightened inspection (see appendix C). Such lots (reworked or screened) shall be clearly identified as reinspected lots. Products which have failed any group A inspection and have not been reworked and have not passed reinspection (as specified in this appendix) may not be delivered as compliant printed wiring boards.

A.4.6.2.4 Disposition of sample units. Sample printed wiring boards which have passed all of group A inspection may be delivered if the inspection lot is accepted.



Source: https://assist.dla.mil -- Downloaded: 2016-11-03T17:14Z
Check the source to verify that this is the current version before use.

TABLE A–VIII. Group A inspection.

| Inspection | Requirement paragraph | Method paragraph | Test specimen 1/ | | | | | Sample plans 2/ |
|---|---|---|---|---|---|---|---|---|
| | | | T1 | T2 | T3 | T4 | T5 | |
| Visual and dimensional | | | | | | | | |
| Acceptability | A.3.7.1 | A.4.8.1 | PWB | PWB | PWB | PWB | PWB | Plan BH 3/ 4/ |
| Registration (method I) | A.3.5.6 | A.4.8.1.3 | 5/ | 5/ | | | 5/ | Plan BJ/TJ see 6/ |
| Microsection | | | | | | | | |
| As received | A.3.7.2.1 | A.4.8.2 | 6/ | 6/ | 6/ | 6/ | 6/ | See 6/ |
| Registration (method II) | A.3.7.2.2 | A.4.8.2.2 | | | 6/ | 6/ | | See 6/ and 7/ |
| Chemical | | | | | | | | |
| Resistance to solvents | A.3.7.3.2 | A.4.8.3.2 | 8/ | 8/ | 8/ | 8/ | 8/ | See 8/ |
| Physical | | | | | | | | |
| Adhesion, coverlayer | A.3.7.4.1 | A.4.8.4.1 | 9/ | 9/ | 9/ | 9/ | 9/ | See 9/ |
| Adhesion, legend | A.3.7.4.2 | A.4.8.4.2 | 10/ | 10/ | 10/ | 10/ | 10/ | See 10/ |
| Adhesion, plating | A.3.7.4.3 | A.4.8.4.3 | 11/ | 11/ | 11/ | 11/ | 11/ | Plan BH/TJ 3/ |
| Adhesion, solder mask | A.3.7.4.4 | A.4.8.4.4 | G | G | G | G | G | Plan TJ 12/ |
| Bow and twist | A.3.7.4.5 | A.4.8.4.5 | PWB | PWB | PWB | PWB | PWB | Plan BH 13/ |
| Solderability | | | | | | | | |
| Hole | A.3.7.4.9.1 | A.4.8.4.9.1 | | 13/ | 13/ | 13/ | | See 6/ 14/ |
| Surface | A.3.7.4.9.2 | A.4.8.4.9.2 | 14/ | 14/ | 14/ | 14/ | 14/ | Plan BH/TJ 6/ 15/ |
| Solder mask cure | A.3.7.4.10 | A.4.8.4.10 | | | | 15/ | | Plan TJ 16/ |
| Electrical | | | | | | | | |
| Circuit continuity | A.3.7.5.1.1 | A.4.8.5.1.1 | | | PWB | PWB | | 100 percent 17/ |
| Circuit shorts | A.3.7.5.1.2 | A.4.8.5.1.1 | | | PWB | PWB | | 100 percent 17/ |
| Environmental | | | | | | | | |
| Resistance to soldering heat | A.3.7.6.2.1 | A.4.8.6.2.1 | 6/ | 6/ | 6/ | 6/ | 6/ | See 6/ |

1/ T1 designates a type 1 design; T2 designates a type 2 design; T3 designates a types 3 design; T4 designates a type 4 design, and T5 designates a type 5 design; PWB means inspect the entire production printed wiring board, whereas an individual test coupon designation means inspect the specified test coupon. See appendix D herein for test coupon identification (name) translation to the applicable design standard.
2/ See appendix C, table C–I for C = 0 sampling plans and C.4.5 for examples.
3/ Some attributes may need to be inspected prior to lamination or solder mask application.
4/ The solder mask thickness test can be performed on either a test coupon at a sampling of TJ or production printed wiring board at a sampling of BH, manufacturer's option.
5/ Test coupon "A" or a production printed wiring board shall be used at the manufacturer’s option.
6/ See A.4.6.2.2 for sample size and test specimen.
7/ An optional method of verifying registration using test coupons (method III) is available. See A.4.8.2.2.2 for details.
8/ See A.4.8.3.2.1 for test specimen description and sample size.
9/ See A.4.8.4.1 for test specimen description and sample size.
10/ See A.4.8.4.2 for test specimen description and sample size.
11/ Test coupons "C", "M", or production printed wiring board.
12/ For printed wiring board designs using permanent solder mask on the production board. If the design does require solder mask, then the test does not need to be performed.



Source: https://assist.dla.mil -- Downloaded: 2016-11-03T17:14Z
Check the source to verify that this is the current version before use.

TABLE A–VIII. Group A inspection – Continued.

13/ Rigidized sections or stiffener portions only.
14/ Test coupon "A" or "S" shall be used at the manufacturer's option.
15/ For printed wiring boards using only surface mount lands for component attachment, the surface solderability test can be used in lieu of the hole solderability test.
16/ Test coupon "G" or "Y" shall be used at the manufacturer's option.
17/ Types 3 and 4 printed wiring boards only. NOTE: It is assumed that both continuity and circuit shorts can be visually verified for types 1, 2, and 5. If continuity and circuit shorts cannot be verified using visual inspection, then the production printed wiring boards shall be tested using a sample size in accordance with appendix C, table C–I, series H.

A.4.7 Periodic conformance inspection. Periodic conformance inspection shall consist of groups B and C inspection. Except where these inspections show noncompliance with the applicable requirements (see A.4.7.1.4 and A.4.7.2.4), delivery of printed wiring boards which have passed in-process and group A inspection shall not be delayed pending the results of these periodic inspections. Periodic inspections shall be performed at a certified suitable laboratory (see A.6.5).

A.4.7.1 Group B inspection. Group B inspection shall consist of the inspections specified in table A–IX.

A.4.7.1.1 Inspection lot. The sample units (printed wiring board test specimens) shall be randomly selected from the most complex printed wiring board (see A.7.2) inspection lot or lots that has passed all in-process and group A inspections during that production month (i.e., the group B reporting period). The most complex printed wiring boards shall be as determined by the manufacturer using its definition of complex (see A.7.2), subject to approval by the qualifying activity.

A.4.7.1.2 Sampling procedures. Sample units for each extent of qualification base material type family (see A.4.5.5.4) produced during that reporting period shall be subjected to group B inspection. Because of the performance nature of this document, the design details of the printed wiring boards represented by the sample units will need to be supplied to the testing facility (see A.6.7).

A.4.7.1.2.1 Sample unit selection. Except for the case of a 1 panel inspection lot, the sample units shall be selected from different panels. Unless otherwise specified in A.4.8.3.2 (resistance to solvents) or A.4.8.4.11 (surface peel strength), the following criteria shall be used in selecting samples for group B testing:

a. The sample units shall be from the most complex (see A.7.2) printed wiring board design produced that calendar month that allow for each test to be performed.

b. The sample units shall be randomly selected from panels which have passed group A inspection during that calendar month.

c. The sample units can be either:

(1) Two sets of quality conformance test circuitry, or

(2) Two test coupons for each test to be performed.

Eight foil lamination peel strength specimens shall be selected from two different production lots; four from each lot or 100 percent if the number of coupons available is less than four for a production lot. If only one foil laminated lot is produced in a calendar month, then only the test coupons from that lot shall be submitted.



Source: https://assist.dla.mil -- Downloaded: 2016-11-03T17:14Z
Check the source to verify that this is the current version before use.

A.4.7.1.3 Frequency. The frequency of selecting sample units and performing group B testing shall be on a monthly basis. The sample units shall be submitted for testing within 30 calendar days after the end of each reporting period.

A.4.7.1.4 Failures. If one or more sample units fail to pass group B inspection, the sample shall be considered to have failed. The qualifying activity shall be notified of any group B failure within 3 business days. Group B inspection shall be repeated on additional sample units (either all group B inspections or just the group B inspection which the original sample failed, at the discretion of the qualifying activity) from the next most complex (see A.7.2) inspection lot from the same month that the failure occurred. Group A inspection and shipment of the product represented by the failed group B sample shall be discontinued.

A.4.7.1.4.1 Corrective actions. Corrective actions shall be taken on the materials or processes, or both, as warranted, and on all units of product which can be corrected and which were manufactured under essentially the same conditions (materials, processes, and equipment), and which are considered subject to the same failure.

A.4.7.1.4.2 Noncompliance. If the lot or lots directly represented by the group B failure have been shipped, the manufacturer shall notify the acquiring activity of the failure and shall recall the affected lot or lots for reinspection, if possible. All other lots represented by extension of qualification by the failed group B sample are considered noncompliant until a sample from the next most complex (see A.7.2) inspection lot passes group B inspection.

A.4.7.1.4.3 Reinstitution of group A inspection. After successful completion of group B reinspection, group A inspection of product represented by the group B failure may be reinstituted.

A.4.7.1.5 Disposition of sample units. Sample units which have been subjected to group B shall be retained as specified in A.3.9.

TABLE A–IX. Group B inspection.

| Inspection | Requirement Paragraph | Method Paragraph | Test coupon by type 1/ | | Notes |
|---|---|---|---|---|---|
| | | | Types 1, 2 ,3, and 5 | Type 4 | |
| Subgroup 1 | | | | | |
| Resistance to solvents | A.3.7.3.2 | A.4.8.3.2 | 2/ | 2/ | 2/ |
| Rework simulation | A.3.7.4.8 | A.4.8.4.8 | 3/ | 3/ | 3/ |
| Moisture and insulation resistance | A.3.7.6.1 | A.4.8.6.1 | E | E | |
| Dielectric withstanding voltage | A.3.7.5.3 | A.4.8.5.3 | E | E | 4/ |
| Subgroup 2 | | | | | |
| Surface peel strength | A.3.7.4.11 | A.4.8.4.11 | | P | 5/ |

1/ See 1.2, 6.4.3, and A.3.1.1 herein.
2/ See A.4.8.3.2.1 for test specimen description and number of samples required.
3/ The holes to be tested and inspected shall represent component holes used for through–hole mounting. The test specimens shall be either test coupon "A" or holes from a production printed wiring board.
4/ Dielectric withstanding voltage shall be performed after the moisture and insulation resistance test on the same test coupon subjected to the moisture and insulation resistance test.
5/ Test coupon "P" is detailed in appendix H.



Source: https://assist.dla.mil -- Downloaded: 2016-11-03T17:14Z
Check the source to verify that this is the current version before use.

A.4.7.2 Group C inspection. Group C inspection shall consist of the inspections specified in table A–X for installation use A and B.

A.4.7.2.1 Inspection lot. The sample units (test coupons or production printed wiring boards) shall be randomly selected from the inspection lot that have passed all in-process and group A inspections during that reporting period.

A.4.7.2.2 Sampling procedures. The selection of sample units and testing shall be on an annual basis. Samples for each flexibility class (see 1.2.2) and each extent of qualification grouping based on the flexible base material type (see A.4.5.5.4) produced during that reporting period shall be subjected to group C inspection. If no printed wiring boards were produced during the reporting period, then group C inspection does not need to be performed.

Example: If both installation use A and B printed wiring boards were produced of adhesive flexible metal clad base material family and only class A printed wiring boards were produced using adhesiveless flexible metal clad base material family, then testing would be as follows:

a. Adhesive family: Both installation use A and B verification tests (folding flexibility and flex endurance) would need to be performed.

b. Adhesiveless family: Only installation use A verification test (folding flexibility) would need to be performed.

A.4.7.2.2.1 Sample unit selection. Unless otherwise specified, the following criteria shall be used in selecting samples for group C testing:

a. The sample units shall be for each class of product produced during that reporting period. NOTE: If only use A printed wiring boards were produced during the reporting period, then only use A needs to be tested.

b. The sample units shall be randomly selected from panels which have passed in-process and group A inspection during that inspection period.

c. The sample units can be either:

(1) Two test coupons or sets of quality conformance test circuitry, or

(2) Two printed wiring boards for each test to be performed.

A.4.7.2.3 Frequency. The frequency of group C testing shall be annually. The sample units shall be submitted for testing within 30 calendar days after the end of each reporting period.

TABLE A–X. Group C inspection.

| Inspection | Requirement paragraph | Method paragraph | Test specimen 1/ |
|---|---|---|---|
| Flexibility endurance (use B) | A.3.7.4.6 | A.4.8.4.6 | PWB or 2/ |
| Folding flexibility (use A) | A.3.7.4.7 | A.4.8.4.7 | PWB or 3/ |

1/ See 1.2, 6.4.2, and A.3.1.1 herein.
2/ A suitable single–sided portion of a type 3, 4, or 5 production printed wiring board or the test specimen described in the applicable test method.
3/ A suitable portion of a production printed wiring board or the test coupon described in appendix H.



Source: https://assist.dla.mil -- Downloaded: 2016-11-03T17:14Z
Check the source to verify that this is the current version before use.

A.4.7.2.4 Noncompliance. If one or more sample units fail to pass group C inspection, the manufacturer shall notify the qualifying activity of such failure within 3 business days. The manufacturer shall take corrective action on the materials or processes, or both, as warranted, and on all units of product which can be corrected and which were manufactured under essentially the same conditions (materials, processes, and equipment) and which are considered subject to the same failure. If the lot or lots directly represented by the group C failure have been shipped, the manufacturer shall notify the acquiring activity of the failure and shall recall the affected lot or lots for reinspection, if possible. All other lots represented by extension of qualification by the failed group C sample are considered noncompliant until a sample passes group C inspection. Group A inspection and shipment of the product shall be discontinued until corrective action, acceptable to the qualifying activity, has been taken. After the corrective action has been taken, group C inspection shall be repeated on additional sample units (all inspections, or the inspection which the original sample failed, at the discretion of the qualifying activity). Group A inspection may be reinstituted; however, final acceptance and shipment shall be withheld until the group C inspection has shown that the corrective action was successful.

A.4.7.2.5 Disposition of sample units. Sample units which have been subjected to group C shall be retained as specified in A.3.9.

A.4.8 Methods of inspection. The following verification tests and test methods assure printed wiring board integrity within typical operating conditions and applications. Alternate methods are allowed with prior approval by the qualifying activity. The test methods described herein are the preferred methods and shall be the referee method in case of dispute when alternate test methods result in differing or conflicting results.

A.4.8.1 Visual and dimensional inspection. The visual and dimensional features of the printed wiring board test specimen shall be inspected using either test method number 2.2.1 or 2.2.2 of IPC-TM-650, as applicable. Unless otherwise specified, the magnifications in table A–XI shall be used for the conductor width or land diameter/width of features under inspection. Referee inspection needed to confirm a suspected defect of the specimen features shall be accomplished at a magnification of up to 40X, as applicable to confirm the suspected defect. Characteristics not observable through solder mask shall be evaluated prior to its application to the surface of the printed wiring board (see A.4.6.1). Verification of printed wiring board dimensional parameters using automated inspection technology (AOI and AXI) shall be acceptable.

TABLE A–XI. Inspection magnification.

| Conductor width or land diameter/width | Magnification 1/ | | IPC–OI–645 grade |
|---|---|---|---|
| | Standard inspection | Referee inspection | |
| Greater than .04 inches (1.0 mm) | 1.75 x | 4x | IV & V |
| From .02 to .04 inches (0.5 to 1.0 mm) | 4x | 10x | V & VI |
| From .001 to .02 inches (0.25 to 0.5 mm) | 10x | 20x | VI & VII |
| Less than .001 inches (0.25 mm) | 20x | 40x | VII & VIII |

1/ Referee conditions are used to verify printed wiring boards rejected at the standard inspection magnification power. For printed wiring board designs with mixed conductor and land diameters and widths, the greater magnification power may be used for the inspection of the entire printed wiring board.



Source: https://assist.dla.mil -- Downloaded: 2016-11-03T17:14Z
Check the source to verify that this is the current version before use.

A.4.8.1.1 Annular ring, external (see A.3.5.2.1). The measurement of the annular ring on external layers is from the inside surface (within the hole) of the plated hole or unsupported hole to the outer edge of the annular ring on the surface of the printed wiring board. See figure F–2 for illustration.

A.4.8.1.2 Overall printed wiring board thickness (see A.3.5.3). Unless otherwise specified, the overall printed wiring board thickness measurement shall be inspected by any micrometer or by microsection in accordance with A.4.8.2.

A.4.8.1.2.1 With edge-board contacts. Unless otherwise specified, printed wiring boards with edge-board contacts shall have the overall thickness measured from top to bottom of the printed wiring board on the final finish plated surfaces of opposite contacts.

A.4.8.1.2.2 Without edge-board contacts. Unless otherwise specified, printed wiring boards without edge-board contacts shall have the overall thickness measured across the board from plated copper surface to plated copper surface not including the final finish plating.

A.4.8.1.3 Registration, external (method I) (types 1 and 2) (see A.3.5.6). Registration of type 1 and type 2 printed wiring boards shall be satisfied if the outer layers meet the external annular ring (see A.3.1.1 and A.3.5.2.1) and hole pattern accuracy (see A.3.1.1 and A.3.5.4) requirements.

A.4.8.1.4 Solder mask thickness (see A.3.5.7). The measurement of the solder mask thickness shall be inspected by any micrometer or by microsection in accordance with A.4.8.2.

A.4.8.1.5 Product identification (marking and traceability). The printed wiring board specimen shall be inspected in accordance with test method number 2.1.8 of IPC-TM-650, except that the magnification shall be 1.75X (3 diopters), minimum.

A.4.8.1.6 Alternate plating and coating measurement techniques. When a conductor surface finish plating or coating thickness is less than .00005 inch (0.00125 mm), the verification of thickness shall be performed in accordance with one of the following test methods:

a. ASTM B567, measurement of thickness by the beta backscatter method.

b. ASTM B568, measurement of thickness by X-ray spectrometry.

A.4.8.1.7 Wire bond pad surface roughness. The printed wiring board specimen shall be inspected in accordance with test method number 2.4.15 of IPC-TM-650. Only the pristine area of the terminal shall be evaluated.

A.4.8.1.8 Materials inspection. Prior to any fabrication, materials inspection shall consist of certification supported by verification data, which verifies that the materials specified (see A.3.1.1) used in fabricating the printed wiring boards are in accordance with the applicable referenced specifications or requirements specified. Unless otherwise specified, verifying data does not need to be submitted to the qualifying activity or acquiring activity, but shall be made available upon request.

A.4.8.1.9 Workmanship. The printed wiring board specimen shall be inspected in accordance with test method number 2.1.8 of IPC-TM-650, except that the magnification shall be 1.75X (3 diopters), minimum.



Source: https://assist.dla.mil -- Downloaded: 2016-11-03T17:14Z
Check the source to verify that this is the current version before use.

A.4.8.2 Microsection inspection. Microsection inspections (to evaluate characteristics such as plated-through holes, plating thickness, or foil thickness) shall be accomplished by using the following preparation and inspection methods.

a. Microsection preparation. Microsection preparation shall be accomplished by using methods in accordance with either test method numbers 2.1.1 or 2.1.1.2 of IPC-TM-650. Automatic microsectioning techniques may be used in lieu of test methods 2.1.1 or 2.1.1.2 of IPC-TM-650. The following details shall apply:

(1) Number of holes for each specimen. A minimum of three plated holes cross sectioned vertically shall be made for each printed wiring board test specimen required. Each side of the three plated holes shall be viewed independently.

(2) Accuracy. All three plated holes of each printed wiring board test specimen shall be sectioned, ground, and polished to within ±10 percent of the center of the drilled diameter of the hole.

(3) Pre–microetch evaluations. The printed wiring board test specimens shall be evaluated for plating separations, superfluous copper, and wicking prior to microetching.

(4) When more than two printed wiring board test specimens are contained in a mount (coupon–stacking or gang mounting), the following shall apply:

(a) The printed wiring board test specimens shall not be in direct contact with any other printed wiring board test specimen in the mount. The recommended minimum distance between printed wiring board test specimens in a mount is .010 inch (0.25 mm).

(b) The traceability requirements of A.3.9.1 shall apply.

b. Microsection examination and inspection. Microsection examination and inspection shall be accomplished in accordance with test method number 2.2.5 of IPC-TM-650 to evaluate characteristics such as dielectric spacing, etchback, plating thickness, foil thickness, and other characteristics, in plated holes. If more than three plated holes are on a printed wiring board test specimen, all holes shall be evaluated. The following details shall apply:

(1) Magnifications. The printed wiring board test specimens shall be inspected at the magnifications specified in test method number 2.2.5 of IPC-TM-650.

(2) Evaluations. Pre– and post–microetch evaluations for the criteria of A.3.6 shall be accomplished at magnifications specified above. The printed wiring board test specimens shall be evaluated for plating separations, superfluous copper, and wicking both prior and after to microetching.

(3) Measurements. Measurements shall be averaged from at least three determinations for each side of each plated-through hole of each test specimen. The copper plating thickness of the plated-through hole wall shall be determined from the average of three measurements, approximately equally spaced, taken on each side of the plated-through hole. Isolated thick or thin sections shall not be used for averaging; however, isolated areas of reduced copper thickness shall be measured and evaluated to the copper plating void rejection criteria specified in A.3.6.7.3.

c. Plating and coatings that are less than .00005 inch (0.00125 mm) in thickness shall not be measured using metallographic techniques. The plating and coating thickness shall be evaluated using the alternate measurement techniques of A.4.8.1.6.



Source: https://assist.dla.mil -- Downloaded: 2016-11-03T17:14Z
Check the source to verify that this is the current version before use.

A.4.8.2.1 Plated-through hole inspection (see A.3.6). When printed wiring board test specimens are inspected in accordance with A.4.8.2, the following details shall apply:

a. Dielectric layer thickness (see A.3.6.1.5). The dielectric layer thickness shall be inspected between all conductor layers present in the printed wiring board test specimen.

b. Thermal planes (see A.3.6.1.6). The lateral dielectric spacing between the heat sinking planes and adjacent conducting surfaces (nonfunctional lands) or plated-through holes shall be measured at the closest point between these surfaces or the plated-through hole.

c. Plating and coating thickness (see A.3.6.2.5 and A.3.6.7). Isolated thick or thin sections shall not be used for averaging. However, isolated areas of reduced copper thickness shall be measured for compliance with the requirements of A.3.6.7.2.

d. Copper plating voids (see A.3.6.7.3). When a single plating void that is within the acceptable limits of A.3.6.7.3 is present in a microsection, the sampling procedures of A.4.6.2.2.e shall apply for group A verifications. Any plated-through hole in the microsection failing the plating void criteria specified in A.3.6.7.3 subparagraphs a, b or c, shall be cause for the entire panel of printed wiring boards associated with the microsection to be rejected. For group B inspections, see A.4.7.1.4.

e. Annular ring, internal (see A.3.6.4.1). This measurement shall apply to all internal lands for all plated through-holes in the cross section.

A.4.8.2.2 Registration (types 3 and 4). Layer-to-layer registration of multilayered printed wiring boards shall be determined by either evaluating microsectioned test coupons (method II, see A.4.8.2.2.1) or by evaluating of special registration coupons when provided (method III, see A.4.8.2.2.2).

A.4.8.2.2.1 By microsection (method II). Method II registration of printed wiring boards shall be satisfied if all layers meet the annular ring and hole pattern accuracy requirements specified (see A.3.1.1). Registration shall be evaluated using any combination of the 'as received' (see A.3.7.2.1) and or 'resistance to soldering heat' (see A.3.7.6.2) microsectioned printed wiring board test specimens taken from diagonal corners of the panel. Both printed wiring board test specimens shall have been microsectioned in the vertical plane with one printed wiring board test specimen representing the panel's length (X) direction and the other representing the panel's width (Y) direction.

A.4.8.2.2.2 By registration test coupons (method III) (optional). Registration test coupons and techniques, when provided by the printed wiring board fabricator, shall be evaluated in accordance with methods approved by the qualifying activity and when applicable, the acquiring activity. Unapproved methods of measurement using registration test coupons shall be backed up by method II of A.4.8.2.2.1 using the appropriate test coupons (see table A–VIII) from the same panel.



Source: https://assist.dla.mil -- Downloaded: 2016-11-03T17:14Z
Check the source to verify that this is the current version before use.

A.4.8.3 Chemical inspection.

A.4.8.3.1 Ionic contamination (by resistivity of solvent extract) (see A.3.7.3.1 and A.6.4). The printed wiring board shall be inspected for ionic contamination in accordance with test method number 2.3.25 of IPC-TM-650.

A.4.8.3.2 Resistance to solvents (marking ink or paint) (see A.3.7.3.2). Marking ink or paint resistance to solvents shall be inspected in accordance with test method number 2.3.4 of IPC-TM-650. The following details apply:

a. The marked portion of the printed wiring board test specimen shall be brushed.

b. After the test, the printed wiring board test specimen shall be visually inspected in accordance with A.4.8.1 for legibility of marking.

A.4.8.3.2.1 Sampling procedures and test specimens. The resistance to solvents test shall be performed either during group A (every lot) or during group B (monthly). The minimum number of sample units tested shall be at least one sample unit for each solution specified by the applicable test method (i.e., one sample unit for each solution required). The printed wiring board test specimen shall be as described in appendix H.

A.4.8.4 Physical inspections.

A.4.8.4.1 Adhesion, cover material (see A.3.7.4.1). The adhesion and permanency of cured cover materials on printed wiring board test specimens shall be determined in accordance with test method number 2.4.28.1 of IPC-TM-650. The printed wiring board test specimen shall be as described in appendix H.

A.4.8.4.2 Adhesion, legend and marking (see A.3.7.4.2). The printed wiring board test specimen shall be inspected in accordance with test method number 2.4.1.1 of IPC-TM-650. The printed wiring board test specimen shall be as described in appendix H.

A.4.8.4.3 Adhesion, plating (see A.3.7.4.3). The printed wiring board test specimen shall be inspected in accordance with test method number 2.4.1 of IPC-TM-650, with the following details and exceptions. When edge board contacts are part of the conductor pattern, at least one pull shall be on the contacts. Fresh tape shall be used for each pull. If overhang metal (slivers) breaks off and adheres to the tape, it is evidence of outgrowth, but not a plating adhesion failure.

A.4.8.4.4 Adhesion, solder mask (see A.3.7.4.4). The printed wiring board test specimen shall be inspected for permanency and adhesion of cured solder mask in accordance with test method number 2.4.28.1 of IPC-TM-650.

A.4.8.4.5 Bow and twist (see A.3.7.4.5). The printed wiring board test specimen shall be inspected for bow and twist in accordance with test method number 2.4.22 of IPC-TM-650.

A.4.8.4.6 Flexibility endurance (see A.3.7.4.6). The printed wiring board test specimen shall be inspected for flexibility endurance in accordance with test method number 2.4.3 of IPC-TM-650. The flexibility endurance test may also be performed using an alternate method specified in A.6.6.1. The following exceptions to the test shall apply:

a. Number of flex cycles: 100,000 cycles.

b. Mandrel size (when applicable): The mandrel size for printed wiring board types 1 and 2 shall be 12 times the sum of the total ply thickness reduced to the nearest .125 inch (3.18 mm). The mandrel size for printed wiring board types 3, 4, and 5 shall be 24 times the sum of the total ply thickness reduced to the nearest .125 inch (3.18 mm). The mandrel shall not be less than .125 inch (3.18 mm).



Source: https://assist.dla.mil -- Downloaded: 2016-11-03T17:14Z
Check the source to verify that this is the current version before use.

A.4.8.4.6.1 Test specimens. The printed wiring board test specimens shall be as described in appendix H.

A.4.8.4.7 Folding flexibility (see A.3.7.4.7). The folding flexibility test shall be performed by subjecting the printed wiring board test specimen to fold cycles as described below and as depicted on figure A–1. The specified number of fold cycles shall be performed with the mandrel placed in contact with the printed wiring board test specimen on one side and then again with the mandrel placed in contact with the printed wiring board test specimen on the opposite side. After completion of the specified number of fold cycles, both directions, the printed wiring board test specimen shall be tested for electrical defects in accordance with A.3.7.5.1.

A.4.8.4.7.1 Test specimens. The printed wiring board test specimen shall be as described in appendix H.

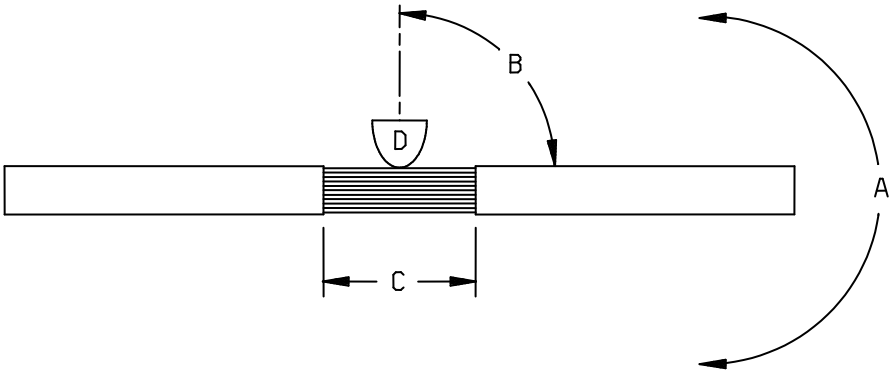


NOTES:

a. Direction of bend (detail A).
b. Degree of bend (detail B).
c. Points of application (detail C).
d. Diameter of mandrel (detail D).

FIGURE A–1. Folding flexibility.

A.4.8.4.8 Rework simulation.

A.4.8.4.8.1 Unsupported hole (see A.3.7.4.8.1). The printed wiring board test specimen shall be inspected in accordance with test method number 2.4.21 of IPC-TM-650 with the following details and exceptions. Three holes for each printed wiring board test specimen shall be tested. Insert wires in holes in selected lands and solder to lands by machine or hand, as applicable. The insert wire lead shall have a diameter so that the diameter of the hole will be at a maximum of .020 inch (0.51 mm) greater than the diameter of the inserted wire lead. The wires shall not be clinched. It shall be considered a failure when a land around an unsupported hole is loosened.



Source: https://assist.dla.mil -- Downloaded: 2016-11-03T17:14Z
Check the source to verify that this is the current version before use.

A.4.8.4.8.2 Plated-through hole (see A.3.7.4.8.2). Rework simulation of plated-through holes shall be tested in accordance with test method number 2.4.36 of IPC-TM-650. The following details shall apply:

a. Unless otherwise specified, method A shall be used initially.

b. For designs with an overall printed wiring board thickness greater than .120 inch (3.0 mm), one row of plated-through holes shall be used to assure that the pre-designated method to be used for the soldering and de–soldering operation will produce satisfactory solder connections for the printed wiring board test specimen design being tested. A satisfactory solder connection is when the wire is wetted through the entire plated hole within the soldering time limit specified in the test method. An unsatisfactory solder connection is when an insufficient solder connection is produced or the soldering time exceeds the limit specified in the test method.

c. In case of an unsatisfactory solder connection, another plated-through hole on the row shall be soldered using the soldering temperature of the next higher method (for example, method B if method A is insufficient, or method C if method B does not suffice) until a satisfactory solder connection is made. If the temperatures of method C still yields unsatisfactory solder connections, consult the qualifying activity for additional guidance before proceeding further with the testing.

d. Once a method that produces satisfactory solder connections has been determined, the soldering and de-soldering operation shall proceed using a different row of plated-through holes which will be evaluated to the acceptance criteria of A.3.7.4.8 herein. The final test method used shall be noted in the test report.

A.4.8.4.9 Solderability (see A.3.7.4.9). The default category of coating durability of J–STD–003 is category 2. When specified (see A.3.1.1), accelerated conditioning for coating durability shall be in accordance with J–STD–003. For printed wiring boards using only surface mount components, the surface solderability test can be used in lieu of the hole solderability test. For mixed component designs (both surface mount and through hole attachment), unless otherwise specified, only the hole solderability test shall be performed.

A.4.8.4.9.1 Hole (plated-through hole) (see A.3.7.4.9.1). The printed wiring board test specimens shall be inspected in accordance with J–STD–003 class 3 or appendix E.

A.4.8.4.9.2 Surface or surface mount land (see A.3.7.4.9.2). The printed wiring board test specimens shall be inspected in accordance with J–STD–003 class 3 or appendix E.

A.4.8.4.10 Solder mask cure (see A.3.7.4.10). The printed wiring board test specimens shall be inspected for cured of solder mask in accordance A.4.8.1.

A.4.8.4.11 Surface peel strength (types 3 and 4 using foil lamination) (see A.3.7.4.11). The printed wiring board test specimen shall be tested and inspected in accordance condition A of test method number 2.4.8 of IPC-TM-650. Conditions B and C (after resistance to soldering heat and after exposure to processing chemicals) shall not be performed. All surface finish plating or coatings (for example, plated tin-lead, solder coating, ENIG, OSP, and others) shall be chemically removed prior to test or shall be prevented from being deposited during manufacturing. The printed wiring board test specimen shall not be coated with any organic coating for test. No individual value in the calculation of the average peel strength shall be less than 1.5 pounds of the specified minimum value for each inch (0.26 N/mm) of width.

A.4.8.4.11.1 Test specimens. The printed wiring board test specimen shall be as described in appendix H.



Source: https://assist.dla.mil -- Downloaded: 2016-11-03T17:14Z
Check the source to verify that this is the current version before use.

A.4.8.5 Electrical inspection.

A.4.8.5.1 Continuity and circuit shorts.

A.4.8.5.1.1 Production screening. Printed wiring boards shall be electrical tested using either automatic or manual equipment capable of verifying the level B requirements of IPC–9252 for 100 percent continuity and isolation.

A.4.8.5.1.2 Qualification and referee testing.

A.4.8.5.1.2.1 Circuit continuity (see A.3.7.5.1.1). A current shall be passed through each net by applying electrodes on the terminals at each end of the net. The current passed through the net shall not exceed those specified in the applicable design standard (see A.3.1.1 and appendix D) for the smallest conductor in the circuit. For manual testing during qualification, the current shall be 1.0 amp minimum and shall be applied for a minimum of 5 seconds.

A.4.8.5.1.2.2 Circuit shorts (isolation resistance) (see A.3.7.5.1.2). A test voltage shall be applied between each net and all other nets that are adjacent to the net under test. The voltage shall be applied between nets of each layer and the electrically isolated net of each adjacent layer. For manual testing the voltage shall be 200 volts minimum and shall be applied for a minimum of 5 seconds. When automated test equipment is used, the minimum applied test voltage shall be as specified on the applicable master drawing. If a test voltage of the printed wiring board is not specified on the applicable master drawing, the test voltage shall be the maximum rated voltage of the net being tested. If no maximum rated voltage is specified, the minimum test voltage shall be 40 volts.

A.4.8.5.2 Circuit or plated-through hole short to metal core substrate (see A.3.7.5.2). A polarizing voltage of 500 volts shall be applied between conductors and or lands and the metal core substrate in a manner such that each conductor and or land is tested to the conditions of A.4.8.5.1.2.2.

A.4.8.5.3 Dielectric withstanding voltage (see A.3.7.5.3). The printed wiring board test specimen shall be tested in accordance with test condition B of test method number 2.5.7 of IPC-TM-650. The following details and exceptions apply:

a. Test specimen: The printed wiring board test specimen shall be as identified in table A–VI or table A–IX.

b. Magnitude of test voltage: Condition B (1,000 V dc +25 V dc, –0 V dc).

c. Duration of application of test voltage: 30 seconds +3, –0 seconds.

d. Points of application: The dielectric withstanding voltage shall be applied between all common portions of each conductor pattern and all adjacent common portions of each conductor pattern. The voltage shall be applied between conductor patterns of each layer and the electrically isolated pattern of each adjacent layer.

A.4.8.5.4 Impedance testing (see A.3.7.5.4). Impedance testing shall address the parameters required by the level C requirements of IPC–9252.



Source: https://assist.dla.mil -- Downloaded: 2016-11-03T17:14Z
Check the source to verify that this is the current version before use.

A.4.8.6 Environmental inspection.

A.4.8.6.1 Moisture and insulation resistance (see A.3.7.6.1). The printed wiring board test specimen shall be tested in accordance with test method number 2.6.3 of IPC-TM-650, class 3, using test specimen preparation method A. The initial and final resistance measurements shall be taken at 500 V dc, +25 V dc, –0 V dc).

A.4.8.6.2 Resistance to soldering heat.

A.4.8.6.2.1 Solder float thermal stress (single side, single cycle, component holes) (see A.3.7.6.2). The printed wiring board test specimen shall be inspected for solder float thermal stress in accordance with test method number 2.6.8 of IPC-TM-650. The following details shall apply. Printed wiring board test specimens constructed of adhesiveless metal-clad flexible base materials shall be subjected to test condition A. Printed wiring board test specimens constructed of adhesive flexible metal-clad base materials shall be subjected to test condition B.

A.4.8.6.3 Thermal shock (see A.3.7.6.3). The printed wiring board test specimen shall be tested in accordance with test method number 2.6.7.2 of IPC-TM-650, test condition D.

A.5. PACKAGING

A.5.1 Packaging. For acquisition purposes, the packaging requirements shall be as specified in the contract or order (see A.6.2). When packaging of materiel is to be performed by DoD or in-house contractor personnel, these personnel need to contact the responsible packaging activity to ascertain packaging requirements. Packaging requirements are maintained by the Inventory Control Point's packaging activities within the Military Service or Defense Agency, or within the Military Service's system commands. Packaging data retrieval is available from the managing Military Department's or Defense Agency's automated packaging files, CD-ROM products, or by contacting the responsible packaging activity.

A.6. NOTES

(This section contains information of a general or explanatory nature that may be helpful, but is not mandatory.)

A.6.1 Intended use. This appendix is intended to be used by manufacturers not certified to the QML printed board specification, MIL-PRF-31032. This appendix is not a duplicate or look-alike of any MIL-PRF-31032 specification sheet, and most of the historic performance and verification requirements are still contained in this appendix. However, many of the enhanced acceptance criteria or methods developed for MIL-PRF-31032 specification sheets have been added as the baseline or are available as an option.

A.6.2 Acquisition requirements.

A.6.2.1 Primary acquisition requirements. Acquisition documents should specify the following:

a. Title, number, revision letter (with any amendment number when applicable), and date of this specification.

b. Packaging requirements (see A.5.1).

c. Appropriate printed wiring board type (see 1.2.1), installation use (see 1.2.2), and rework capability grade (see 1.2.3).

d. Title, number, revision letter (with any engineering change proposal or notice of revision number when applicable), and date of the applicable master drawing (see A.3.1.1).



Source: https://assist.dla.mil -- Downloaded: 2016-11-03T17:14Z
Check the source to verify that this is the current version before use.

e. Title, number, revision letter (with any notice number when applicable), and date of the applicable design standard (see A.3.3).

f. Part identification (if applicable), and marking instructions including size, location, and application method (see A.3.1.1 and A.3.8).

g. Whether microsectioned printed wiring board test specimens, sample units or photographs are required to be delivered with the order.

A.6.2.2 Additional acquisition requirements. Acquisition documents should also specify the following data, if applicable:

a. Verification Conformance Inspection option (if other than option 4) (see appendix D).

b. Design related, if different than the applicable design standard (see appendix D).

(1) Minimum annular ring (external or internal) (see A.3.1.1), if different than the applicable design standard.

(2) Minimum conductor width (see A.3.1.1), if different than the applicable design standard.

(3) Minimum conductor spacing (see A.3.1.1), if different than the applicable design standard.

(4) Minimum dielectric thickness (see A.3.1.1), if different than the applicable design standard.

(5) Minimum edge spacing requirement (see A.3.1.1), if different than the applicable design standard.

(6) Copper plating thickness (see A.3.1.1), if different than the applicable design standard.

(7) Conductor finish plating (see A.3.1.1), if other than solder coating or tin-lead.

c. Level of ionic contamination (see A.3.7.3.1).

d. Electrical test requirements (see A.3.7.5.1 and A.3.7.5.4).

e. Surface peel strength (foil lamination), if applicable (see A.3.7.4.11).

f. Non-delivery of sample units which have not been subjected to electrical testing (continuity and circuit shorts tests) and have passed all other tests to groups A and B inspection.

g. Contamination (organic) (see A.3.7.3.1 and A.6.4).

h. If special, or other identification, marking is required (see A.3.8).



Source: https://assist.dla.mil -- Downloaded: 2016-11-03T17:14Z
Check the source to verify that this is the current version before use.

A.6.3 Qualification.

A.6.3.1 Qualification test specimens. The requirements for qualification test specimens are now contained in the notes of DSCC Form 19W. In addition, the holes and patterns of zone C (except for test coupon E–5) of the qualification master drawing are required to be present on the qualification test specimen and are required for qualification testing.

A.6.3.2 Transference of qualification. Manufacturers currently qualified to MIL-P-50884D will have their qualification transferred to this document. The expiration date of their current qualification will not be changed. Qualifications in process (before the date of this document) will be performed to the specification revision and amendment listed on the approved DSCC Form 19W. New applications for qualification (after the date of this document) should be performed to the requirements of this amendment.

A.6.3.3 Qualification expiration and Qualified Products Database (QPD) 50884. Qualification listings within QPD–50884 for manufacturers qualified under this appendix (QPL product assurance level) includes the qualification expiration date as the last six digits of the test reference number. This date, formatted as (month/day/year), is the actual qualification expiration date for that listing. This date signifies that the company is no longer qualified (unless notified in writing by the qualifying activity) whether or not that individual listing has been removed the QPD. If the company has not requalified before the next issue of the QPD is published, then the listing will not be included on the QPD.

A.6.4 Ionic contamination testing (surface cleanliness). The values of ionic contamination specified in this document were established in the late 1970's by the U.S. Navy with the issuance of the Naval Air Center Materials Research Report No. 3-78. The values used in the report were eventually used in the canceled specification MIL-P-28809 as a baseline needed for completed assemblies. The chemistries of the fluxes and cleaning solutions used in the 1970's were very different than what is used currently. If levels of ionic contamination that are needed for today's circuit card assemblies may be well below that threshold established in Naval Air Center Materials Research Report No. 3-78 or allowed by this specification.

A.6.4.1 Flux removal. Selection of procedures for flux removal is at the manufacturer's discretion. A procedure should be chosen which will enable the printed wiring board fabricator to produce results enabling compliance with this document. Both polar and nonpolar solvents may be required to effect adequate flux removal.

A.6.4.2 Alternate methods and equipment. The following methods of determining the cleanliness of printed wiring boards have been shown to be equivalent to the sodium chloride equivalent ionic contamination test method:

a. The Kenco Alloy and Chemical Company, Incorporated, "Omega Meter™, Model 200" (see http://www.scscoatings.com).

b. Alpha Metals Incorporated, "Ionograph™" (see http://www.scscoatings.com).

c. Zero Systems, Incorporated, "Zero Ion™, Model ZI-100."

d. Westek, "ICOM 5000™."

Table A–XII list the equivalence factors for these methods in terms of micrograms equivalents of sodium chloride for each unit area.



Source: https://assist.dla.mil -- Downloaded: 2016-11-03T17:14Z
Check the source to verify that this is the current version before use.

TABLE A–XII. Equivalence factors.

| Method | Equivalence factors | Equivalents of sodium chloride | | Related IPC-TM-650 test method |
|---|---|---|---|---|
| | | Micrograms per square inch | Micrograms per square cm | |
| Resistivity of solvent extract | 1.00 | 10.06 | 1.56 | 2.3.25 |
| Omega meter™ | 1.39 | 14.00 | 2.20 | 2.3.25 |
| Ionograph™ | 2.01 | 20.00 | 3.10 | 2.3.25 |
| Zero ion™ | 3.68 | 37.00 | 5.80 | N/A |
| ICOM 5000™ | 2.20 | 22.00 | 3.40 | N/A |

A.6.5 Certified suitable laboratories (acceptable to the Government). Government accepted test laboratories are those facilities that have demonstrated their ability to perform the verification test required by this document. Levels of acceptance include group A, group B, group C, and qualification testing.

A.6.6 Alternate test methods (see C.5.2.2). Other test methods may be substituted for those specified herein provided it is demonstrated to and approved by the qualifying activity that such a substitution in no way relaxes the requirements of this appendix.

A.6.6.1 Flexibility endurance (see A.4.8.4.6). The flexibility endurance test may be performed using the alternate test procedure detailed in test method number 2.4.3.1 of IPC-TM-650.

A.6.7 Group B sample critical design details. Past versions of this document contained default design details that were assumed to apply to all test coupons subjected to group B inspection, regardless of the master drawing design requirements. With the issuance of revision D of this document, the design details which were universally used to determine acceptance or failure of the group B samples, are no longer considered universally applicable to the group B test coupons. The printed wiring board design details (plating thickness, dielectric separation, external annular ring, internal annular ring, and other design criteria) or the default design standard that applies to the test coupons, should be submitted along with test coupons so that a proper group B evaluation of the design can be completed.

EXAMPLE: The master drawing of the most complex design selected for group B testing requires .003 inch (0.08 mm) of copper plating thickness, .006 inch (0.15 mm) of dielectric spacing, and .005 inch (0.13 mm) internal annular ring. These design details are considerably different than the baseline design parameters found in either IPC–2223 or IPC–2221. If on these same samples, the group B test laboratory found that the samples exhibited .002 inch (0.05 mm) of copper plating thickness, .005 inch (0.13 mm) of dielectric spacing and .004 inch (0.10 mm) internal annular ring, the test laboratory could not claim, state, or certify that the results of group B testing or the samples met the specification requirement.

A.6.8 Tin finishes (see A.3.4.1). The use of alloys with tin content greater than 97 percent may exhibit tin whisker growth problems after manufacture. Tin whiskers may occur anytime from a day to years after manufacture, and can develop under typical operating conditions on products that use such materials. Tin whisker growth could adversely affect the operation of electronic equipment systems. Conformal coatings applied over top of a whisker-prone surface will not prevent the formation of tin whiskers. Alloys of 3 percent lead have shown to inhibit the growth of tin whiskers. For additional information on this matter refer to ASTM B545.

A.6.9 DSCC Form 19W. Copies of DSCC Form 19W, "PWB-QPL Application/Authorization to Test" may be obtained at URL http://www.dscc.dla.mil/offices/sourcing_and_qualification/ or upon application to DSCC–VQE, P.O. Box 3990, Columbus, OH 43216-5000.



Source: https://assist.dla.mil -- Downloaded: 2016-11-03T17:14Z
Check the source to verify that this is the current version before use.

A.6.10 Alternate microsection preparation procedure guidelines. IPC–MS–810 "Guidelines for High Volume Microsection" contains many recommendations and suggestions that can be helpful in preparing microsection mounts containing multiple printed wiring board test specimens.

A.6.11 Microsection mount microetch caution. Prior to microetching, if lines are visible in the areas of inner layer to hole wall interfaces, care should be taken to not over-etch the mount so that the various plating layers will still be visible in the etched mount. This will enable accurate determination as to whether the line is separation or a polishing artifact.

A.6.12 Blind, buried, and through vias. This specification includes provisions for verifying the performance of rigid printed wiring boards containing blind vias, buried vias, controlled depth drilled vias, laser drilled vias, low aspect ratio blind vias, microvias, semi-blind vias, semi-buried vias, and through vias.

A.6.13 Stiffener adhesion test and requirement. This document does not include the stiffener adhesion test or requirement contained in MIL–P–50884C. All stiffeners are viewed as a mechanical support and total bonding of the stiffener to the printed wiring board is not required for compliance with this document.

A.6.14 Referenced IPC–TM–650 test methods. The following test method numbers are referenced in this document:

2.1.1, Microsectioning.
2.1.1.2, Microsectioning—Semi or Automatic Technique Microsection Equipment (Alternate).
2.1.8, Workmanship.
2.2.1, Mechanical Dimensional Verification.
2.2.2, Optical Dimensional Verification.
2.2.5, Dimensional Inspections Using Mircosections.
2.3.4, Chemical Resistance, Marking Paints and Inks.
2.3.25, Detection and Measurement of Ionizable Surface Contaminants by Resistivity of Solvent Extract.
2.4.1, Adhesion, Tape Testing.
2.4.1.1, Adhesion, Marking Paints and Inks.
2.4.3, Flexural Fatigue, Flexible Printed Wiring Materials.
2.4.3.1, Flexural Fatigue and Ductility, Flexible Printed Wiring.
2.4.8, Peel Strength of Metallic Clad Laminates.
2.4.15, Surface Finish, Metal Foil.
2.4.21, Land Bond Strength, Unsupported Component Hole.
2.4.22, Bow and Twist (Percentage).
2.4.28.1, Adhesion, Solder Resist (Mask), Tape Test Method.
2.4.36, Rework Simulation, Plated-Through Holes for Leaded Components.
2.5.7, Dielectric Withstanding Voltage, PWB.
2.6.3, Moisture and Insulation Resistance, Printed Boards.
2.6.7.2, Thermal Shock, Continuity and Microsection, Printed Board.
2.6.8, Thermal Stress, Plated Through-Holes.

A.7. DEFINITIONS

A.7.1 Base material types. Qualification of a particular flexible base material types will be extended to cover all flexible base material types of that same family.

a. Adhesiveless family includes all base materials that use other techniques to hold the basis metal to one or both sides of the dielectric.

b. Adhesive family include all base materials that rely/use an adhesive to hold the metal to both sides of the dielectric. Note "cast" materials are considered adhesiveless.



Source: https://assist.dla.mil -- Downloaded: 2016-11-03T17:14Z
Check the source to verify that this is the current version before use.

A.7.2 Complex (as related to group B testing). Complexity of printed wiring boards will usually depend on the base materials used; dielectric layer thickness; overall printed wiring board thickness; number of conductor layers; conductor widths and spacings; intricacy of patterns; size, quantity, aspect ratio and positioning of plated holes; tolerancing of any or all of the above; the presence of internal thermal planes or heat sinks, and all combinations of the above with respect to their manufacturing difficulty, and their effects upon the consistent ability of the printed wiring boards to meet the requirements of the periodic testing, unless otherwise specified by the contracting activity.

A.7.3 Conductive interfaces. The term conductive interfaces is used to describe the junction between the hole wall plating or coating and the surfaces of internal and external layers of metal foil. The interface between platings and coating (electroless copper, direct metallization copper and non-electroless electroless copper substitutes, and electrolytic copper, whether panel or pattern plated), are also considered a conductive interface.

A.7.3.1 External conductive interfaces. An external conductive interface is considered to be the junction between the surface copper foil and the deposited or plated copper.

A.7.3.2 Internal conductive interfaces. An internal conductive interface is considered to be the junction between the internal layers (copper foil posts or internal layers) and the deposited or plated copper.

A.7.4 Contract services. Contract services are those services contracted or performed (or both) outside the qualified manufacturer's immediate facility, not to include verification testing including electrical function tests.

A.7.4.1 Mass lamination. Manufacturers requesting to use contract services lamination (mass lamination) are required to be qualified to type 4 of the same base material type requested. The qualification test specimens and sample sizes are specified in A.4.5.2.1. Printed wiring board manufacturers using contract services are subject to the conditions of A.4.5.4.3.

A.7.5 Cover material. Cover materials are thin dielectric materials used to encapsulate circuitry.

A.7.5.1 Covercoat. Covercoats are materials that are deposited as a liquid onto the circuitry that subsequently becomes a permanent dielectric coating.

A.7.5.2 Coverfilm. Coverfilms consist of one of the following:

a) A homogeneous single component.

b) Separate layers of generically similar chemistries.

c) A composite blend of constituents.

A.7.5.3 Coverlay. Coverlay are film and adhesive made from separate layers of generically different chemistries.

A.7.6 Inspection panel. A production panel which includes a sufficient quantity of quality-conformance test circuitry necessary to complete all qualification inspections or group A and group B verifications, as applicable. Inspection panels may have been wholly or partially processed as a larger production panel. Separation of a production panel into multiple inspection panels is acceptable if each of the smaller sub-panels contain a sufficient quantity of quality-conformance test circuitry necessary to complete all qualification inspections or group A and group B verifications, as applicable. In order for printed wiring boards to be potential compliant printed wiring boards, they would have been fabricated on inspection panels.

A.7.7 Printed wiring board test specimen. The term ‘printed wiring board test specimen’ is used to describe all of the following; production printed wiring boards, portions of production printed wiring boards, qualification test specimens, or test coupons.



Source: https://assist.dla.mil -- Downloaded: 2016-11-03T17:14Z
Check the source to verify that this is the current version before use.

A.7.8 Procedure. A particular way of accomplishing an objective; generally refers to the method rather than the result. Procedures are usually developed to describe the methods for implementing policy.

A.7.9 Resin systems families.

A.7.9.1 Thermosetting resin. For the purposes of this document, the following base material types are classified as containing thermosetting resins: AF, BF, BI, GB, GC, GF, GH, GI, GM, QI, and SC.

A.7.9.2 Thermoplastic resin. For the purposes of this document, the following base material types are classified as containing thermoplastic resin: GR, GP, GT, GX, and GY.

A.7.10 Printed wiring board thickness. The overall printed wiring board thickness includes metallic depositions, fusing, and solder mask. The overall thickness is measured across the printed wiring board extremities (thickest part), unless a critical area, such an edge card connector or card guide mounting location, is identified on the master drawing.

A.7.11 Quality conformance test circuitry (QCTC). See IPC–T–50.

A.7.12 As-received condition (microsection). As received means after tin-lead is reflowed or fused or after solder coating but prior to solder float thermal stress, rework simulation, thermal shock or bond strength testing.

A.7.13 Fold cycle. A fold cycle can be defined as either of the following:

a. A fold cycle is defined as taking one end of the specimen and folding it around a mandrel and then unfold back to the original starting position, traveling 180 degrees in one direction and 180 degrees in the opposite direction.

b. A fold cycle may also be defined as folding (using opposite ends) the ends toward each other (fold the same direction) and then unfold back to the original starting position, with each end traveling 90 degrees in one direction and 90 degrees in the opposite direction.

A.7.14 Soda strawing (solder mask). A long tubular-like void along the edges of conductive patterns where the solder mask is not bonded to the base material surface or the edge of the conductor. Tin-lead fusing fluxes, fusing oils, solder fluxes, cleaning agents or volatile materials may be trapped in the soda straw void.

A.7.15 Traceability code. The manufacturer defined traceability code is used to ensure traceability between the printed wiring boards and the quality conformance test circuitry that represent them for manufacturing history.

A.7.16 Qualified Products Database Supplemental Information Sheet (QPDSIS). The DSCC-VQ QPDSIS is an electronic file that is available from the DSCC-VQ web site to provide users and customers with additional qualification details and serve as a support document to the official online QPD. The QPDSIS can be viewed or downloaded at URL: http://www.dscc.dla.mil/downloads/qplqml/50884/QPDSIS_50884.pdf.



Source: https://assist.dla.mil -- Downloaded: 2016-11-03T17:14Z
Check the source to verify that this is the current version before use.

# OPTIONAL PRODUCT ASSURANCE (QUALIFICATION AND VERIFICATION) REQUIREMENTS FOR QUALIFIED MANUFACTURER LIST PROGRAMS

## B.1. SCOPE

B.1.1 Scope. This appendix contains optional requirements concerning the QPL/QML product assurance level for printed wiring boards covered by this specification. The process for extending qualification is also outlined herein. This appendix is not a mandatory part of this specification. It can be used only by manufacturers certified or qualified for listing on QML-31032. The information contained herein is intended for guidance only.

## B.2. APPLICABLE DOCUMENTS

B.2.1 General. The documents listed in this section are specified in sections B.3 and B.4 of this specification. This section does not include documents cited in other sections of this specification or recommended for additional information or as examples. While every effort has been made to ensure the completeness of this list, document users are cautioned that they must meet all specified requirements documents cited in sections B.3 and B.4 of this specification, whether or not they are listed.

B.2.2 Government documents.

B.2.2.1 Specifications, standards, and handbooks. The following specifications, standards, and handbooks form a part of this document to the extent specified herein. Unless otherwise specified, the issues of these documents are those cited in the solicitation or contract.

DEPARTMENT OF DEFENSE SPECIFICATIONS

MIL-PRF-31032 – Printed Circuit Board/Printed Wiring Board, General Specification for.

(Copies of these documents are available online at http://assist.daps.dla.mil/quicksearch/ or http://assist.daps.dla.mil/ or from the Standardization Document Order Desk, 700 Robbins Avenue, Building 4D, Philadelphia, PA 19111–5094.)

B.2.3 Order of precedence. Unless otherwise noted herein or in the contract, in the event of a conflict between the text of this document and the references cited herein, the text of this document takes precedence. Nothing in this document, however, supersedes applicable laws and regulations unless a specific exemption has been obtained.

## B.3. REQUIREMENTS

B.3.1 Performance requirements. The performance requirements of the applicable MIL-PRF-31032 specification sheet shall apply to all printed wiring boards procured to the QPL/QML product assurance level.

B.3.2 Accept/reject criteria. The accept/reject criteria of the applicable MIL-PRF-31032 specification sheet shall apply to all printed wiring boards procured to the QPL/QML product assurance level.

B.3.3 QML brand. At the option of the manufacturer, the QML brand specified in MIL-PRF-31032 may be placed on printed wiring boards that comply with the product assurance requirements of this appendix.



Source: https://assist.dla.mil -- Downloaded: 2016-11-03T17:14Z
Check the source to verify that this is the current version before use.

B.4. VERIFICATION

B.4.1 Qualification inspection (reciprocal qualification from MIL-PRF-31032). A reciprocal qualification listing (i.e., from a technology qualified to a MIL-PRF-31032 specification sheet) to this document will depend on the level of QML technology qualified. Unless otherwise detailed in MIL-PRF-31032 qualification test plan, following guidelines will apply:

a. Printed wiring board type (see 6.4.3, A.4.5.4.1, and D.3.5). The extent of qualification for base materials types defined in A.4.5.5 will apply. EXAMPLE: A type 2 qualification under a MIL-PRF-31032 specification sheet will not justify a type 4 qualification listing to this document.

b. Printed board material (see A.4.5.5.4). The extent of qualification for base materials types defined in A.4.5.4 will apply. EXAMPLE: An adhesiveless flexible metal clad base material qualification under a MIL-PRF-31032 specification sheet will justify an adhesiveless flexible metal clad base material qualification listing to this document.

c. Complexity. The QPL/QML manufacturer can supply QPL compliant printed wiring boards greater than their qualified QML capability (similar to the traditional QPL product assurance level). Printed wiring board designs verified using the QPL/QML option shall flow through the conversion of customer requirements element of the approved Quality Management (QM) plan as described in MIL-PRF-31032, Appendix A. The Technical Review Board (TRB) shall evaluate designs exceeding their current QML–31032 qualification listing to determine if the add–on qualification provisions of MIL-PRF-31032 shall be used. Reasons for not using the add–on qualification provisions shall be documented in the periodic status reports.

B.4.1.1 Concurrent qualification. Manufacturers already qualified to the QPL level of this document will retain that listing after transitioning to the QPL/QML level. The 3 year expiration time will not apply to the QPL/QML product assurance level.

B.4.1.2 Retention (see B.6.4). The QML status report described in MIL-PRF-31032 will cover the QPL/QML retention requirements to this document.

B.4.2 QPL/QML product assurance. The product assurance requirements for the QPL/QML level of printed wiring board furnished under this specification shall be satisfied by certification to MIL-PRF-31032. All printed wiring boards manufactured and delivered in compliance with this appendix should be produced in accordance with the approved quality management plan.

B.4.3 Printed wiring board performance verification. Printed wiring board performance verification inspection shall consist of inspections on the production printed wiring boards and test coupons specified in the applicable MIL-PRF-31032 specification sheet. The following details are applicable to the QPL/QML product assurance level:

a. Lot conformance inspection (LCI) product acceptance testing should be based on the applicable verification flows (in-process and group A) offered by this document (see A.4.4 and appendix D) or the routine from a similar technology described by a MIL-PRF-31032 specification sheet. The various verification flows should be based upon the design standard used to design the printed wiring boards and the available panel test coupons for the printed wiring boards.

b. MIL-PRF-31032 periodic conformance inspection (PCI) program can be used in lieu of groups B and C inspection of this document.

c. Test optimization is applicable to this appendix and can be applied to any verification flow detailed in this document.



Source: https://assist.dla.mil -- Downloaded: 2016-11-03T17:14Z
Check the source to verify that this is the current version before use.

B.5. PACKAGING

B.5.1 Packaging. For acquisition purposes, the packaging requirements shall be as specified in the contract or order (see 6.2). When packaging of materiel is to be performed by DoD or in-house contractor personnel, these personnel need to contact the responsible packaging activity to ascertain packaging requirements. Packaging requirements are maintained by the Inventory Control Point's packaging activities within the Military Service or Defense Agency, or within the Military Service's system commands. Packaging data retrieval is available from the managing Military Department's or Defense Agency's automated packaging files, CD-ROM products, or by contacting the responsible packaging activity.

B.6. NOTES

B.6.1 Intended use. This appendix is intended to be used by manufacturers certified to MIL-PRF-31032 to reduce the complexity of maintaining multiple product/process and testing flows (both MIL-P-50884 or MIL-PRF-31032) within a the manufacturing and testing facility.

B.6.2 Application of the QPL/QML product assurance level to existing requirements.

B.6.2.1 Use of existing master drawings. The QPL/QML printed wiring board manufacturer can use pre-existing master drawing and production artwork without any modifications (existing production masters test coupons and requires no additional or new ones).

B.6.2.2 Form, fit, and function. The form, fit, and function of the printed wiring boards, whether the QPL/QML product assurance level or the QPL product assurance level is used, will be the same.

B.6.2.3 Certification of conformance. The printed wiring boards can be certified as being compliant to this document (MIL-P-50884).

B.6.3 Benefits of the QPL/QML product assurance level. Printed wiring boards produced by QML manufacturers using the provisions of this appendix in lieu of previous revisions would be compliant to this document (MIL-P-50884) when using the QPL/QML product assurance level with the added benefits as follows:

a. The QPL/QML manufacturer can use pre-existing master drawing and production artwork without any modifications needed (can use existing production masters test coupons and requires no additional or new ones).

b. The printed wiring boards, whether the QPL/QML option or the QPL option is used, will be the same.

c. The level of quality will be the same or higher than the QPL product assurance level.

d. When using the correct verification test (for the design), the cost should be the same or less due to enhancements made to accept/reject criteria.

e. Customers will be more confident that a QPL/QML manufacturer has demonstrated the capabilities to build its design dues to its QML certification and qualification rather the generic standardized qualification test vehicle of the QPL quality assurance level portion of this document.



Source: https://assist.dla.mil -- Downloaded: 2016-11-03T17:14Z
Check the source to verify that this is the current version before use.

B.6.4 Retention of qualification. The manufacturer need only to keep the qualifying activity apprised of its total QML program, i.e., MIL-PRF-31032 QML and this document's QPL/QML product assurance level. This means that the manufacturer does not have to maintain two separate compliance programs, (i.e., no need for a QPL compliance program for this document and a QML program for MIL-PRF-31032).

B.6.5 Certification of conformance and acquisition traceability. The manufacturer can certify QPL/QML printed wiring boards process under their MIL-PRF-31032 QML program as compliant to this document. The certificate of compliance should reference the QPL/QML product assurance level to differentiate the compliant product from printed wiring boards verified using the QPL product assurance level offered in this document.

B.6.6 Past specification revisions (see appendix D for more details). Printed wiring boards procured to this document meets and exceeds all quality and reliability requirements of previous revisions of MIL-P-50884.



Source: https://assist.dla.mil -- Downloaded: 2016-11-03T17:14Z
Check the source to verify that this is the current version before use.

# C = 0 (ZERO DEFECT) SAMPLING, TEST EQUIPMENT, AND SUITABILITY OF INSPECTION FACILITIES

## C.1. SCOPE

C.1.1 Scope. This appendix details the statistical sampling procedures to be used with the QPL product assurance level of this specification. This appendix is a mandatory part of this specification. The information contained herein is intended for compliance.

## C.2. APPLICABLE DOCUMENTS

C.2.1 General. The documents listed in this section are specified in sections C.3, C.4, and C.5 of this specification. This section does not include documents cited in other sections of this specification or recommended for additional information or as examples. While every effort has been made to ensure the completeness of this list, document users are cautioned that they must meet all specified requirement documents cited in sections C.3, C.4, and C.5 of this specification, whether or not they are listed.

C.2.2 Non–Government publications. The following documents form a part of this document to the extent specified herein. Unless otherwise specified, the issues of these documents are those cited in the solicitation or contract.

ASTM INTERNATIONAL (ASTM)

ASTM E29 – Standard Practice for Using Significant Digits in Test Data to Determine Conformance with Specifications.

(Application for copies should be addressed to the ASTM International, 100 Barr Harbor Drive, P. O. Box C700, West Conshohocken, PA 19428-2959 or http://www.astm.org.)

NATIONAL CONFERENCE OF STANDARDS LABORATORIES

NCSL Z540.1 – Calibration Laboratories and Measuring and Test Equipment – General Requirements.

(Application for copies should be addressed to NCSL International, 2995 Wilderness Place, Suite 107, Boulder, CO 80301-5404 or at URL http://www.ncsli.org.)

C.2.3 Order of precedence. Unless otherwise noted herein or in the contract, in the event of a conflict between the text of this document and the references cited herein, the text of this document takes precedence. Nothing in this document, however, supersedes applicable laws and regulations unless a specific exemption has been obtained.

## C.3. DEFINITIONS AND SYMBOLS

C.3.1 Definitions. The following definitions shall apply for all statistical sampling procedures:

a. C = 0 sample plan: The C = 0 sample plans are defined as a combination of a test specimen usage identifier (see C.3.1.b) and a sample size series (see C.3.1.c). The resulting C = 0 sample plan will be a two character designator combination that identifies the sample size series that is to be with a type of test specimen for a particular verification (see C.4.5).



Source: https://assist.dla.mil -- Downloaded: 2016-11-03T17:14Z
Check the source to verify that this is the current version before use.

b. Test specimen usage identifier (see C.4.5 for examples): The following usage modifiers are used to differentiate when a particular plan is to be used for a particular test specimen:

(1) The letter "B" will be used to signify that production printed wiring boards are to be sampled.

(2) The letter "T" will be used to signify that test coupons are to be sampled based on the number of panels in the lot.

(3) An asterisk "*" will be used for either printed wiring boards or test coupons.

c. Sample size series: The sample size series is defined as the following series of letters: A, D, F, H, J, L, and N that are listed in table C–I (see C.4.5 for examples).

d. Tightened inspection: Tightened inspection is defined as inspection performed using the next sample size value in the sample size series lower than that specified.

e. Acceptance number (C): The acceptance number is defined as an integral number associated with the selected sample size which determines the maximum number of defectives permitted for that sample size.

f. Rejection number (R): Rejection number is defined as one plus the acceptance number.

C.3.2 Symbols. The following symbols shall apply for all statistical sampling procedures:

a. C: Acceptance number.

b. R: Rejection number.

C.4. STATISTICAL SAMPLING PROCEDURES AND SAMPLE PLAN TABLE

C.4.1 General. Statistical sampling shall be conducted using the C = 0 method. The C = 0 method as specified herein is a sampling plan that provides a high degree of assurance that a lot having a proportion defective greater than the specified acceptance number (C = 0) will not be accepted. For all situations, the acceptance number (C) shall be equal to 0 (C = 0) and the rejection number (R) shall be 1 or greater ($R \geq 1$).

C.4.2 Acceptance and procedure.

C.4.2.1 Acceptance number (C = 0). Acceptance of inspection lots shall be based on an acceptance number of zero (C = 0).

C.4.2.2 Rejection number ($R \geq 1$). Failure of a sample unit for one or more tests of a subgroup shall be charged as a single failure. One or more sample rejects shall be cause for failure of the lot or sublot, as applicable. Any failure on any of the sample units shall constitute a failure of the entire inspection lot or sublot.

C.4.3 Tightened inspection (for reevaluation purposes). Tightened inspection shall be performed by sampling using double the sample size as specified in table C–I with zero failures allowed or 100 percent.

C.4.4 Sample size. The sample size for each subgroup shall be determined from table C–I. If lot size is smaller than sample size, test all of the units. The manufacturer may, at their option, select a sample size greater than that required; however, the number of failures permitted shall not exceed the acceptance number.



Source: https://assist.dla.mil -- Downloaded: 2016-11-03T17:14Z
Check the source to verify that this is the current version before use.

C.4.5 C = 0 sample plan construction (selection and usage of the sample size series). The sample size series of table C–I to be used will be directed from the appropriate inspection table. The inspection table will specify the C = 0 sample plan (test specimen identifier and sample size series) or plans (test printed wiring board, test coupons, or either one) to use.

EXAMPLES: If an inspection table specified that "Plan BF or TL" be used when verifying test specimens, it is specifying that sample size series "F" of table C–I shall be used for selecting printed wiring boards and sample size series "L" shall be used for selecting test coupons. If the same inspection table specified that "Plan *H" be used (the asterisk "*" representing both printed wiring boards and test coupons), then sample size series "H" of table C–I shall be used for either printed wiring boards or test coupons.

TABLE C–I. C = 0 (zero defect) sampling.

| Lot size | Sample size (number of test specimens to be inspected) 1/ | | | | | | |
|---|---|---|---|---|---|---|---|
| | Series A | Series D | Series F | Series H | Series J | Series L | Series N |
| 1 to 8 | All | All | All | 5 | 3 | 2 | 1 |
| 9 to 15 | All | All | 13 | 5 | 3 | 2 | 1 |
| 16 to 25 | All | All | 13 | 5 | 3 | 2 | 1 |
| 26 to 50 | All | 32 | 13 | 5 | 5 | 3 | 2 |
| 51 to 90 | 50 | 32 | 13 | 7 | 6 | 4 | 2 |
| 91 to 150 | 50 | 32 | 13 | 11 | 7 | 5 | 2 |
| 151 to 280 | 50 | 32 | 20 | 13 | 10 | 6 | 4 |
| 281 to 500 | 50 | 48 | 29 | 16 | 11 | 7 | 4 |
| 501 to 1,200 | 75 | 73 | 34 | 19 | 15 | 8 | 4 |
| 1,201 to 3,200 | 116 | 73 | 42 | 23 | 18 | 9 | 4 |

1/ If lot size is smaller than sample size test all of the units.

C.5. TEST EQUIPMENT, CALIBRATION, MEASUREMENTS, AND INSPECTION FACILITIES

C.5.1 Test equipment and calibration. All tests and measurements for process control, qualification testing, inspection of product for delivery (in-process and group A), or periodic conformance inspection (groups B or C) shall be made with capable instruments whose accuracy has been verified. Calibration of measurement, test equipment, and test standards that control the accuracy of inspection and test equipment and facilities shall be in accordance with NCSL Z540.1 or equivalent. Calibrated test equipment and test standards shall be controlled, used, and stored in a manner suitable to protect calibration integrity. Test equipment requiring calibration shall be identified and labeled in accordance with NCSL Z540.1 or an equivalent system, approved by the qualifying activity.

C.5.1.1 Resolution of measurement devices and test equipment capability. Unless otherwise specified (see A.3.1.1), the resolution of measurement devices and test equipment used for the evaluation of printed wiring board performance shall be at least a factor of 10 better than the limits or tolerances of a value to be determined. For example: A voltmeter would need a resolution of ±0.1 percent to determine a tolerance of ±1 percent. NOTE: State of the art requirements in which a 10:1 ratio cannot be effectively achieved due to a lack of national standards shall be justified and documented.



Source: https://assist.dla.mil -- Downloaded: 2016-11-03T17:14Z
Check the source to verify that this is the current version before use.

C.5.1.2 Electrical test frequency. When specified (see A.3.1.1), the frequency of the electrical test shall be the specified operating frequency of the printed wiring board. Where a frequency range is specified, major functional parameters shall be tested at the maximum and minimum frequencies of the range in addition to those tests conducted at any specified frequency within the range. Whenever electrical tests are conducted on printed wiring boards for which a range of frequencies, or more than a single operating frequency is specified, the frequency at which tests are conducted shall be recorded along with the parameters measured at those frequencies.

C.5.2 Test methods.

C.5.2.1 Acquiring activity or manufacturer imposed tests. Acquiring activity or manufacturer imposed tests shall be in accordance with the requirements specified in the master drawing. If any additional imposed tests detect a problem, the manufacturer shall submit all panels/printed wiring boards in the lot to those tests to eliminate rejects and shall take steps to determine and eliminate the cause of failure.

C.5.2.2 Test method alternatives or variations. Alternate test methods or variation from the specified test method are allowed provided that it is demonstrated to the qualifying activity or their agent that such alternatives or variations in no way relax the requirements of this specification or the referenced test method. Alternate test methods, or variation from the specified test method, shall be approved by the qualifying activity or their agent before testing is performed. For proposed test variations, a test method comparative error analysis shall be made available for checking by the qualifying activity or their agent (see appendix B).

C.5.2.3 Procedure in case of test equipment malfunction or operator error. When it has been established that a improper test is due to test equipment malfunction or operator error, the inspection facility shall document the results of its investigations and corrective actions, if required, and shall make this information available to the qualifying activity and the acquiring activity, as applicable.

C.5.3 Numeric reporting. The results of printed wiring board verification shall be presented in accordance with the requirements outline herein.

C.5.3.1 Observed values (true and nominal). The specification limit requirements specified are for true values. Nominal values are indicated by the inclusion of a tolerance. Proper allowance shall be made for measurement errors (including those due to deviations from nominal test conditions) in establishing the working limits to be used for the values to be measured, so that the values of the test specimen parameters (as they would be under nominal test conditions) can be determined properly.

C.5.3.2 Significant digits. Unless otherwise specified (see A.3.1.1), the significant digits to be retained of an observed value shall be in accordance with the resolution requirements of C.5.1.1.

C.5.3.3 Rounding method. For purposes of determining conformance with the specification limit, an observed value, or a calculated value, shall be rounded "to the nearest unit" in the last right-hand significant digit to be retained in expressing the specification limit, in accordance with the rounding method of ASTM E29. The significant digits to be retained of an observed value or calculated value shall reflect the resolution requirements of C.5.1.1.

EXAMPLE 1: The minimum specified etchback requirement is .0002 inch. The resolution required of the measurement device in accordance with C.5.1.1 would to the ±.00001 inch. The significant digit to be retained would be one digit to the right of requirement, in this example, ".000RS" inch, where "R" is the requirement and "S" is the significant digit. In a situation where a test personnel uses an instrument capable of resolution to ±.000001 inch, a measurement of .000186 inch is determined for etchback on that test specimen. This value can be rounded to .00019 inch or reported as taken, .000186 inch. The observed value of .000186 inch cannot be rounded to .0002 inch.



Source: https://assist.dla.mil -- Downloaded: 2016-11-03T17:14Z
Check the source to verify that this is the current version before use.

EXAMPLE 2: The maximum specified printed wiring board thickness requirement is .090 inch. The resolution required of the measurement device in accordance with C.5.1.1 would to the ±.0001 inch. In this situation, the test personnel uses an instrument capable of resolution to ±.0001 inch, and records measurements of .0899, .0900, .0898, and .0897 inch for the printed wiring board thickness on that test specimen. The test determination of (.3594 / 4) .08985 inch is calculated. This test determination can be rounded to .0898 inch or reported as calculated. Rounding this value to .0899 inch would not be in accordance with rounding procedure of ASTM E29.

C.5.4 Control based on uncertainty. Test processes that have complex characteristics are best performed and controlled by the application of uncertainty analysis. The overall uncertainty in a test or measurement process shall be determined and the impact of said uncertainty on the product parameter tolerance shall be taken into account. The methods used for determining uncertainty shall be defined and documented. The method selected may use any or all combinations of the following forms:

a. Arithmetic addition (linear), normally produces an overly conservative estimate and reflects a highly improbable situation in which contributing errors are at their maximum limit at the same time and same direction.

b. Root sum square (RSS), normally applied where the errors tend to fit a normal distribution (Gaussian) and are from independent sources.

c. Partial derivatives, used where complex relationships exist.

d. Monte Carlo simulation, used in very complex situations where other methods are not easily applied or do not fit.

e. Standard reference material (or controlled correlation device) testing providing observable data. NOTE: Observable data from a controlled device may be relied upon to provide feedback that confirms process performance is within statistical limits.

f. Analysis of systematic and random errors, applying corrections as applicable.

g. Any other recognized method of combining errors into an expression of uncertainty substantiated by an engineering analysis.

C.6. SUITABILITY OF INSPECTION FACILITIES

C.6.1 Suitability of inspection facilities. The inspection facility used to perform qualification testing and periodic conformance inspection shall be approved by the qualifying activity for the performance of the tests and inspection requirements of compliant printed wiring boards. Additional details regarding the suitability status of an inspection facility are outlined in the DSCC publication "DSCC-VQ Laboratory Suitability Information" that can be downloaded or viewed at the following URL: http://www.dscc.dla.mil/downloads/VQGeneral/Lab_Suit_Book_0405.pdf.



Source: https://assist.dla.mil -- Downloaded: 2016-11-03T17:14Z
Check the source to verify that this is the current version before use.

C.6.2 Suitability status and test reports. Granting of laboratory suitability to an inspection facility does not mean that the Government will automatically accept or approve a test report prepared by the laboratory. Some of the most common reasons for rejection of qualification and periodic conformance test reports are the following:

a. Testing prior to receipt of an authorization to test.

b. Failure to record actual test conditions or results.

c. Failure to perform the proper test.

d. Failure to perform the test on the proper qualification test specimen.

e. Failure to test the minimum number of samples specified.

f. Incorrect test procedures.

g. Use of improperly calibrated test equipment.

h. Use of test equipment not previously found acceptable by DSCC.

C.7. DEFINITIONS FOR TEST EQUIPMENT AND INSPECTION FACILITIES

C.7.1 Accuracy. A measure of the closeness of an individual measurement or the average of a number of measurements to the true value. Accuracy includes a combination of random error (precision) and systematic error (bias) components that are due to sampling and analytical operations.

C.7.2 Bias. The systematic or persistent distortion of a measurement process, which causes errors in one direction (i.e., the expected sample measurement is different from the sample's true value).

C.7.3 Calibration. Calibration is an activity related to measurement and test equipment. Calibration is the comparison of measurement standard, instrument, or item of known precision and bias with another standard, instrument, or item to detect, correlate, report, or eliminate by adjustment, any variation in the precision and bias of the item being compared. Use of calibrated measurement standard, instrument, or items provide the basis for value traceability of product technical specifications to national standard values.

C.7.4 Limit or specification limit. A specification limit are numerical requirements specified in appendix A, in the applicable master drawing, or in referenced documents, for the minimum or maximum value used for acceptance purposes.

C.7.5 Measurement and testing equipment. Tools, gauges, instruments, sampling devices, or systems used to calibrate, measure, test, or inspect in order to control or acquire data to verify conformance to specified requirements.

C.7.6 Precision. The degree to which a measurement standard, instrument, item, test, or process exhibits repeatability. Expressed statistically or through various techniques of Statistical Process Control (SPC), the term is many times used interchangeably with "repeatability". Precision is a measurement of how closely the analytical results can be duplicated.



Source: https://assist.dla.mil -- Downloaded: 2016-11-03T17:14Z
Check the source to verify that this is the current version before use.

C.7.7 Resolution. The smallest unit of readability or indication of known value on an instrument, device, or assemblage thereof. It is also related to the gradations on measuring instruments and the ability of the inspection/test personnel to interpret between those gradations. The resolution value is frequently used in the device literature to classify the instrument.

C.7.8 Standard reference material (SRM). A device or artifact recognized and listed by the National Institute of Standards and Technology (NIST) as having known stability and characterization. SRMs used in product testing provide traceability for technical specifications. SRMs do not require calibration when used and stored in accordance with NIST accompanying instructions. They are used as "certified materials".

C.7.9 Tolerance (IPC–T–50). The total amount by which a specific dimension is permitted to vary. A tolerance is indicated in this specification only if it is expressed as the variation about a specified value (also known as a "nominal value").

C.7.10 Uncertainty. An expression of the combined errors in a test measurement process. Stated as a range within which the subject quantity is expected to lie. Comprised of many components including estimates of statistical distribution and results of measurement or engineering analysis. Uncertainty established with a suitable degree of confidence, may be used in assuring or determining product conformance and technical specifications.

C.8 Supporting documents. The documents in this section may be used as guidelines for understanding measurement and test assurance principals.

INTERNATIONAL ORGANIZATION FOR STANDARDIZATION (ISO)

| | | |
|---|---|---|
| ISO 10012 | – | Measurement Management Systems – Requirements for Measurement Processes and Measuring Equipment – First Edition |
| ISO14253–1 | – | Geometrical Product Specifications (GPS) - Inspection by Measurement of Workpieces and Measuring Equipment - Part 1: Decision Rules for Proving Conformance or Non-Conformance with Specifications. |
| ISO17025 | – | General Requirements for the Competence of Testing and Calibration Laboratories. |

(Application for copies should be addressed to the International Organization for Standardization, Case Postale 56, Geneva, Switzerland CH–1211 or at URL http://www.iso.org.)

NCSL INTERNATIONAL (NCSL)

| | | |
|---|---|---|
| NCSL Z540.2 | – | U. S. Guide to the Expression of Uncertainty in Measurement. |
| NCSL Z540.3 | – | Requirements for the Calibration of Measuring and Test Equipment. |

(Application for copies should be addressed to the NCSL International, 2995 Wilderness Place, Suite 107, Boulder, CO 80301–5404 or at URL http://www.ncsli.org.)

(Non-Government standards and other publications are normally available from the organizations that prepare or distribute the documents. These documents also may be available in or through libraries or other informational services.)



Source: https://assist.dla.mil -- Downloaded: 2016-11-03T17:14Z
Check the source to verify that this is the current version before use.

This page intentionally left blank.



Source: https://assist.dla.mil -- Downloaded: 2016-11-03T17:14Z
Check the source to verify that this is the current version before use.

# SUPERSESSION AND USAGE OF LEGACY DESIGN STANDARDS

## D.1. SCOPE

D.1.1 Scope. This appendix contains guidance concerning the supersession of legacy Department of Defense documents such as MIL-P-50884 revision C and MIL-STD-2118. This appendix is not a mandatory part of this specification. The information contained herein is intended for guidance only.

## D.2. APPLICABLE DOCUMENTS

D.2.1 General. The documents listed in this section are specified in sections D.3 and D.4 of this specification. This section does not include documents cited in other sections of this specification or recommended for additional information or as examples. While every effort has been made to ensure the completeness of this list, document users are cautioned that they must meet all specified requirement documents cited in sections D.3 and D.4 of this specification, whether or not they are listed.

D.2.2 Non–Government publications. The following documents form a part of this document to the extent specified herein. Unless otherwise specified, the issues of these documents are those cited in the solicitation or contract.

IPC – ASSOCIATION CONNECTING ELECTRONICS INDUSTRIES (IPC)

| | | |
|---|---|---|
| IPC-T-50 | – | Terms and Definitions for Interconnecting and Packaging Electronic Circuits. |
| IPC-D-249 | – | Design Standard for Flexible Single and Double-Sided Printed Boards. |
| IPC-D-275 | – | Design Standard for Rigid Printed Boards and Rigid Printed Board Assemblies. |
| IPC-2221 | – | Generic Standard on Printed Board Design. |
| IPC-2223 | – | Sectional Design Standard for Flexible Printed Boards. |
| J-STD-003 | – | Solderability Tests for Printed Boards. |

(Application for copies should be addressed to the IPC - Association Connecting Electronics Industry, 3000 Lakeside Drive, Suite 309 S, Bannockburn, IL 60015-1249 or http://www.ipc.org.)

(Non-Government standards and other publications are normally available from the organizations that prepare or distribute the documents. These documents also may be available in or through libraries or other informational services.)

D.2.3 Order of precedence. Unless otherwise noted herein or in the contract, in the event of a conflict between the text of this document and the references cited herein, the text of this document takes precedence. Nothing in this document, however, supersedes applicable laws and regulations unless a specific exemption has been obtained.

## D.3. DEFINITIONS

D.3.1 Design standard. A document that establishes the standard practices, guidelines, and default values for the design of printed wiring boards. Within this document, the term "design standard" is used to describe those documents that contain the design, construction, material, and test coupon requirements and guidelines.

D.3.2 Legacy designs or documents. See D.4.1.



Source: https://assist.dla.mil -- Downloaded: 2016-11-03T17:14Z
Check the source to verify that this is the current version before use.

D.3.3 Supersession. The act of replacing a legacy document that no longer exists or is no longer supported with a currently supported document.

D.3.4 Quality conformance test circuitry. See IPC–T–50.

D.3.5 Printed wiring board type. The printed board types are defined in IPC-2223.

D.4. SUPERSESSION

D.4.1 Superseded specifications. Appendix A of this document includes the essential requirements of the previous revision and can be used to supersede the following specifications:

a. MIL-P-50884C, dated 4 May 1984 with amendment 1, dated 19 August 1988.

b. MIL-P-50884C, dated 4 May 1984 with amendment 2, dated 22 June 1990.

c. MIL-P-50884C, dated 4 May 1984 with amendment 3, dated 13 December 1991.

d. MIL-P-50884C, dated 4 May 1984 with amendment 4, dated 9 April 1993.

e. MIL-P-50884C, dated 4 May 1984 with amendment 5, dated 27 November 1998.

f. MIL-P-50884D, dated 28 December 2000.

g. MIL-P-50884D, dated 28 December 2000 with amendment 1, dated 13 September 2002.

h. MIL-P-50884D, dated 28 December 2000 with amendment 2, dated 29 May 2006.

D.4.1.1 Reference to superseded specifications. All the requirements of this document (MIL-P-50884E) can be interchangeable with those of MIL-P-50884. Therefore, existing procurement documents (master drawings or OEM documents) referencing MIL-P-50884 need not be revised, updated, or changed to make reference to MIL-P-50884E in order for this document to be used.

D.4.1.2 Revisions. Printed wiring boards tested to this document generally would meet or exceed the performance requirements of past revisions. However, due to various changes in acceptability and evaluation criteria, testing procedures and test coupon sampling, an exact duplication of a previous revision cannot be claimed or made in all areas of concern. Manufacturers should not pick-and-choose or mix acceptability requirements and test procedures from one revision of MIL-P-50884 to another. Compliance should be either to MIL-P-50884B, MIL-P-50884C (with a specific amendment, if applicable), or this document entirely, unless the manufacturer documents a direct correlation between the revisions (with any amendments, if applicable) under consideration.

D.4.2 Superseded guidelines and standards. The following design standards have been superseded by IPC-2221 and IPC-2223 for all types and classes of printed wiring boards:

a. MIL-STD-2118, dated 4 May 1984.

b. MIL-P-50884B (appendix), dated 19 January 1976.

c. MIL-P-50884A, dated 5 June 1972.

D.4.2.1 Retooling. Printed wiring boards that were designed using superseded Department of Defense design standards do not require conversion to IPC-2221 and IPC-2223.



Source: https://assist.dla.mil -- Downloaded: 2016-11-03T17:14Z
Check the source to verify that this is the current version before use.

D.4.2.2 Superseded types. Before MIL-P-50884C, only single and double sided printed wiring boards were covered in MIL-P-50884. The obsolete type A requirements in MIL-P-50884B (flexible printed wiring that is capable of withstanding at least one solder operation without terminal degradation) did not carry over to MIL-P-50884C. However, the type B requirements in MIL-P-50884B (flexible printed wiring that is capable of withstanding at least five solder and unsolder operations without terminal area degradation, i.e., rework simulation) was carried over to and extended to all printed wiring board designs in MIL-P-50884C.

D.4.3 Testing.

D.4.3.1 Group A inspection. Group A inspection should be performed to the specific revision, and amendment if applicable, called out by the acquisition documents. For example, if printed wiring boards are produced to MIL-P-50884C with amendment 1, MIL-P-50884C with amendment 3 and MIL-P-50884D, a manufacturer would be expected to perform group A testing, for the applicable lot, to the requirements of the revision specified. In those three different revisions (C w/amendment 1, C w/amendment 3, and D) a requirement for an acceptability criteria or test procedure may be the same or it might be significantly different. Retention of qualification summaries for group A should list the lots produced, grouped by revision and amendment.

D.4.3.2 Group B samples and testing. Samples to be selected for group B testing should be based on the most complex compliant printed wiring boards produced that month. For example, if printed wiring boards are produced to MIL-P-50884C, MIL-P-50884C with amendment 4 and MIL-P-50884D during a given month, and the most complex printed wiring boards produced that month were in the lot ordered to MIL-P-50884C with amendment 4, then that should be the lot from which the group B sample should be selected. The samples should be tested in accordance with MIL-P-50884C with amendment 4. If during that same month, printed wiring boards were produced to MIL-P-50884B and MIL-P-50884C (unamended), group B tests to those specific revisions would also be required in order to be compliant to those revisions, unless specifically specified in the contract.

D.4.3.3 Group C samples and testing. Group C testing is for manufacturers of installation use A and use B printed wiring boards to verify that it is still capable of meeting the flexibility class performance requirements. Samples to be selected for group C testing, unlike group B inspection, are not based on the most complex compliant printed wiring boards produced that month or reporting period. The group C samples can be either production printed wiring boards or the appropriate test coupon.

D.4.4 Superseded test coupons. Before MIL-P-50884C, test coupons were only used for first article inspection and not required for production. The production panel test coupons were introduced within MIL-P-50884C and MIL-STD-2118 were for the supplier certification program concept. The production test coupons of MIL-P-50884C, described within MIL-STD-2118, should be used when already incorporated onto production tooling. New designs or jobs should use the test coupons specified in IPC-2221. Table D–I contains a cross listing of the various test coupon designations that have been used in superseded design standards.

D.4.5 Test coupons, placement, quantity and usage. IPC-2221 contains a table that specifies for each production panel the test coupon placement, quantity (see note below) and usage (similar to IPC-D-275 and IPC-2221). However, MIL-STD-2118 did not provide a table that specifies for each production panel the test coupon placement, quantity, and usage.

NOTE: A sufficient number of test coupons should be incorporated onto the production panel in order to be able to perform group A and when necessary, group B inspection regardless of the number of test coupons specified by the design standard.

D.4.5.1 Intended use and intent of this appendix. This appendix can be used to understand the test coupons that were referenced in previous revisions of this document. These guidelines are intended for the re-identification and proper usage of test coupons within this document that are or were originally identified in various legacy Department of Defense printed wiring board design standards. This appendix is intended for use in conjunction with a manufacturer's verification conformance compliancy program.



Source: https://assist.dla.mil -- Downloaded: 2016-11-03T17:14Z
Check the source to verify that this is the current version before use.

D.4.5.2 Guidance concerning legacy test coupons. IPC-2221 contains a table that specifies for each production panel the test coupon placement, quantity, and usage (as did IPC-D-275 and MIL-STD-275). However, MIL-STD-2118 did not contain a table that specifies for each production panel the test coupon placement, quantity, and usage. In the past, when attempting to be compliant with the group A table of MIL-P-50884C, it was confusing and difficult to determine how many test coupons were needed on the production panel, how many test coupons needed to be microsectioned, and what evaluations could be combined during group A inspection.

TABLE D–I. Test coupon translation.

| Usage in this document | MIL-STD-2118 | IPC-D-249 | IPC-2221 1/ | IPC-100041 |
|---|---|---|---|---|
| Hole solderability<br>As received (microsection) | A | A | A | A |
| Solder float thermal stress (microsection)<br>Rework simulation | B | B | B | B |
| Plating adhesion | C | C | C | C |
| Interconnect resistance<br>(continuity) | D | D | D | D |
| Insulation resistance | E | | E | E |
| Flexibility | F | H | H | H |
| Solder mask | I or G 2/ | G | G/T | G |
| Peel strength | 3/ | | P | |
| Solderability | | | S | |
| Registration | | | F | |

1/ H coupon was added to IPC-2221 with the issuance of amendment 1.
2/ MIL-P-50884C, group A table reference test coupon "G" while MIL-STD-2118 displayed a test coupon "I" next to the solder mask test coupon figure.
3/ See appendix H.



Source: https://assist.dla.mil -- Downloaded: 2016-11-03T17:14Z
Check the source to verify that this is the current version before use.

# SEQUENTIAL ELECTROCHEMICAL REDUCTION ANALYSIS SOLDERABILITY TEST

## E.1. SCOPE

E.1.1 Scope. This test method describes the method and procedure used to evaluate oxidation levels on solderable surfaces. The type and quantity of oxides on copper, tin, and lead surfaces have a significant impact on solderability. The procedure involves using electrochemical reduction techniques to determine the type and quantity of oxide on plated-through holes, attachment lands, and printed wiring board surface conductors. The sequential electrochemical reduction analysis (SERA) solderability test method is offered as an alternative to other solderability test methods required by this document. This test method shall not be contractually imposed upon either the contractor or sub-contractor. This appendix is not a mandatory part of the specification. The information contained herein is intended for compliance only when volunteered as an alternative to the other solderability test methods detailed.

## E.2. APPLICABLE DOCUMENTS

E.2.1 General. The documents listed in this section are specified in sections E.3, E.4, and E.5 of this specification. This section does not include documents cited in other sections of this specification or recommended for additional information or as examples. While every effort has been made to ensure the completeness of this list, document users are cautioned that they must meet all specified requirement documents cited in sections E.3, E.4, and E.5 of this specification, whether or not they are listed.

E.2.2 Government documents.

E.2.2.1 Specifications, standards, and handbooks. The following specifications, standards, and handbooks form a part of this document to the extent specified herein. Unless otherwise specified, the issues of these documents are those cited in the solicitation or contract.

FEDERAL SPECIFICATIONS

A-A-59282 – Chemicals, Analytical; General Specification for.

(Copies of these documents are available online at http://assist.daps.dla.mil/quicksearch/ or http://assist.daps.dla.mil/ or from the Standardization Document Order Desk, 700 Robbins Avenue, Building 4D, Philadelphia, PA 19111–5094.)

E.2.3 Non–Government publications. The following documents form a part of this document to the extent specified herein. Unless otherwise specified, the issues of these documents are those cited in the solicitation or contract.

IPC – ASSOCIATION CONNECTING ELECTRONICS INDUSTRIES (IPC)

J-STD-004 – Requirements for Soldering Fluxes.

(Application for copies should be addressed to the IPC – Association Connecting Electronics Industry, 3000 Lakeside Drive, Suite 309 S, Bannockburn, IL 60015–1249 or http://www.ipc.org.)



Source: https://assist.dla.mil -- Downloaded: 2016-11-03T17:14Z
Check the source to verify that this is the current version before use.

THE INSTITUTE OF ELECTRICAL AND ELECTRONICS ENGINEERS, INC. (IEEE)

IEEE-488 – IEEE Standard Digital Interface For Programmable Instrumentation.

(Copies of these documents are available online at http://ieee.org or from the IEEE Operations Center, 445 Hoes Lane, Piscataway, New Jersey 08854–1331.)

(Non-Government standards and other publications are normally available from the organizations that prepare or distribute the documents. These documents also may be available in or through libraries or other informational services.)

E.2.4 Order of precedence. Unless otherwise noted herein or in the contract, in the event of a conflict between the text of this document and the references cited herein, the text of this document takes precedence. Nothing in this document, however, supersedes applicable laws and regulations unless a specific exemption has been obtained.

E.3. DEFINITIONS

E.3.1 Sequential Electrochemical Reduction Analysis (SERA). A chronopotentiometric reduction method for assessing tin-lead finish solderability.

E.4. TESTING

E.4.1 Apparatus (see figure E–1).

E.4.1.1 Reservoir (see detail A). The reservoir shall be a container constructed of a nonmetallic, nonreactive material with a minimum volume of 500 ml. The reservoir shall have an inlet/outlet port, test head chamber port, and a saturated calomel electrode (SCE) reference electrode port. The inlet/outlet port shall be connected to a vacuum trap tube. The inlet/outlet port shall incorporate a diffuser to aid in the effectiveness of the inert gas purging. Polypropylene tubing may be used for connection tubing. All connection fittings shall be of a nonreactive material. The reservoir shall have the capability of maintaining a positive pressure environment. The reservoir shall be emptied and rinsed with deionized water for every 16 hours of testing.

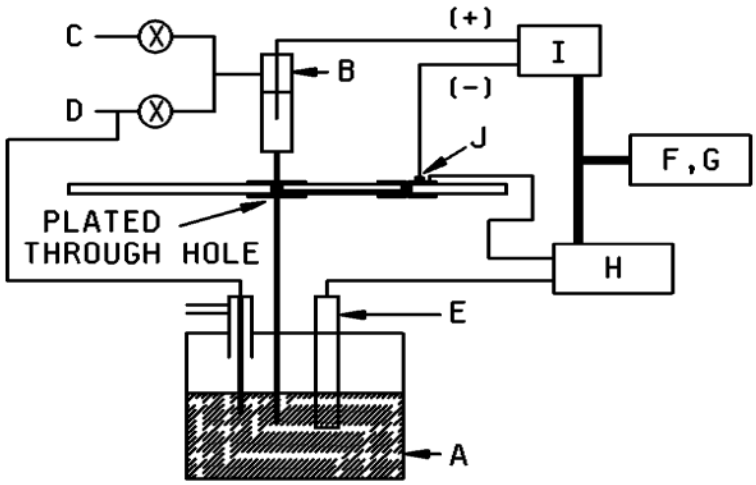


FIGURE E–1. Schematic of SERA plated through hole apparatus.



Source: https://assist.dla.mil -- Downloaded: 2016-11-03T17:14Z
Check the source to verify that this is the current version before use.

E.4.1.2 Test head (see detail B). The test head shall be constructed of a nonmetallic, nonreactive material. The test head shall have ports to allow inert gas purging and intake/expulsion of borate buffer solution. The test head shall have either an optical or mechanical means of aligning the test head chamber over the test plated-through hole. The test head shall use Vitron or equivalent o-rings for the test head to test surface interface seals. These o-rings shall be replaced after every 8 hours of testing unless integrity of the o-rings can be documented for extended periods. The test head shall have the capability of maintaining a positive pressure environment.

E.4.1.3 Vacuum pump (see detail C). A vacuum pump shall be used to draw buffer solution into and out of the test head compartment. The vacuum pump shall be able to draw minimum vacuum of 5 inches of Hg (16.9 kPa).

E.4.1.4 Gas regulator (see detail D). An in-line gas regulator shall be used to monitor the flow of the inert purging gas. The gas regulator shall be able to measure a minimum of 1 cubic foot per hour (0.02832 cubic meters per hour) at standard temperature and pressure.

E.4.1.5 SCE reference electrode (see detail E). The reference electrode shall be a SCE reference electrode with a temperature range of –5 degrees Celsius to +60 degrees Celsius and a Ph range of 0–14. The SCE reference electrode shall be stored in such a manner as to prevent drying out (either in a saturated KCI solution or in accordance with the manufacturer's instructions). The SCE reference electrode shall be calibrated in accordance with the manufacturer's instructions once every 30 days.

E.4.1.6 Computer (see detail F). The computer shall be equivalent to, or better than, a MS-DOS compatible, 80286–12MHz, with 512 Kbyte of internal memory and floppy and hard disk drives.

E.4.1.7 IEEE-488 interface card (see detail G). An IEEE–488 interface card is required for data acquisition between the computer, the digital multimeter, and the programmable current source.

E.4.1.8 Digital multimeter (see detail H). A digital multimeter is required to measure the voltage changes during the SERA reduction. The digital multimeter shall have the following characteristics:

a. A measurable voltage range of 0 V to –2.0 V.

b. A voltage measurement tolerance of ±5 mV.

c. Voltage measurement root-mean-square noise level should not exceed 10 mV.

d. Input impedance should be greater than 1 G-Ohm.

E.4.1.9 Programmable current source (see detail I). A programmable current source is required to apply a constant current during the SERA reduction. The programmable current source shall have the following minimum characteristics:

a. The applied current should be variable in 0.1 microamp steps between 1.0 microamps and 10 microamps.

b. The applied current should remain constant within ±5 percent.

E.4.1.10 Printed wiring board (PWB) contact pin (see detail J). A contact pin is required to complete the electrical circuit with the test plated-through hole. The PWB contact pin shall not exert a force of greater than .5 pounds (0.23 Kg) nor alter the plated-through hole form, fit, or function.



Source: https://assist.dla.mil -- Downloaded: 2016-11-03T17:14Z
Check the source to verify that this is the current version before use.

E.4.2 Materials.

E.4.2.1 Borate buffer solution. The SERA test requires the use of a borate buffer solution. This solution uses reagent grade boric acid, sodium borate ($Na_2B_40_7$ * 10 $H_20$), and deionized water. The recipe is 6.18 grams/liter boric acid and 9.55 grams/liter of sodium borate. The Ph of the borate buffer solution shall range in the range of 8.3 to 8.4. Adjustments to the buffer Ph shall be made using either boric acid or sodium borate additions.

E.4.2.2 Inert gas. An inert gas is required to purge oxygen from the system. Either argon or ultra high purity (99.998 percent) dry nitrogen shall be used.

E.4.2.3 Deionized water. Deionized water comprises a portion of the borate buffer solution and shall be used to rinse the test plated-through hole after completion of the SERA analysis. The deionized water shall be 1 Megohm conductivity or better.

E.4.2.4 Isopropyl alcohol. Isopropyl alcohol is used to rinse the test plated-through hole after the competition of the SERA analysis. Reagent grade isopropyl alcohol, in accordance with A-A-59282, shall be used.

E.4.2.5 Potassium chloride solution (KCI). The SCE reference electrode may be stored in a saturated KCI solution. This solution uses reagent grade potassium chloride, in accordance with A-A-59282, in a saturated solution form.

E.5. PROCEDURE

E.5.1 General. The test procedure shall be performed on three plated-through holes randomly chosen on the printed wiring board or representative test coupon. The SERA test shall be performed just prior to packaging for storage or shipment or immediately upon removal from the manufacturer's protective package. During handling, care shall be exercised to prevent the surfaces being tested from being abraded or contaminated by grease, per–spirants, abnormal atmosphere, or other contaminants. The test procedure consists of the following operations:

a. Proper preparation of SERA system (see E.5.2).

b. Application of test method (see E.5.3).

c. Evaluation of test data (see E.5.4).

d. Proper post test preparation of SERA system (see E.5.5).

E.5.2 Preparation of SERA systems.

a. Initiate inert gas flow into system and allow a minimum of 10 minutes to elapse prior to testing.

b. Turn on digital multimeter and programmable current source and allow a minimum of 10 minutes to elapse prior to testing.

c. Remove reference electrode port and rinse with deionized water. Replace reference electrode port and add sufficient quantity of borate buffer solution to immerse the SCE reference electrode a minimum of 1 inch (25.4 mm).

d. Remove SCE reference electrode from storage container. Rinse with deionized water, wipe with clean soft cloth, and place into reference electrode port. Attach system electrical connections in accordance with figure E–1.

e. Remove and replace test head o-ring seals as required (see E.4.1.2).

f. Close SERA test head together thus seating o-rings together on a representative sample plated-through hole and perform vacuum check on system. No visible air bubbles shall be detected in the test head chamber which would indicate improper sealing.



Source: https://assist.dla.mil -- Downloaded: 2016-11-03T17:14Z
Check the source to verify that this is the current version before use.

E.5.3 Application of test method.

a. The test operator shall record the specimen lot date code and manufacturer for each individual printed wiring board. An individual printed wiring board reference chart for the test plated-through holes and PWB contact pin locations shall be maintained for each test specimen configuration.

b. Insert test specimen onto SERA test head and allow a minimum of 4 seconds for inert gas purging of the test head. Ensure inert gas bubbling is occurring in the reservoir tube.

c. Attach PWB contact pin.

d. Attach electrical source leads.

e. Draw borate buffer solution into test head chamber a minimum of 75 percent of chamber height. Visually monitor test head chamber for leaks.

f. Partially flush test head chamber to 50 percent height to dislodge any gas bubbles which could be trapped in test hole.

g. Input computer data for test specimen and test hole identification. Set current density at 30 µamp per centimeter squared (plated-through hole area shall be calculated as specified in E.5.4), test duration at a minimum of 400 seconds, the number of open circuit samples to be measured, and the number of systems measurements at one reading per second. The minimum test duration may be reduced provided complete plated-through hole reduction has been achieved.

h. Perform SERA test to test duration completion.

i. Remove electrical source leads.

j. Remove PWB contact clamp.

k. Flush borate buffer solution from test hole.

l. Remove test specimen from SERA test head.

m. Rinse test plated-through hole with deionized water saturated cotton swab for a minimum of 3 seconds, then rinse test plated-through hole with isopropyl alcohol saturated cotton swab for a minimum of 3 seconds. Allow test plated-through hole to air dry. The rinsing operations may be conducted for all test holes as a one time operation provided the rinsing operation is completed within 10 minutes of completion of the last test hole on that individual printed wiring board specimen. Other documented rinsing operations may be used provided their effectiveness is as good as or better than the cotton swab rinse process.

E.5.4 Plated-through hole area calculation. The area of plated-through holes shall be determined using:

$$\text{Area} = (2)(\pi)(R1)(H) + [(2)(\pi)(R2^2) - (2)(\pi)(R1^2)]$$

where

H = Printed wiring specimen thickness.
R1 = Plated-through hole radius.
R2 = O-ring internal radius.



Source: https://assist.dla.mil -- Downloaded: 2016-11-03T17:14Z
Check the source to verify that this is the current version before use.

An example of the calculation is as follows:

H = See table E–I for the values for H.
R1 = Plated-through hole radius = .018 inches nominal (0.046 cm).
R2 = O-ring internal radius = 0.075 cm.

$$\text{Area} = (2)(\pi)(0.046)(H) + [(2)(\pi)(0.075)^2 - (2)(\pi)(0.046)^2]$$

$$= (0.22890)(H) + [0.03534 - 0.013295]$$

$$= 0.2890 \text{ cm } (H \text{ cm}) + [0.022045 \text{ cm}^2]$$

TABLE E–I. SERA plated-through hole example calculation data.

| Printed wiring board thickness (inches) | H (centimeters) | Area (centimeters$^2$) |
|---|---|---|
| .020 | 0.0508 | 0.0367 |
| .030 | 0.0762 | 0.0441 |
| .040 | 0.1016 | 0.0514 |
| .050 | 0.1270 | 0.0587 |
| .060 | 0.1524 | 0.0661 |
| .070 | 0.1778 | 0.0734 |
| .080 | 0.2032 | 0.0808 |
| .090 | 0.2286 | 0.0881 |
| .100 | 0.2540 | 0.0955 |
| .110 | 0.2794 | 0.1028 |

E.5.5 Evaluation of test data. The change in reduction voltage shall be plotted versus the charge density (current density against time). This SERA curve generated shall be differentiated and then incorporate the following moving window average, curve smoothing function:

V(n) = SUM [V(n-5) through V(n+5)] / 11

The following eight SERA parameters shall be calculated from the differentiated and smoothed SERA curve using the following threshold limits listed below. Figure E–2 illustrates these parameters and threshold limits on an example SERA curve.

1. Voc = The final open circuit voltage measured for the SERA differentiated/smoothed curve.
2. Q1 = The area under the curve defined by: Nmin1 threshold value (defined constant value).
3. V2 = The voltage on the differentiated/smoothed curve defined by: (Nmin3 + Nmin1 threshold values) / 2.
4. Q2 = The area under the curve defined by: Nmin3 threshold value – Nmin 1 threshold value.
5. V3 = The voltage on the differentiated/smoothed curve defined by: (Nmin5 + Nmin3 threshold value)/2.
6. Q3 = The area under the curve defined by: Nmin5 threshold value – Nmin3 threshold value.



Source: https://assist.dla.mil -- Downloaded: 2016-11-03T17:14Z
Check the source to verify that this is the current version before use.

7. Vf = Most negative reduction voltage measured for the SERA differentiated/smoothed curve.

8. Qt = Total reduction charge (summation of Q1 + Q2 + Q3) for the SERA differentiated/smoothed curve.

Threshold constraints:

a. Constant = First point on curve for measured voltage before applying current.

b. Nmin1 = First point on curve where measured voltage < –0.85 volts.

c. Nmin3 = Minimum calculated dVoltage between N1 and N2.

N1 = First point between Nmin1 and N2 where calculated dVoltage < –0.003 volts.

N2 = Last point on curve where measured voltage < –1.3 volts.

d. Nmin5 = Last point on curve where calculated dVoltage < –1.3 volts.

Unless otherwise agreed upon by the printed wiring board fabricator and user, the SERA parameter for V2 shall meet the minimum acceptable value listed in table E–II. The other seven SERA parameters shall be within the ranges listed in table E–III for a ROM0 or ROM1 flux in accordance with J-STD-004. The printed wiring board soldering performance in the manufacturing process will be directly related to the specific flux used in the soldering process. It is the printed wiring board users responsibility to document the critical SERA parameter levels for other specific flux systems.

TABLE E–II. Minimum acceptable V2 value.

| SERA parameter | Minimum acceptable value |
|---|---|
| V2 | Equal to or more positive than –1.07 V |

TABLE E–III. SERA values for ROM0 or ROM1 flux in accordance with J-STD-004.

| SERA parameter | Minimum acceptable value |
|---|---|
| Voc | –0.461 to –0.613 V |
| Q1 | 0.0 to +1.312 mC/cm$^2$ |
| Q2 | 0.0 to +3.823 mC/cm$^2$ |
| Q3 | 0.0 to +3.299 mC/cm$^2$ |
| V3 | –1.29 to –1.412 V |
| Vf | –1.365 to –1.466 V |
| Qt | +2.005 to +5.985 mC/cm$^2$ |



Source: https://assist.dla.mil -- Downloaded: 2016-11-03T17:14Z
Check the source to verify that this is the current version before use.

E.5.6 Proper post test preparation of SERA system.

a. Shut off inert gas flow into system.

b. Shut off digital multimeter and programmable current source.

c. Remove SCE reference electrode, rinse with deionized water and wipe clean with clean soft cloth. Place SCE reference electrode in storage container.

d. Remove reference electrode port and dump out borate buffer solution. Rinse inner and outer surfaces of reference electrode port with deionized water. Replace reference electrode port into system.

e. Remove o-rings and dispose of as required (see E.4.1.2). Rinse test head o-ring seal with deionized water and wipe dry with clean soft cloth.

f. Empty reservoir of borate buffer solution, rinse with deionized water, and refill with buffer solution as required (see E.4.1.1).

E.6. NOTES

E.6.1 NOTES regarding the SERA test. The equipment described herein is a result of a United States Army MANTECH Program investment. SERA is a scientific means of measuring solderability of circuit boards and components. The technology is based upon measurements of the type and quantity of oxides using SERA method. Rockwell International at Thousand Oaks, CA is the patent holder, and the United States Army MANTECH Program was successful in developing, proving, commercializing, and standardizing the equipment and processes. Round robin tests by a Government-industry team were successfully completed in the standardization effort. The United States Army has a perpetual royalty free license and the equipment is currently on a number of weapons production lines. The technical point of contact for future inquiries should be directed to the sole source supplier:

ECI Technology
1 Madison Street
East Rutherford, NJ 07073

Phone: (973) 773-8686
Facsimile: (973) 773-8797
Electronic mail: ecitechnology@eci.com
URL: http://www.ecitechnology.com



Source: https://assist.dla.mil -- Downloaded: 2016-11-03T17:14Z
Check the source to verify that this is the current version before use.

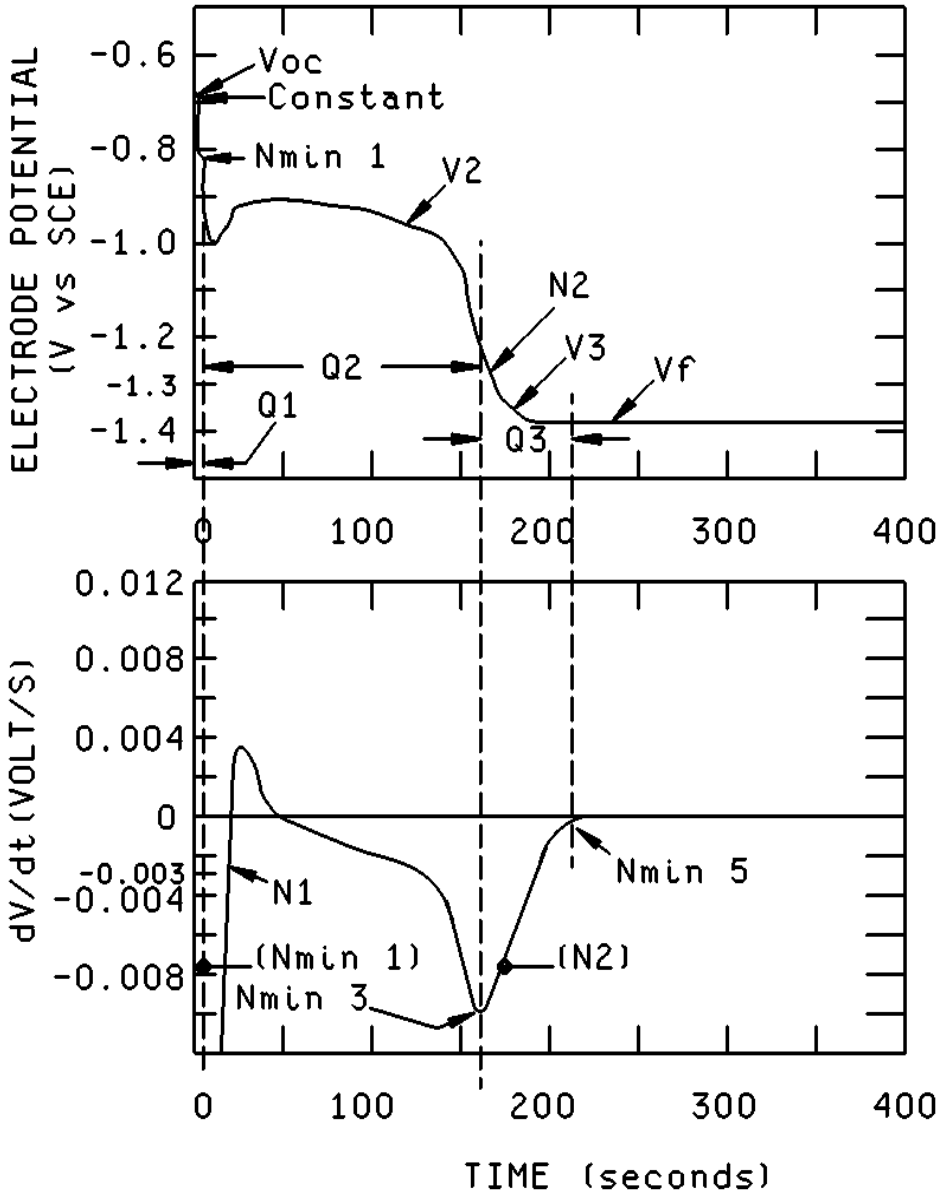


FIGURE E–2. Example SERA differentiated/smoothed curve.



Source: https://assist.dla.mil -- Downloaded: 2016-11-03T17:14Z
Check the source to verify that this is the current version before use.

This page intentionally left blank.



Source: https://assist.dla.mil -- Downloaded: 2016-11-03T17:14Z
Check the source to verify that this is the current version before use.

# EXTERNAL VISUAL AND DIMENSIONAL ILLUSTRATIONS

## F.1. SCOPE

F.1.1 Scope. This appendix establishes uniform criteria for evaluating and classifying defects on partially complete or completed printed wiring boards, qualification test specimens, and test coupons during visual and dimensional inspections. This appendix describes the desired, acceptable, and nonconforming conditions of printed wiring boards that are externally observable. It represents the visual interpretation of minimum requirements set forth in appendix A of this specification. The criteria shall apply whether a 100-percent inspection or a sampling plan procedure is used. This appendix is a mandatory part of this specification for manufacturers qualified to the QPL product assurance level of appendix A. The information contained herein is intended for compliance.

## F.2. APPLICABLE DOCUMENTS

This section is not applicable to this appendix.

## F.3 EXTERNALLY OBSERVABLE CHARACTERISTICS

F.3.1 General. This section addresses those characteristics which are observable from the surface of printed wiring boards. This includes those characteristics that are external and internal in the printed wiring board, but visible from the surface (see figures F–1 through F–12 for examples).

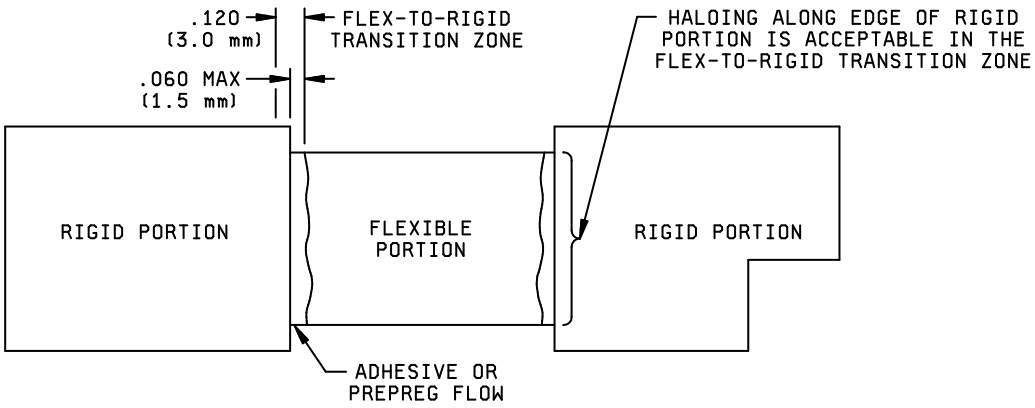


FIGURE F–1. Transition zone for flexible to rigid junctions.



Source: https://assist.dla.mil -- Downloaded: 2016-11-03T17:14Z
Check the source to verify that this is the current version before use.

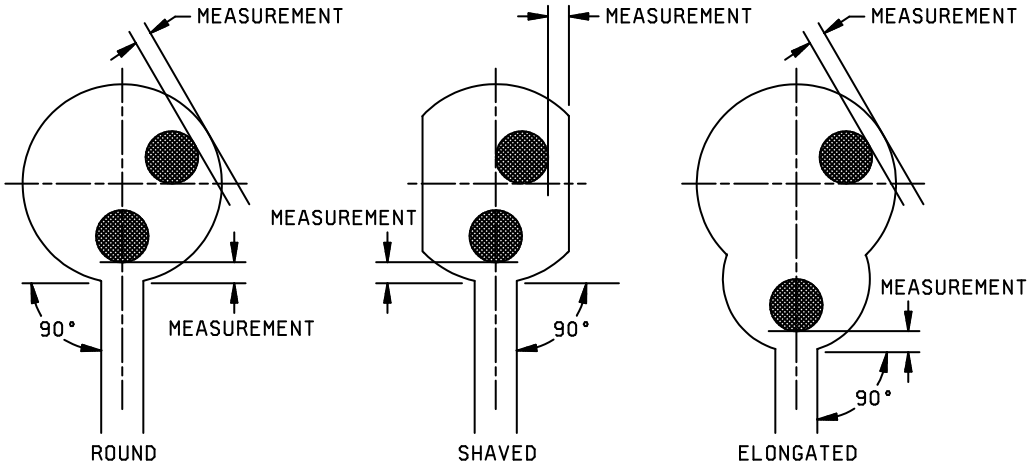


FIGURE F–2. External annular ring measurement.

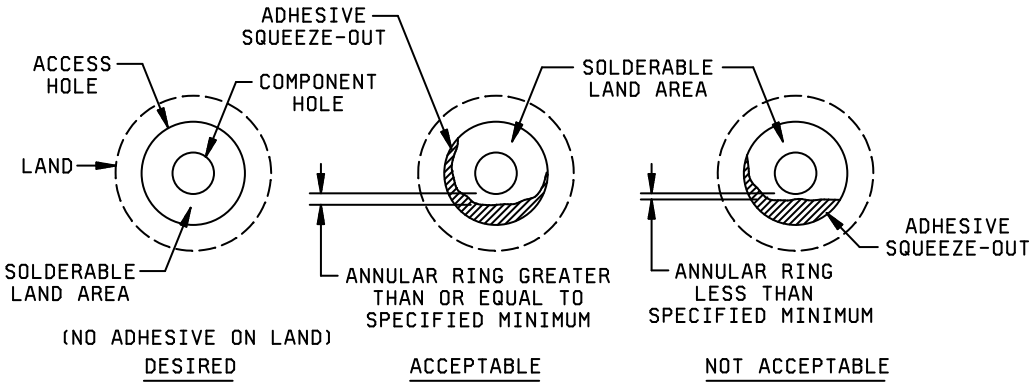


FIGURE F–3. Adhesive on land.



Source: https://assist.dla.mil -- Downloaded: 2016-11-03T17:14Z
Check the source to verify that this is the current version before use.

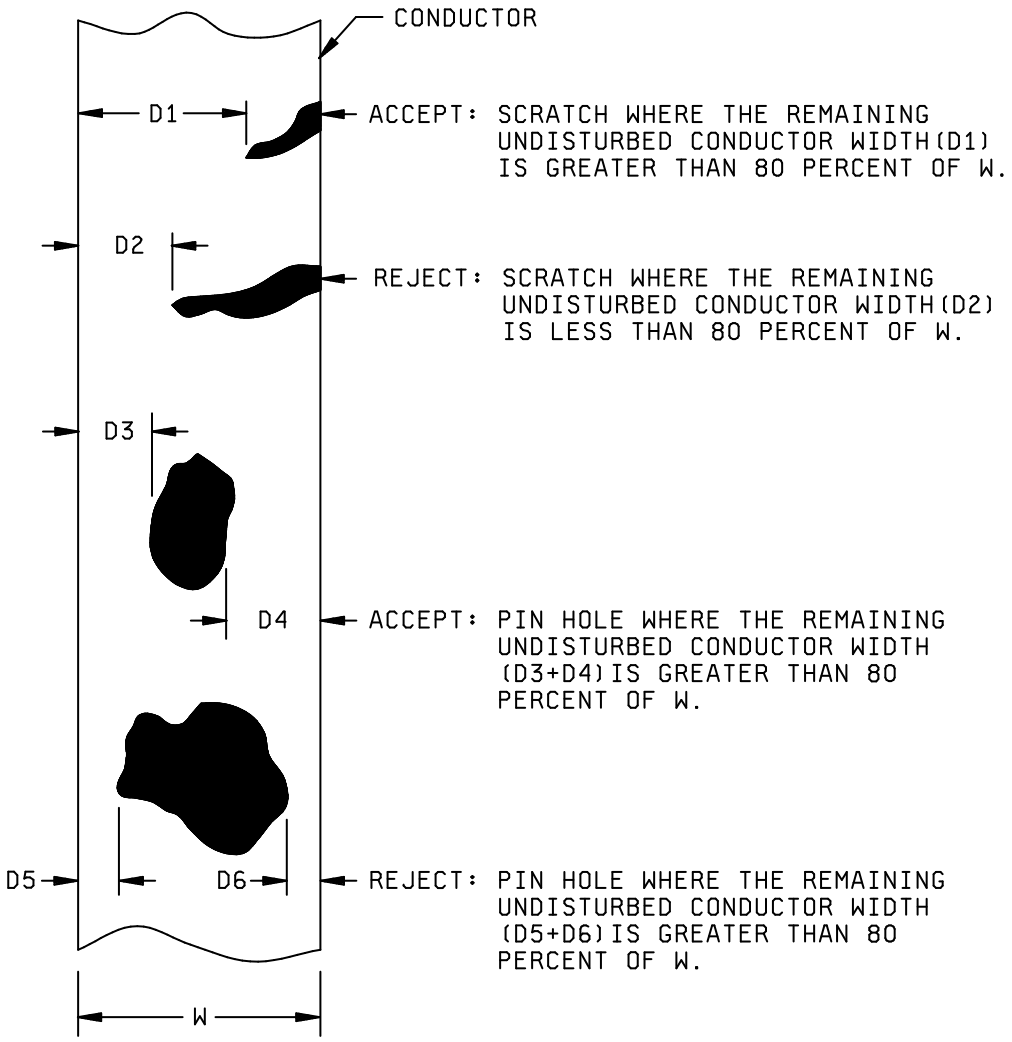


FIGURE F–4. Conductor pattern imperfections.



Source: https://assist.dla.mil -- Downloaded: 2016-11-03T17:14Z
Check the source to verify that this is the current version before use.

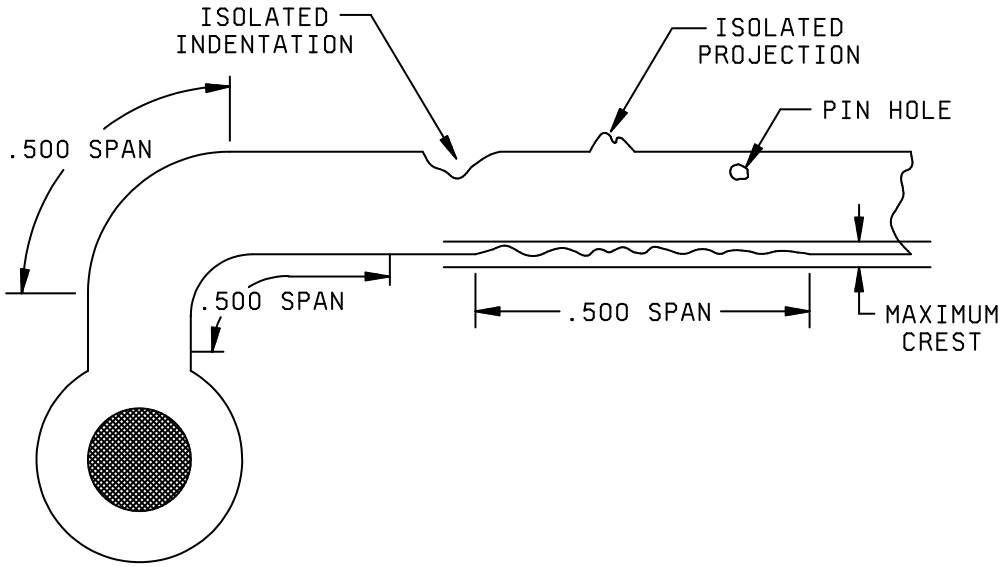


FIGURE F–5. Conductor edge definition imperfection measurement.



Source: https://assist.dla.mil -- Downloaded: 2016-11-03T17:14Z
Check the source to verify that this is the current version before use.

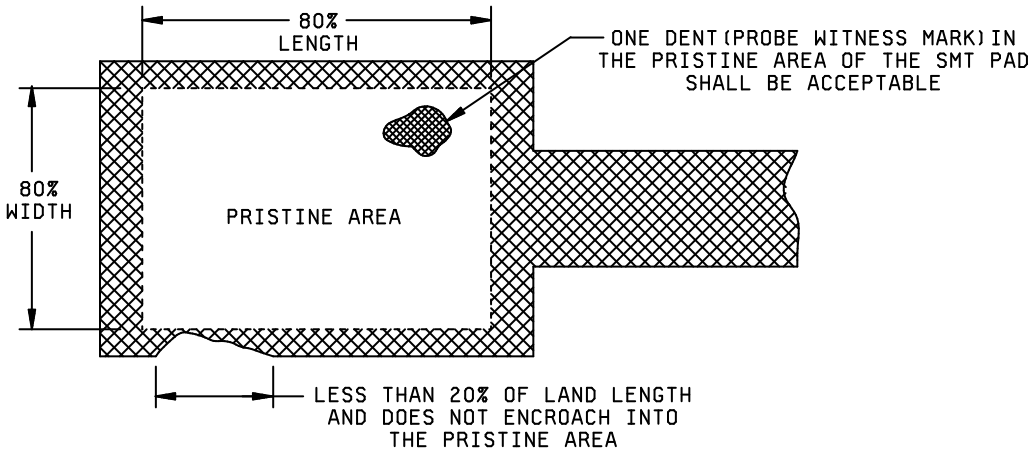


FIGURE F–6. Rectangular surface mount lands.

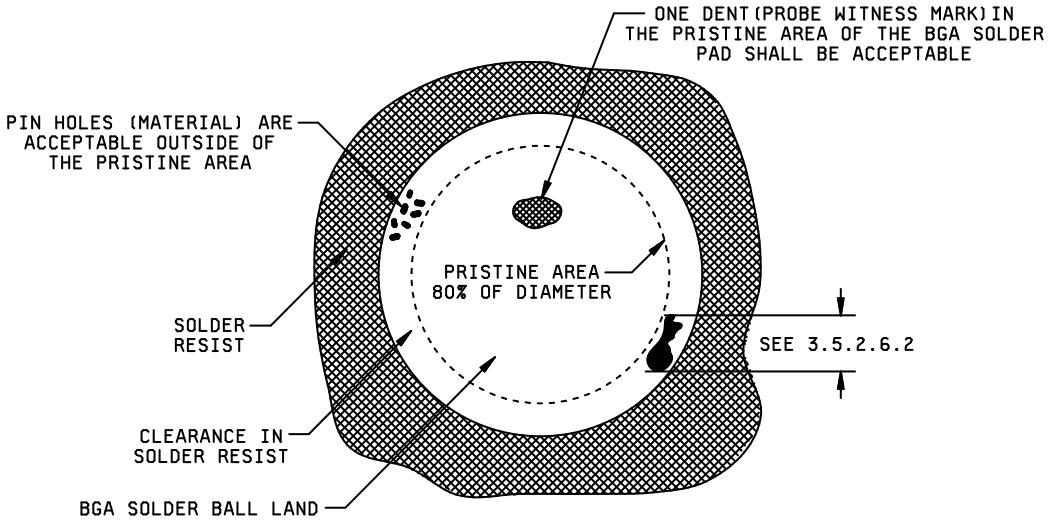


FIGURE F–7. Round surface mount lands (BGA pads).



Source: https://assist.dla.mil -- Downloaded: 2016-11-03T17:14Z
Check the source to verify that this is the current version before use.

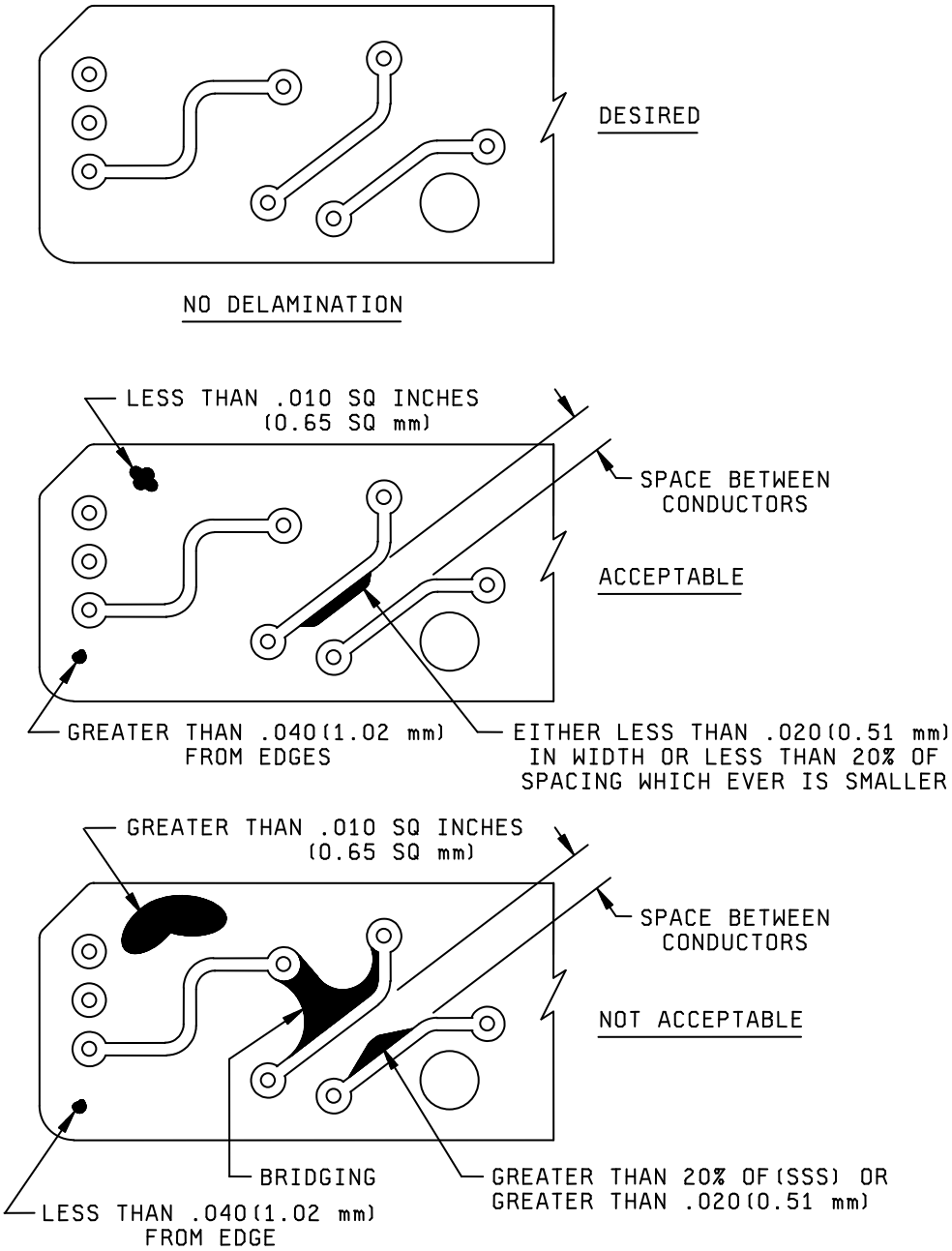


FIGURE F–8. Cover material separations.



Source: https://assist.dla.mil -- Downloaded: 2016-11-03T17:14Z
Check the source to verify that this is the current version before use.

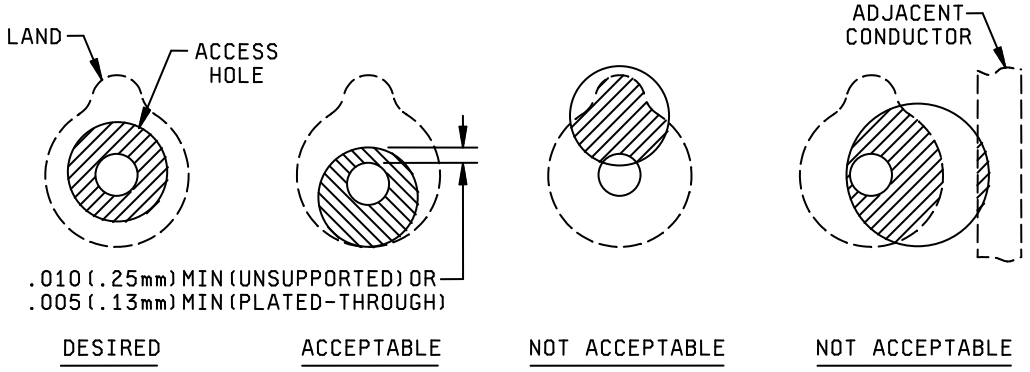


FIGURE F–9. Cover layer access hole registration.

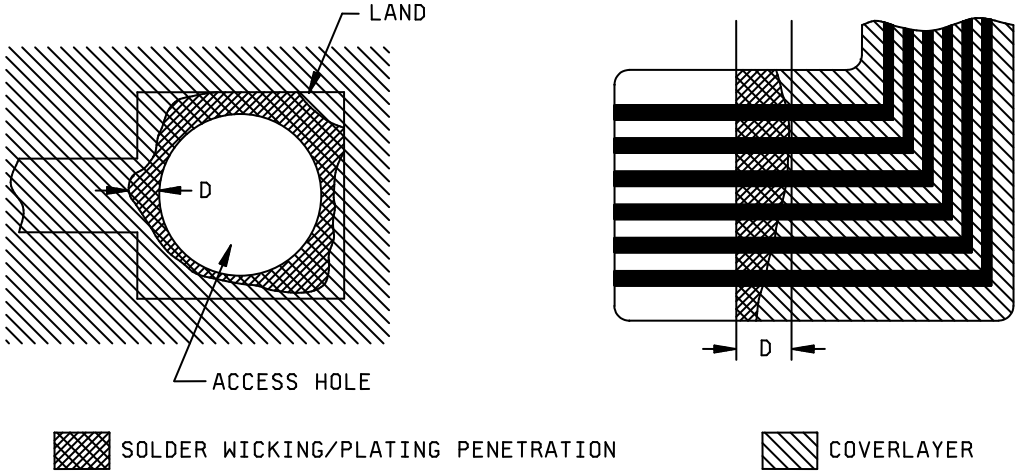


NOTE: Dimension D is the distance of maximum wicking penetration.

FIGURE F–10. Cover layer, wicking of conductor surface finish.



Source: https://assist.dla.mil -- Downloaded: 2016-11-03T17:14Z
Check the source to verify that this is the current version before use.

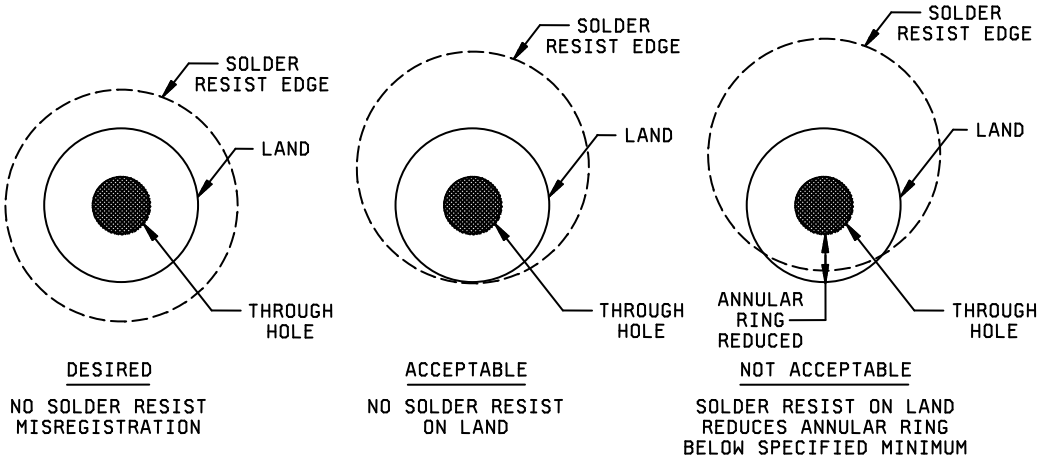


FIGURE F–11. Solder mask registration.

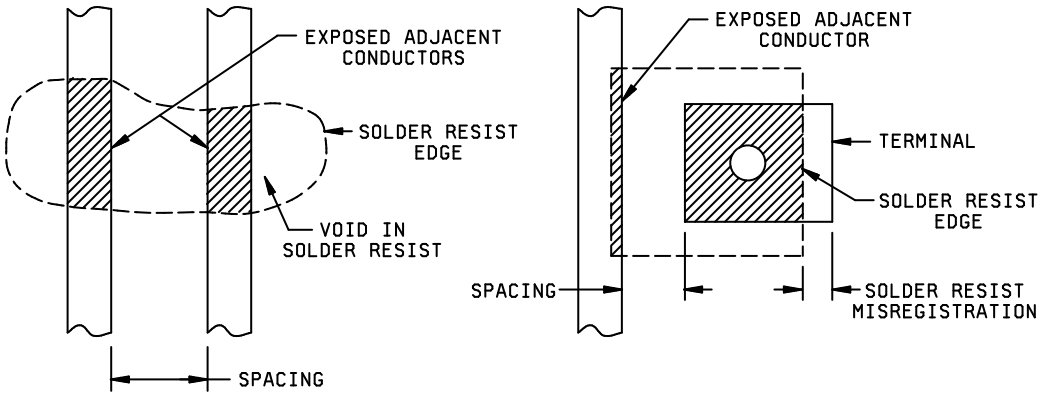


FIGURE F–12 Solder mask deviations.



Source: https://assist.dla.mil -- Downloaded: 2016-11-03T17:14Z
Check the source to verify that this is the current version before use.

# METALLOGRAPHIC ILLUSTRATIONS

## G.1. SCOPE

G.1.1 Scope. This appendix establishes uniform criteria for evaluating and classifying characteristics and defects which are observable using metallographic techniques on partially complete or completed printed wiring boards, qualification test specimens, and test coupons. This appendix describes the preferred, acceptable, and nonconforming conditions that are either externally or internally observable. It represents the visual interpretation of minimum requirements set forth in appendix A of this specification. The criteria shall apply whether a 100-percent inspection or a sampling plan procedure is used. This appendix is a mandatory part of this specification for manufacturers qualified to the QPL product assurance level of appendix A. The information contained herein is intended for compliance.

## G.2. APPLICABLE DOCUMENTS

This section is not applicable to this appendix.

## G.3 INTERNALLY OBSERVABLE CHARACTERISTICS

G.3.1 General. This section addresses those characteristics which are observable during metallographic examination. This includes those characteristics that are both internal and on the surface layer of the printed wiring board test specimen (see figures G–1 through G–18 for examples).

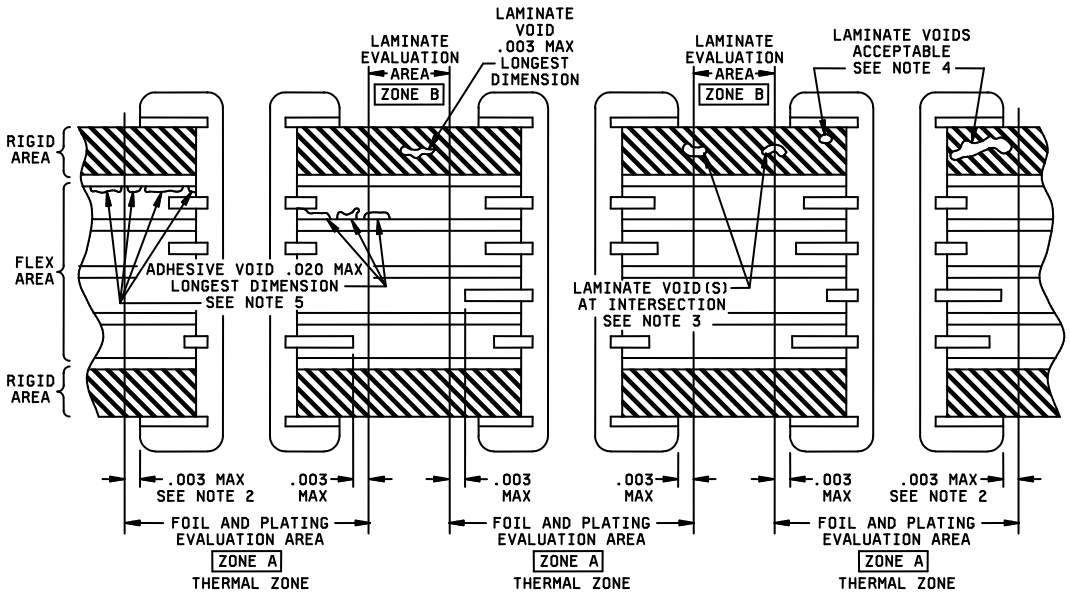


FIGURE G–1. Typical plated-through hole cross section after stress testing.



Source: https://assist.dla.mil -- Downloaded: 2016-11-03T17:14Z
Check the source to verify that this is the current version before use.

NOTES:

1. Dimensions are in inches. Millimeter equivalents are given for general information only.
2. Typically beyond land edge most radially extended.
3. Voids at intersection of zone A and zone B. Laminate voids greater than .0032 inch (0.08 mm) that extend into zone B are rejectable.
4. Laminate voids are not evaluated in zone A.
5. Multiple adhesive voids between two adjacent plated-through holes in the same plane shall not have a combined length exceeding .02 inch (0.5 mm).

FIGURE G–1. Typical plated-through hole cross section after stress testing – Continued.

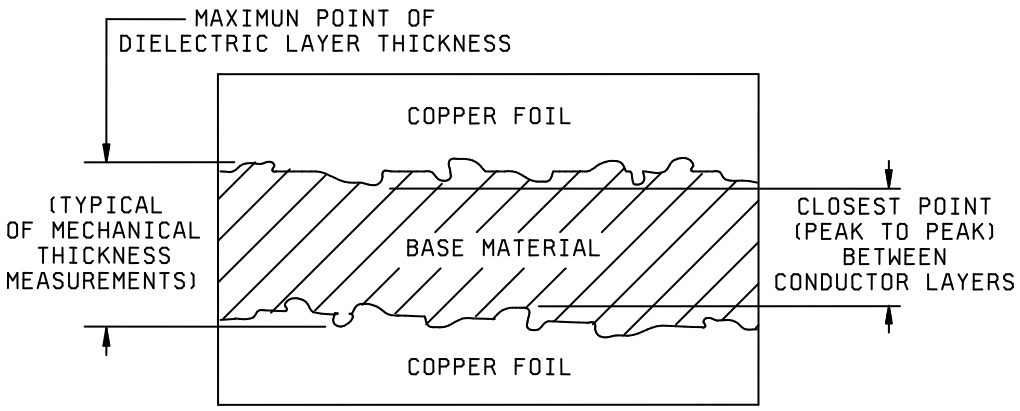


FIGURE G–2. Dielectric thickness measurement.



Source: https://assist.dla.mil -- Downloaded: 2016-11-03T17:14Z
Check the source to verify that this is the current version before use.

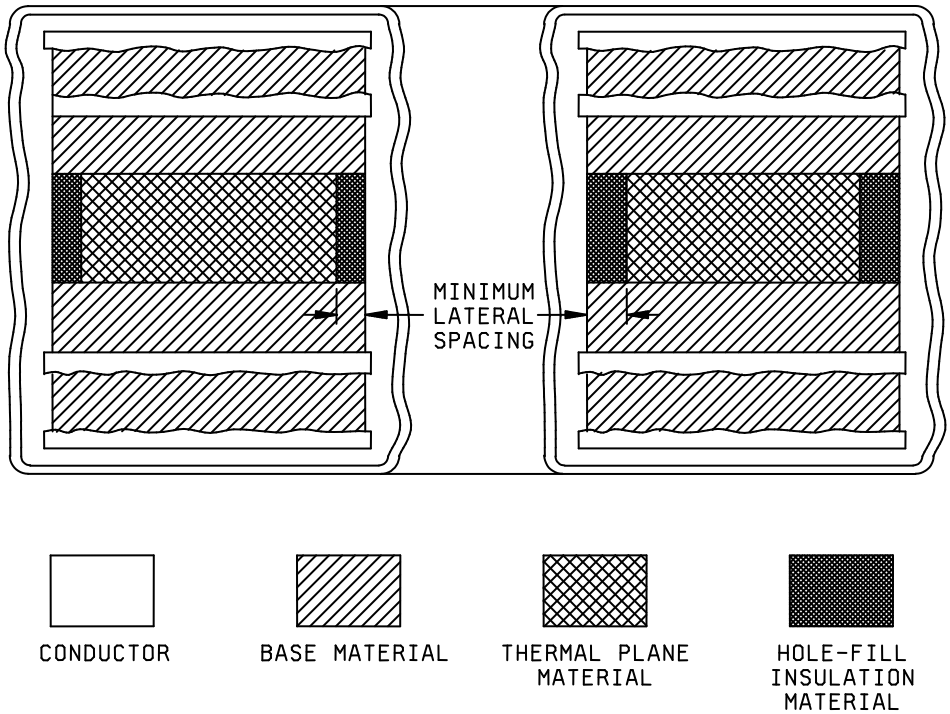


FIGURE G–3. Isolated heat sink plane dielectric spacing.

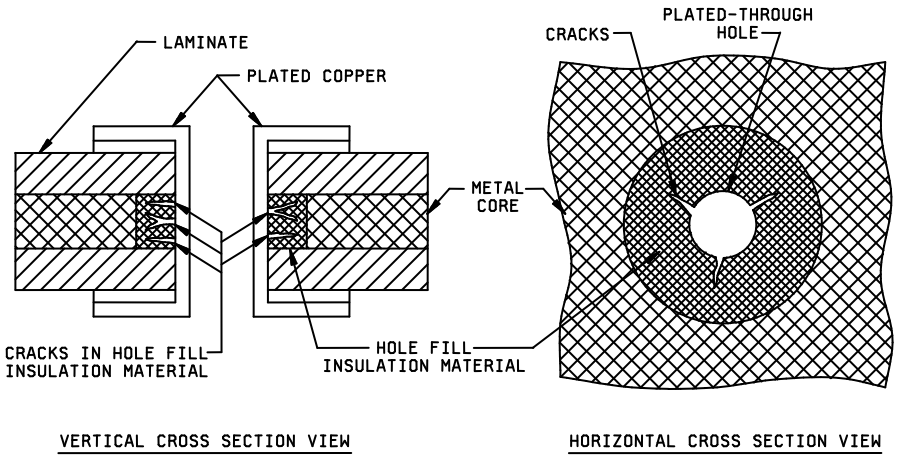


FIGURE G–4. Insulation material cracks, metal cores or heat sink planes.



Source: https://assist.dla.mil -- Downloaded: 2016-11-03T17:14Z
Check the source to verify that this is the current version before use.

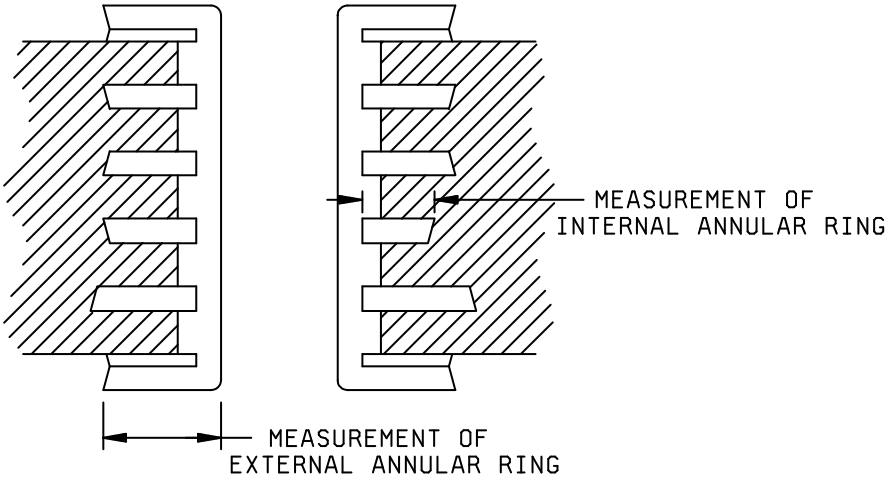


FIGURE G–5. Internal annular ring measurements.

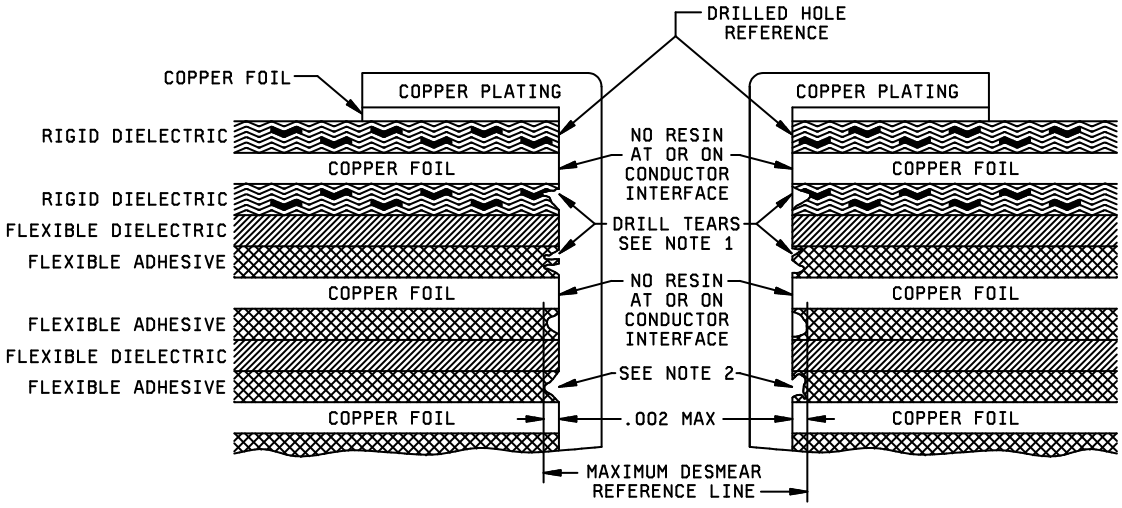


NOTES:
1. Drill tears are not measured. Drill tear-outs shall be enclosed.
2. The adhesive or dielectric material removed shall be enclosed.

FIGURE G–6. Smear removal.



Source: https://assist.dla.mil -- Downloaded: 2016-11-03T17:14Z
Check the source to verify that this is the current version before use.

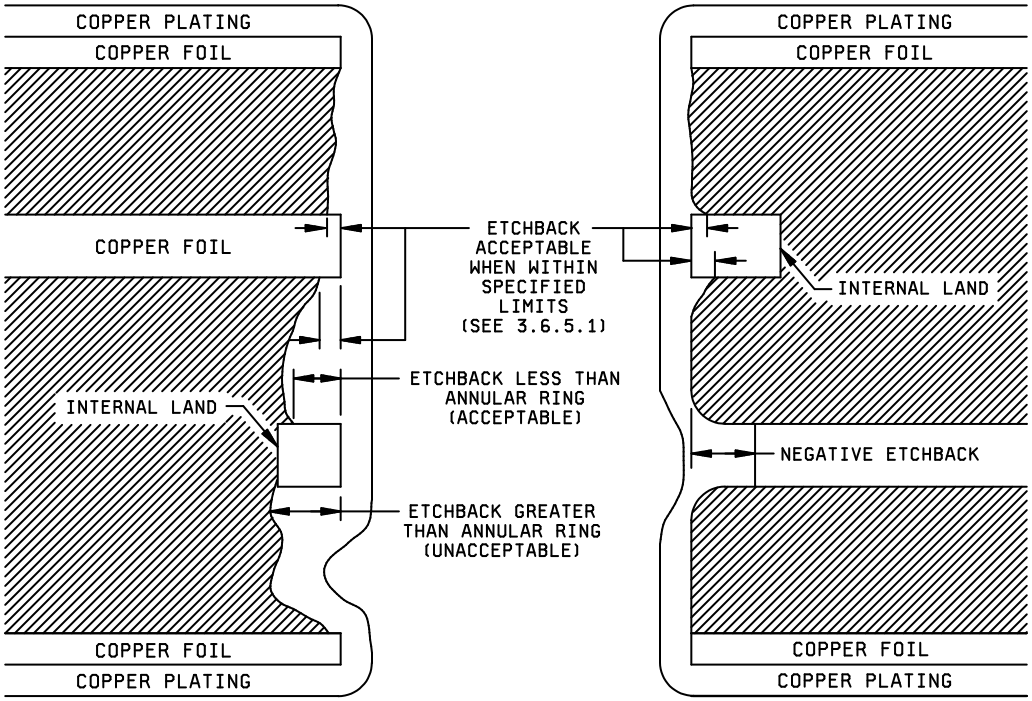


FIGURE G–7. Etchback.

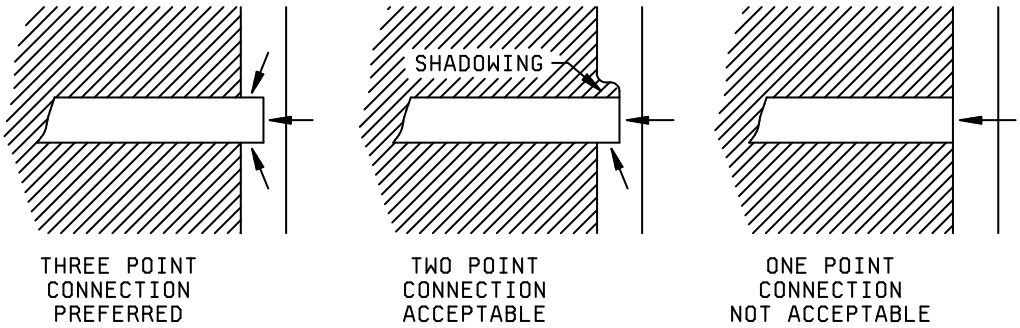


FIGURE G–8. Forms of plating connections to internal layers.



Source: https://assist.dla.mil -- Downloaded: 2016-11-03T17:14Z
Check the source to verify that this is the current version before use.

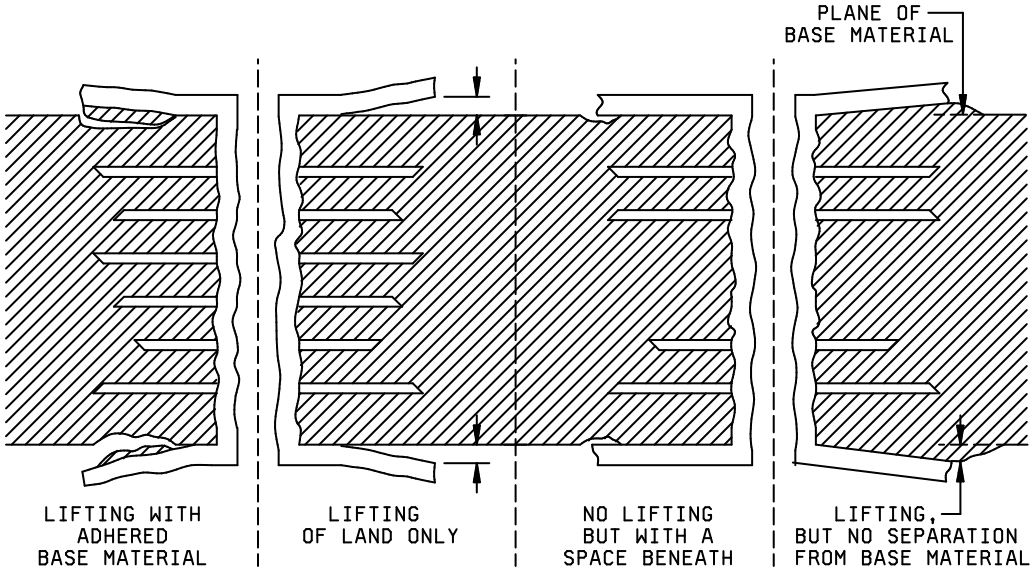


FIGURE G–9. Types of lifted lands.

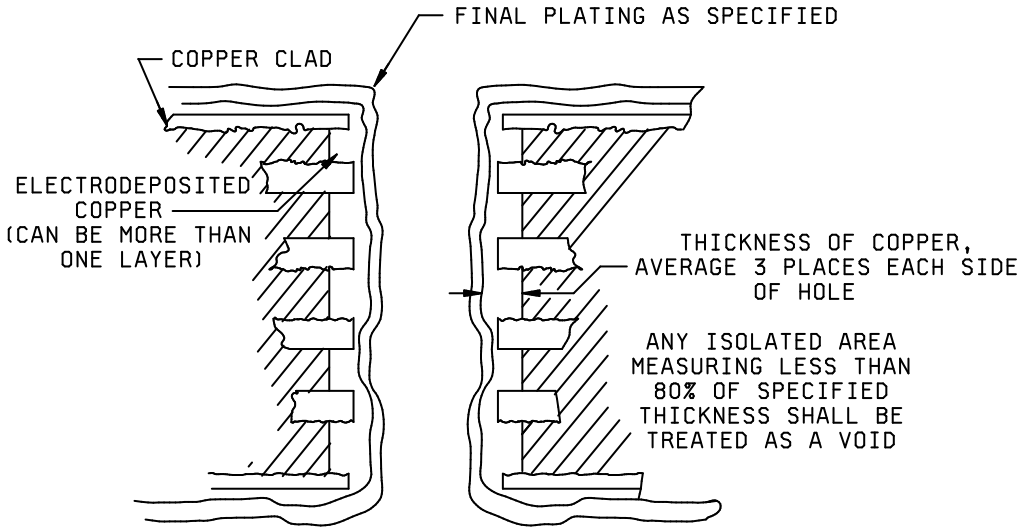


FIGURE G–10. Copper plating thickness.



Source: https://assist.dla.mil -- Downloaded: 2016-11-03T17:14Z
Check the source to verify that this is the current version before use.

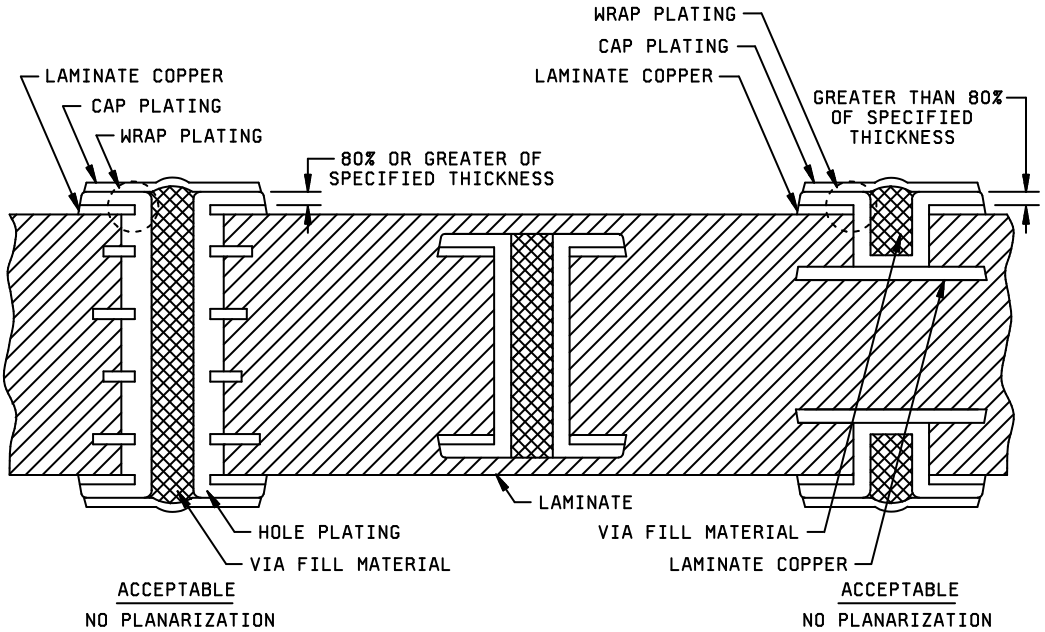


FIGURE G–11. Acceptable, non-planarized plated-through hole wrap copper plating.

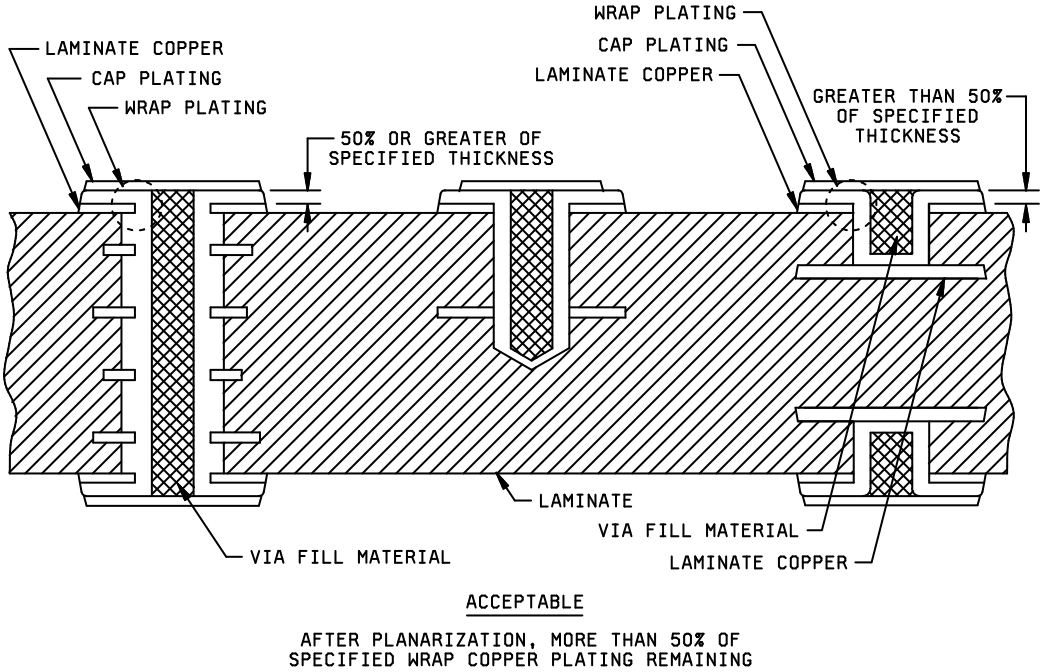


FIGURE G–12. Acceptable planarized plated-through hole wrap copper plating.



Source: https://assist.dla.mil -- Downloaded: 2016-11-03T17:14Z
Check the source to verify that this is the current version before use.

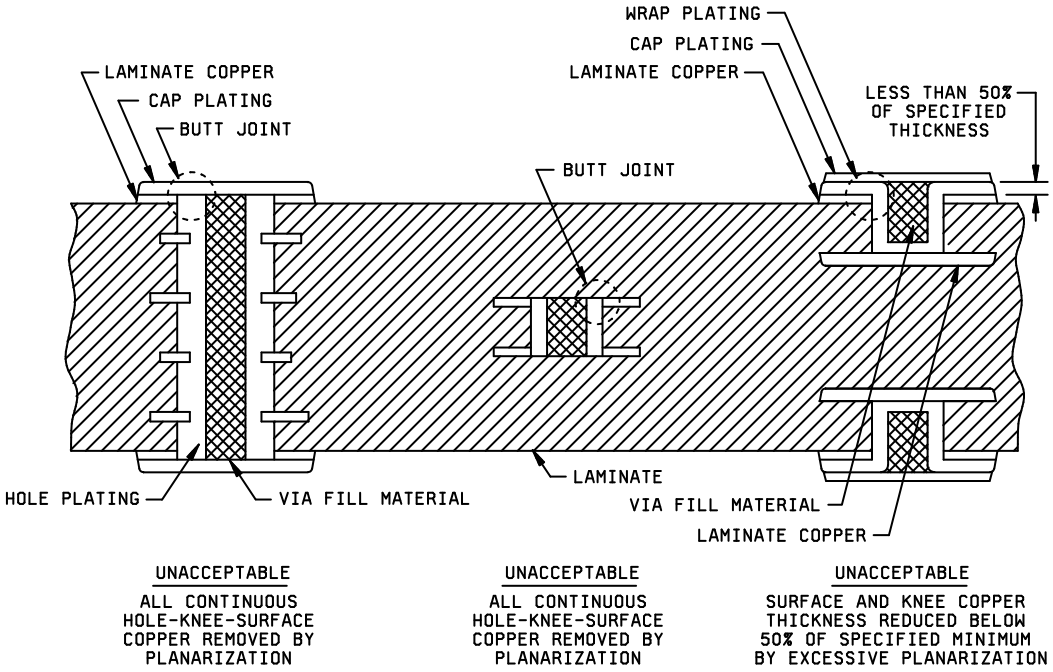


FIGURE G–13. Unacceptable planarized plated-through hole wrap copper plating.

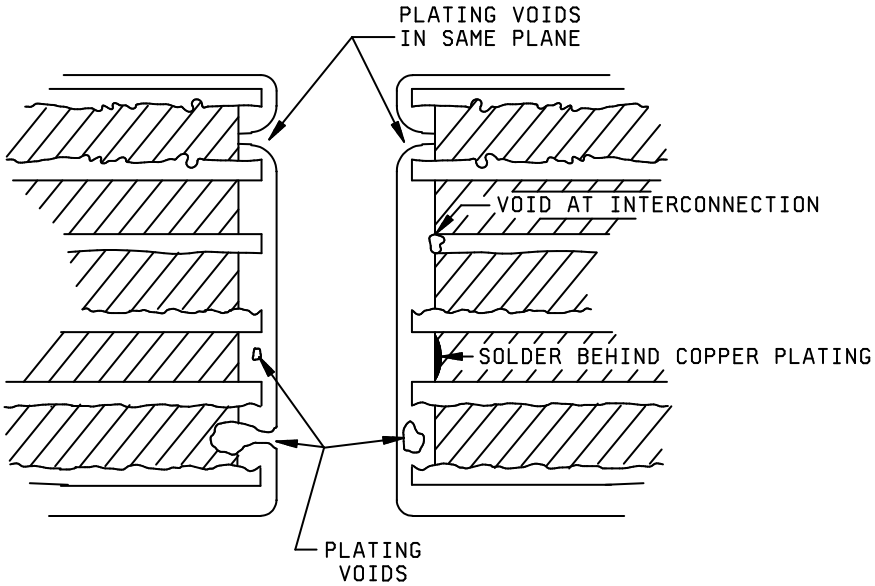


FIGURE G–14. Copper plating voids.



Source: https://assist.dla.mil -- Downloaded: 2016-11-03T17:14Z
Check the source to verify that this is the current version before use.

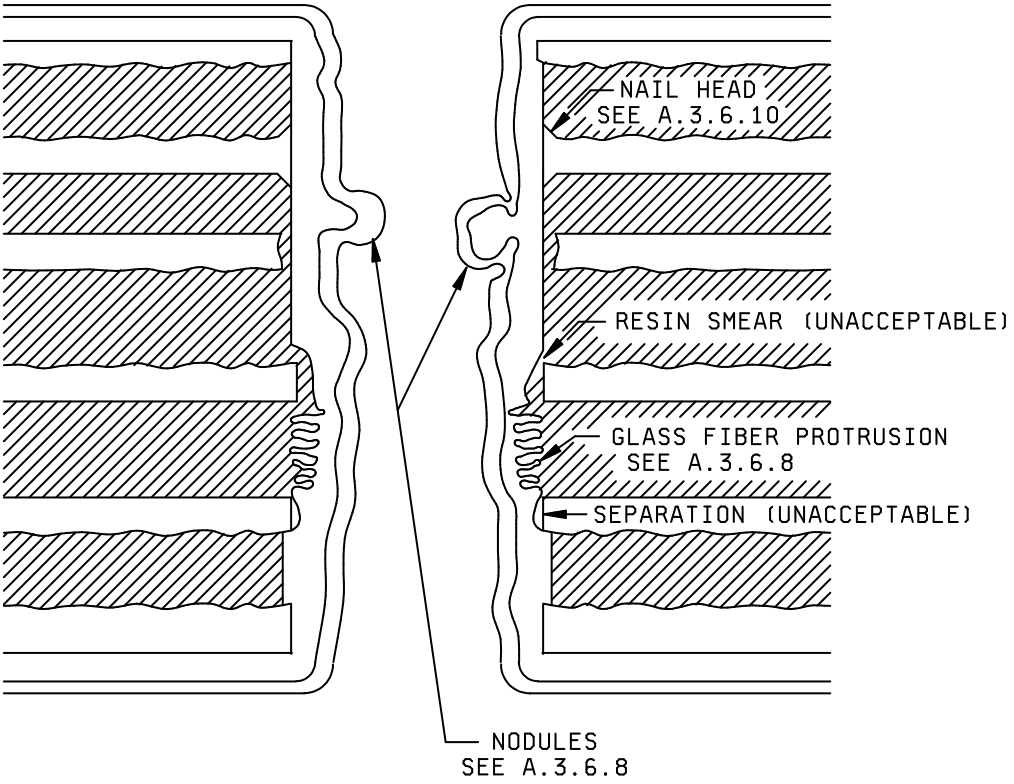


FIGURE G–15. Plated-through hole deficiencies.



Source: https://assist.dla.mil -- Downloaded: 2016-11-03T17:14Z
Check the source to verify that this is the current version before use.

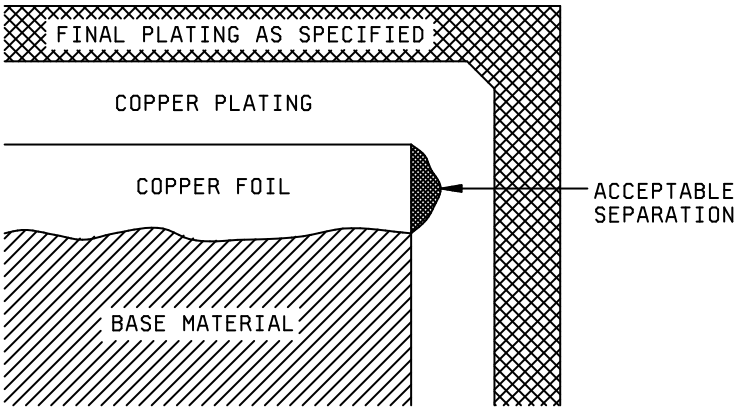


FIGURE G–16. Acceptable separation at external copper foil.

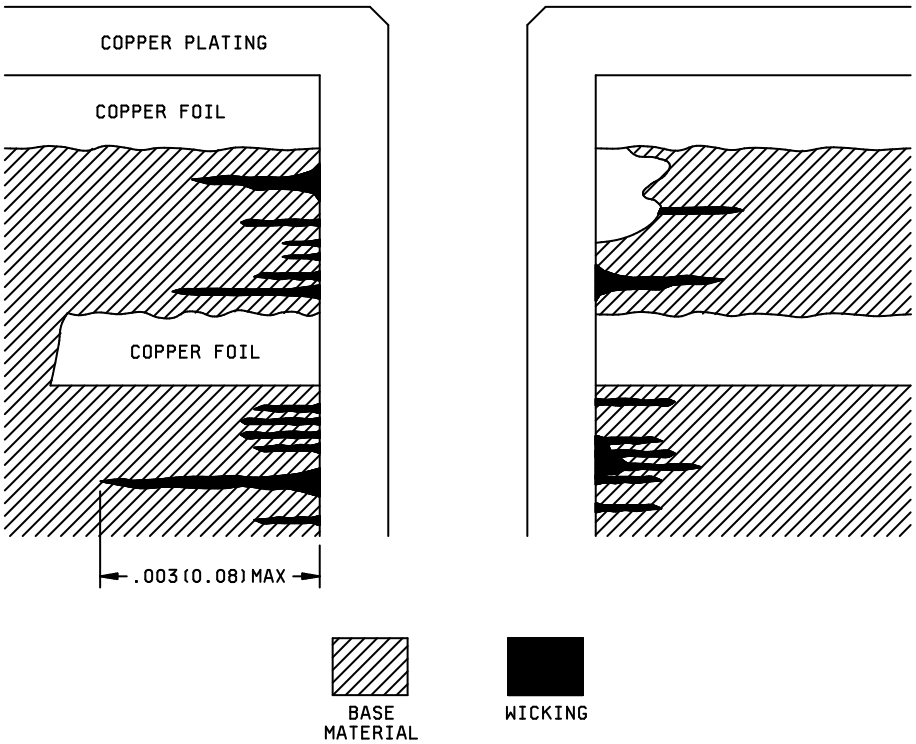


FIGURE G–17. Wicking.



Source: https://assist.dla.mil -- Downloaded: 2016-11-03T17:14Z
Check the source to verify that this is the current version before use.

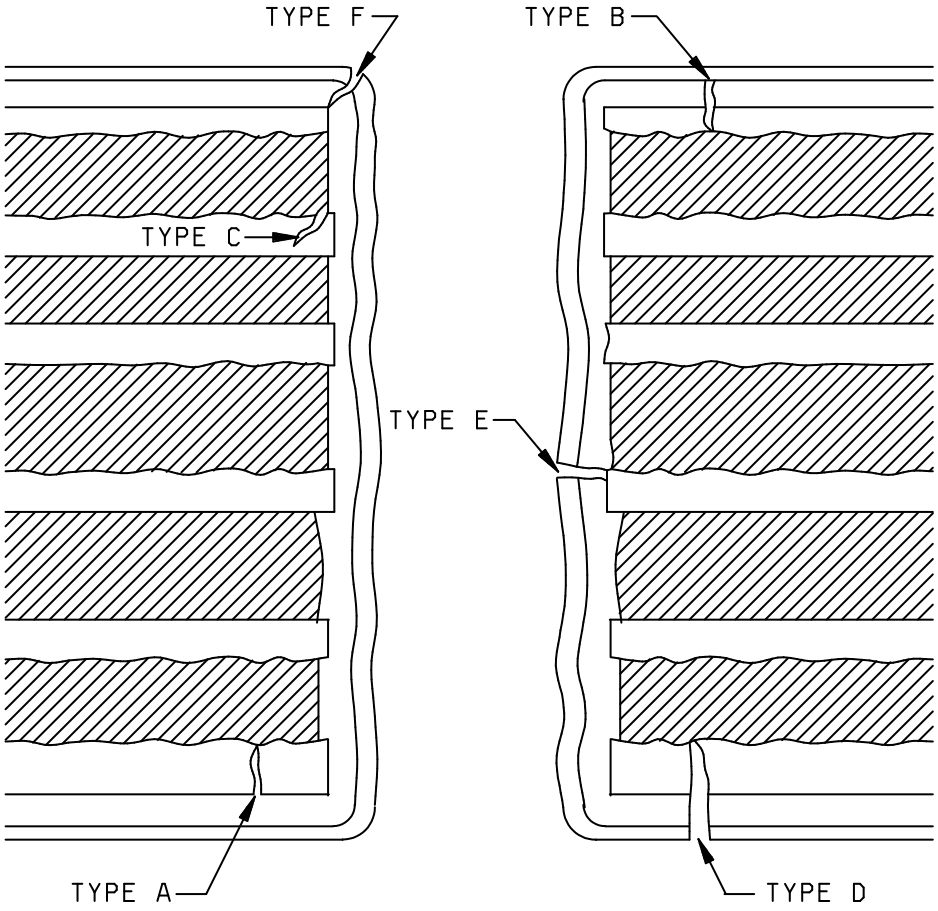


FIGURE G–18. Metallic cracks.



Source: https://assist.dla.mil -- Downloaded: 2016-11-03T17:14Z
Check the source to verify that this is the current version before use.

This page intentionally left blank.



Source: https://assist.dla.mil -- Downloaded: 2016-11-03T17:14Z
Check the source to verify that this is the current version before use.

# QUALITY CONFORMANCE TEST CIRCUITRY

## H.1. SCOPE

H.1.1 Scope. This appendix contains requirements, information, and guidance concerning design standards IPC-2221 and IPC-2223. This appendix is a mandatory part of this specification for manufacturers qualified to the QPL product assurance level of appendix A. The information contained herein is intended for compliance.

## H.2. APPLICABLE DOCUMENTS

H.2.1 General. The documents listed in this section are specified in sections H.3 and H.4 of this specification. This section does not include documents cited in other sections of this specification or recommended for additional information or as examples. While every effort has been made to ensure the completeness of this list, document users are cautioned that they must meet all specified requirement documents cited in sections H.3 and H.4 of this specification, whether or not they are listed.

H.2.2 Non–Government publications. The following documents form a part of this document to the extent specified herein. Unless otherwise specified, the issues of these documents are those cited in the solicitation or contract.

IPC – ASSOCIATION CONNECTING ELECTRONICS INDUSTRIES (IPC)

| | | |
|---|---|---|
| IPC-T-50 | – | Terms and Definitions for Interconnecting and Packaging Electronic Circuits. |
| IPC-2221 | – | Generic Standard on Printed Board Design. |
| IPC-2223 | – | Sectional Design Standard for Flexible Printed Boards. |
| IPC-TM-650 | – | Test Methods Manual. |
| IPC-100043 | – | Master Drawing for 10 Layer Multilayer Printed Boards. |
| IPC-100044 | – | Master Drawing for 4 Layer Multilayer Printed Boards. |
| J-STD-003 | – | Solderability Tests for Printed Boards. |

(Application for copies should be addressed to the IPC - Association Connecting Electronics Industry, 3000 Lakeside Drive, Suite 309 S, Bannockburn, IL 60015-1249 or http://www.ipc.org.)

(Non-Government standards and other publications are normally available from the organizations that prepare or distribute the documents. These documents also may be available in or through libraries or other informational services.)

H.2.3 Order of precedence. Unless otherwise noted herein or in the contract, in the event of a conflict between the text of this document and the references cited herein, the text of this document takes precedence. Nothing in this document, however, supersedes applicable laws and regulations unless a specific exemption has been obtained.

## H.3 QUALITY CONFORMANCE TEST CIRCUITRY (QCTC) REQUIREMENTS

H.3.1 General. Test coupons or QCTC strips shall be a part of every inspection panel on which printed wiring boards intended to be compliant to appendix A are fabricated. When test coupon retention is required for traceability it is recommended that an additional set of test coupons be combined into a common QCTC strip. Figure H–1 shows an example of QCTC strip location and placement concepts.



Source: https://assist.dla.mil -- Downloaded: 2016-11-03T17:14Z
Check the source to verify that this is the current version before use.

H.3.1.1 Panel location and placement of test coupons. Except for the "A" and "B" test coupons, the printed wiring board manufacturer may position the QCTC strip or individual test coupons to optimize panelization, tooling and material utilization; however, at least one hole in each test coupon shall be located on the same grid as the printed wiring board features. The location of the "A" and "B" test coupons shall be positioned no further than .5 inch (12.7 mm) of the printed wiring board profile and close to the panel corner to reflect fabrication and copper plating characteristics as displayed on figure H–1.

H.3.1.2 Performance and reliability verification test coupons. The recommended minimum number of test coupons that are required for performing the in-process, groups A, B, and C verifications of appendix A are specified in table H–I.

H.3.1.3 Process control and acquiring activity required test coupons. Test coupons of custom configuration used for process control or acquiring activity purposes may be added to the production panel. These custom configuration test coupons should incorporate features on the same dimensional plane to ensure compatibility with the required performance verification test coupons specified in table H–I. All applicable custom configuration test coupons shall be defined on the master artwork, the master drawing, or added to the production artwork by the manufacturer.

H.3.2 QCTC strip identification. When test coupons are ganged together in a QCTC strip, the strip shall contain space for QCTC strip identification and traceability marking. Unless otherwise specified, the minimum identification marking shall be as follows:

a) The printed wiring board part identification number (see A.3.8).

b) The manufacturer's Commercial and Government Entity (CAGE) code (see A.3.8.1).

c) The lot date code (see A.3.8.5).

d) The traceability code or identification (see A.3.9).

In addition, any acquiring activity specified special coding systems may be used, provided they are defined on the master drawing.

H.3.3 Using table H–I. The requirements for test coupon quantity and placement on the inspection panel are codified using a 4 digit dash number under the printed wiring board types of table H–I. The last column of table H–I uses a 2 digit code to specify the inspection group the test coupon is typically needed for. The codes for test coupon quantity on an inspection panel are specified in H.3.3.1. The codes for test coupon placement on an inspection panel are specified in H.3.3.2. The codes for test coupon inspection group usage are specified in H.3.3.3. An example of the 4 digit dash number is "1–ML". This dash number designates that a minimum of one test coupon of this type is required on the inspection panel and that its placement is the manufacturer's option.



Source: https://assist.dla.mil -- Downloaded: 2016-11-03T17:14Z
Check the source to verify that this is the current version before use.

H.3.3.1 Test coupon quantity codes. The codes used to designate the test coupon quantity in table H–I shall be as follows:

1 – Minimum of one test coupon for this verification on each inspection panel.

2 – Minimum of two test coupons for this verification on each inspection panel.

3 – Minimum of three test coupons for this verification on each inspection panel.

4 – Minimum of four test coupons for this verification on each inspection panel.

# – This test coupon is required on the inspection panel only if the performance characteristic represented by the design or construction technique used to fabricate the printed wiring boards is present on the printed wiring boards. The minimum number required needs to be determined by the number of inspection groups needing the test coupon for verification purposes.

H.3.3.2 Test coupon placement codes. The codes used to designate the test coupon placement in table H–I shall be as follows:

ML – The location of the test coupon on the inspection panel is the manufacturer's option.

DC – The location of the test coupon on the inspection panel shall be on opposite corners.

BS – The location of the test coupon on the inspection panel is the manufacturer's option. The test coupon shall be place on each external layer (top and bottom) of the inspection panel.

H.3.3.3 Test coupon inspection group usage codes. The code used to designate the inspection group usage of a test coupon in table H–I shall be as follows:

GA – This code designates that the test coupon is used during group A inspection.

GB – This code designates that the test coupon is used during group B inspection.

GC – This code designates that the test coupon is used during group C inspection.

GD – This code designates that the test coupon is used for process qualification or requalification.

GP – This test coupon is used during in-process inspection.



Source: https://assist.dla.mil -- Downloaded: 2016-11-03T17:14Z
Check the source to verify that this is the current version before use.

TABLE H–I. Test coupons on inspection panels.

| Inspections (associated with the identified test coupon) | | Test coupon identifier | Type 1 | Type 2 | Type 3 | Type 4 | Type 5 | Inspection group |
|---|---|---|---|---|---|---|---|---|
| Plating adhesion | | C | 2–ML | 2–ML | 2–ML | 2–ML | 2–ML | GP and GA |
| | | M | #–ML | #–ML | #–ML | #–ML | #–ML | GP and GA |
| Solder mask | Standard | G | 2–ML | 2–ML | 2–ML | 2–ML | 2–ML | GP and GA |
| | Tented vias | Y | | #–ML | #–ML | #–ML | | GP and GA |
| As received (microsection) | | A | 1–ML | 1–ML | 1–ML | 1–ML | 1–ML | GA |
| Resistance to soldering heat (microsection) | | B | 2–DC | 2–DC | 2–DC | 2–DC | 2–DC | GA |
| Solderability | Through hole 1/ | A | | 4–ML | 4–ML | 4–ML | | GA |
| | Through hole 1/ | S | | 1–ML | 1–ML | 1–ML | | GA |
| | Surface mount | M | #–BS | #–BS | #–BS | #–BS | #–BS | GA |
| Adhesion, legend | | 4/ | 1–ML | 1–ML | 1–ML | 1–ML | 1–ML | GA |
| Resistance to solvents 2/ | | 3/ | 3–ML | 3–ML | 3–ML | 3–ML | 3–ML | GA or GB |
| Rework simulation (through hole) | | A | 1–ML | 1–ML | 1–ML | 1–ML | 1–ML | GB |
| Insulation resistance 5/ | | E | 2–ML | 2–ML | 2–ML | 2–ML | 2–ML | GB |
| Surface peel strength 6/ | | P | | | 2–BS | 2–BS | | GB |
| Folding flexibility | | X | 1–ML | 1–ML | 1–ML | 1–ML | 1–ML | GB or GC |
| Flexibility endurance | | X | 1–ML | 1–ML | 1–ML | 1–ML | 1–ML | GC |
| Thermal shock | | D | #–ML | #–ML | #–ML | #–ML | #–ML | GD |

1/ Either one "S" or four "A" test coupons are needed on the inspection panel for solderability testing. The through–hole solderability test requires that 30 holes be inspected. One "S" coupon has 40 holes and four "A" test coupons will yield a total of 36 holes for the inspection.
2/ Test method number 2.3.4 of IPC-TM-650 designates that three solutions shall be used for testing marking. Either one test specimen can be used for each solution (three total specimens needed) or one test specimen can be subjected to all three solutions.
3/ See H.4.3.6 for test specimen details.
4/ See H.4.3.7 for test specimen details.
5/ See H.4.3.5 for alternate test coupon design.
6/ See A.4.8.4.11 for sampling details.



Source: https://assist.dla.mil -- Downloaded: 2016-11-03T17:14Z
Check the source to verify that this is the current version before use.

H.4 TEST COUPONS AND TEST SPECIMENS

H.4.1 General test coupon requirements. Individual test coupons shall be designed to evaluate specific individual characteristics of the printed wiring boards they represent. Variations in specified test coupon design shall meet the intent of the original design and be representative of the printed wiring board. The test coupons shall reflect the design of the printed wiring boards in regards to the plated–through holes, conductor patterns, spacings, and other characteristics that are to be evaluated on the specific test coupon.

H.4.2 Process control test coupons. When test coupons are used to establish process control parameters, they shall consistently use a single hole size or land configuration which reflects the process used. The process characteristics and general printed wiring board characteristics should be matched (for example, threshold technology or leading edge technology) by the test coupons.

H.4.3 Designs and placement. The following test specimen configurations and designs shall be used to verify printed wiring boards to the requirements of appendix A.

H.4.3.1 Test specimens for the verification of resistance to solvents (see A.4.8.3.2).

H.4.3.1.1 Design of test specimens used for resistance to solvents. The printed wiring board test specimens for the resistance to solvents verification can be either portions or whole production printed wiring boards, quality conformance test circuitry strip identification areas containing ink, or paint marking.

H.4.3.1.2 Panel placement. The printed wiring test specimens shall be placed on the inspection panel where space is available.

H.4.3.2 Test specimens for the verification of flexibility endurance (see A.4.8.4.7). This printed wiring test specimen is used to evaluate the ability of flexible circuits to withstand dynamic flexing forces.

H.4.3.2.1 Designs of test specimens used for flexibility endurance. The design or the printed wiring board test specimens for the flexibility endurance verification shall be one of the following:

a. A suitable portion of a single or double sided production flexible printed wiring board.

b. The test coupon specified in test method number 2.4.3 of IPC-TM-650 (see table H–I).

H.4.3.2.2 Panel placement. The printed wiring board test specimens shall be placed on the inspection panel where space is available.

H.4.3.3 Test specimens for the verification of folding flexibility (see A.4.8.4.8). This printed wiring test specimen is used to evaluate the folding ability of stack up combinations of flexible dielectric materials and metallic foils.

H.4.3.3.1 Designs of test specimens used for folding flexibility. Folding flexibility shall be evaluated using any of the following test specimen designs:

a. A suitable portion of a production multilayer rigid–flex printed wiring board.

b. Test coupon "H–1", "H–2", or "H–3" as defined in IPC-100043 or IPC-100044.

c. Test coupon "X" specified in IPC-2221.

H.4.3.3.2 Panel placement. The printed wiring board test specimens shall be placed on the inspection panel where space is available.



Source: https://assist.dla.mil -- Downloaded: 2016-11-03T17:14Z
Check the source to verify that this is the current version before use.

H.4.3.4 Test coupons for the verification of conductor surface peel strength (see A.4.8.4.11). This printed wiring test specimen is used to evaluate the peel strength of metallic foils as the result of the foil lamination fabrication process.

H.4.3.4.1 Design of test specimens for verification of conductor surface peel strength. The design of this test coupon is shown on figure H–2. The test coupon shall consist of a conductor that provides a minimum test length of 2 inches (50.8 mm) and a minimum conductor width of .125 inch (3.18 mm).

H.4.3.4.2 Panel placement. At least one test coupon "P" for each foil laminated side of the printed wiring board shall be placed on the inspection panel where space is available.

H.4.3.5 Alternate test coupon for the verification of moisture and insulation resistance (see A.4.8.6.1). Alternate design test coupon "E" is used to evaluate the moisture and insulation resistance of laminated base materials.

H.4.3.5.1 Design of alternate test coupon ‘E’. The design of this alternate test coupon is shown on figure H–3. This test coupon can be used in lieu of the test coupon "E" specified in IPC–2221.

H.4.3.5.2 Panel placement. At least two alternate test coupons "E" shall be placed on the inspection panel where space is available.

H.4.3.6 Test coupons for the verification of coverlayer adhesion (see A.4.8.4.1).

H.4.3.6.1 Design of test specimen for coverlayer adhesion. The test specimens can be either a production printed wiring boards or a portion of a production printed wiring board.

H.4.3.6.2 Panel placement. The placement of the test specimen on the inspection panel shall be where space is available.

H.4.3.7 Test coupons for the verification of adhesion, legend and marking (see A.4.8.4.2).

H.4.3.7.1 Design of test specimen for legend and marking adhesion. The test specimens can be either a production printed wiring boards, a portion of a production printed wiring board, or a quality conformance test circuitry strip identification areas containing ink or paint marking.

H.4.3.7.2 Panel placement. The placement of the test specimen on the inspection panel shall be where space is available.



Source: https://assist.dla.mil -- Downloaded: 2016-11-03T17:14Z
Check the source to verify that this is the current version before use.

H.4.3.8 Alternate test coupon for the verification of registration (see A.3.7.2.2.2 and A.4.8.2.2.2).

H.4.3.8.1 Design of alternate registration test coupon. There are at least two test coupon designs for evaluating registration using non-destructive methods. The designs are as follows:

a. Test coupon "F" (etch factor not needed) as specified in IPC–2221.

b. Test coupon "R" (etch factor of each layer needed) as specified in IPC–2221.

If other registration test coupon designs and requirements are provided as an element of the design documentation set, registration can be evaluated in accordance with the criteria specified on the applicable master drawing.

H.4.3.8.2 Panel placement. When using non-destructive registration in lieu of destructive evaluation of registration, at least one non-destructive registration test coupons shall be placed on the inspection panel where space is available.

H.5 NOTES

H.5.1 Discussion. Test coupons used for verification inspections and testing, when required, shall be in accordance with this appendix. Quality assurance provisions often require the use of specific test procedures or evaluations to determine if a particular design of a printed wiring board meets the requirements of the design activity and the specification. Some of the verification inspections are performed visually and are non-destructive, while others are only capable through destructive testing and destructive evaluations. Some quality evaluations are performed on test coupons because the test is destructive or the nature of the test requires a specific structure or configuration which may not exist on the printed wiring board.

Test coupons are used in these types of inspections as representatives of the printed wiring boards fabricated on the same panel. In many cases, a test coupon is a suitable printed wiring board test specimen for physical destructive analysis, or testing, since it has been subjected to the same manufacturing processes as the printed wiring boards on the panel. However, the design of the test coupons and their location on a panel are critical in order to ensure that the test coupons are truly representative of the printed wiring boards they represent. A production printed wiring board may be used for destructive tests. Tests requiring specific conductor pattern configuration (for example, insulation resistance) may also be performed on production printed wiring boards if appropriate conductor patterns are included in the design of the printed wiring board.



Source: https://assist.dla.mil -- Downloaded: 2016-11-03T17:14Z
Check the source to verify that this is the current version before use.

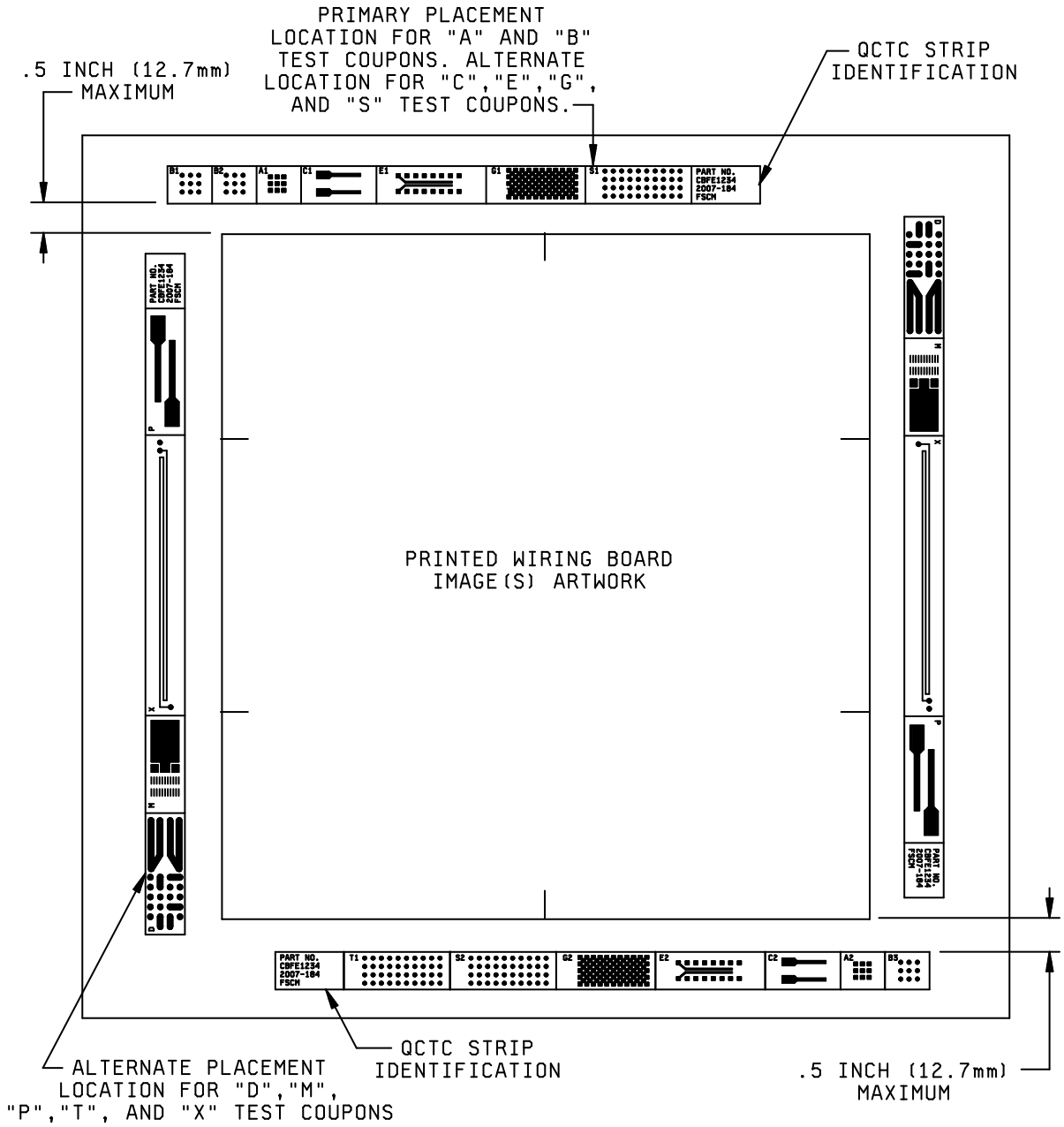


FIGURE H–1. Panel location of quality control test circuitry.



Source: https://assist.dla.mil -- Downloaded: 2016-11-03T17:14Z
Check the source to verify that this is the current version before use.

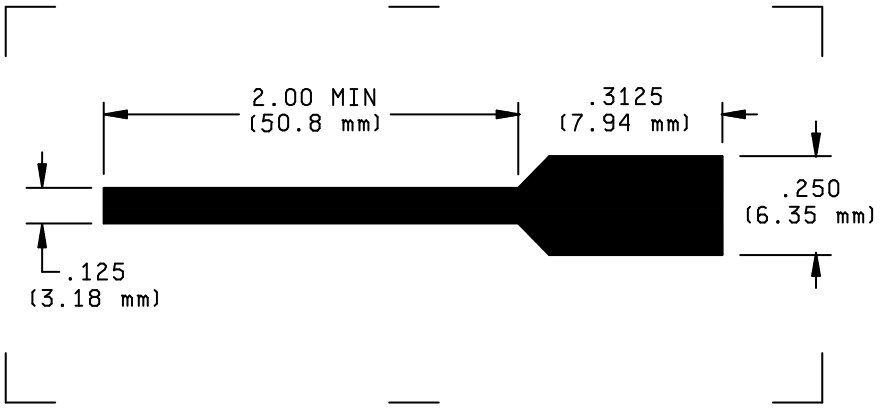


NOTES:

1. Dimensions are in inches. Millimeters are given for information only.
2. Unless otherwise specified, tolerances are for ±.02 inch (0.51 mm) for two place decimals and ±.010 inch (0.25 mm) for three place decimals.

FIGURE H–2. Test coupon P.

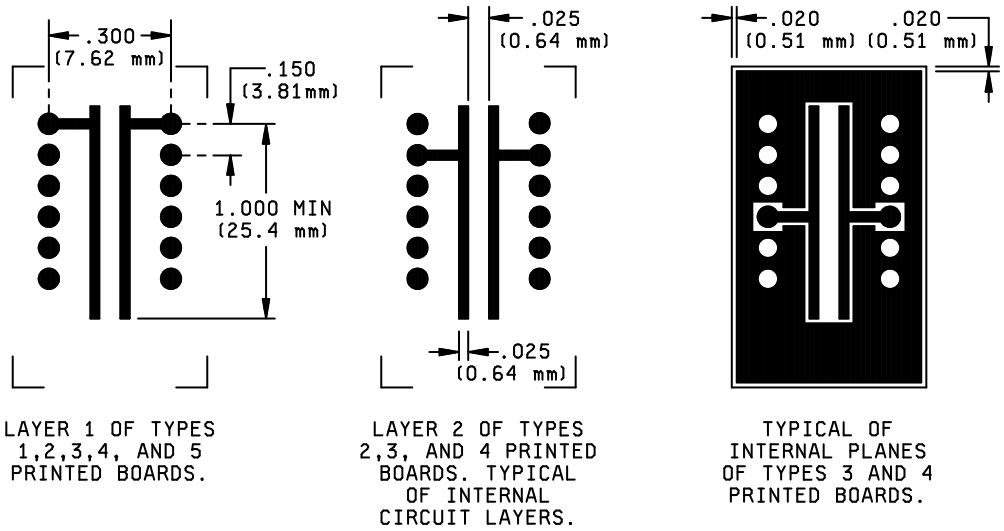


NOTES:

1. Dimensions are in inches. Millimeters are given for information only.
2. Unless otherwise specified, tolerances are for ±.02 inch (0.51 mm) for two place decimals and ±.010 inch (0.25 mm) for three place decimals.

FIGURE H–3. Alternate design for test coupon E.



Source: https://assist.dla.mil -- Downloaded: 2016-11-03T17:14Z
Check the source to verify that this is the current version before use.

This page intentionally left blank.



Source: https://assist.dla.mil -- Downloaded: 2016-11-03T17:14Z
Check the source to verify that this is the current version before use.

Custodians:
Army – CR
Navy – EC
Air Force – 85
DLA – CC

Review activities:
Army – AR, MI
Navy – AS, MC, OS, SH, TD
Air Force – 16, 99

Preparing activity:
DLA – CC

(Project 5998–2007–032)

NOTE: The activities listed above were interested in this document as of the date of this document. Since organizations and responsibilities can change, you should verify the currency of the information above using the ASSIST Online database at http://assist.daps.dla.mil.



Source: https://assist.dla.mil -- Downloaded: 2016-11-03T17:14Z
Check the source to verify that this is the current version before use.