MILITARY SPECIFICATION

SEMICONDUCTOR DEVICE, FIELD-EFFECT TRANSISTOR, N-CHANNEL, SILICON TYPES 2N4856 THROUGH 2N4861 JAN, JANTX, JANTXV, AND JANS

This specification is approved for use by all Departments and Agencies of the Department of Defense.

1. SCOPE

1.1 Scope. This specification covers the detail requirements for N-channel, depletion-mode, silicon J-FET transistors for use in chopper and analog gate circuit applications. Four levels of product assurance are provided for each device type as specified in MIL-S-19500.

1.2 Physical dimensions. See figure 1 (TO-18).

1.3 Maximum ratings.

P_T 1/ T_A = 25°C	P_T 4/ T_C = 25°C	V_{GS}		V_{DS}		V_{DG}		I_G	T_{STG} 2/ and T_J 3/
		2N4856 2N4857 2N4858	2N4859 2N4860 2N4861	2N4856 2N4857 2N4858	2N4859 2N4860 2N4861	2N4856 2N4857 2N4858	2N4859 2N4860 2N4861		
W	W	V dc	V dc	V dc	V dc	V dc	V dc	mA dc	°C
0.36	1.8	-40	-30	40	30	40	30	50	-65 to +200

1/ Derate lineraly 2.06 mW/°C for T_A = > 25°C.

2/ T_{STG} = Storage temperature.

3/ T_J = Operating junction temperature.

4/ Derate linerly 10.3 mW/°C for T_C = > 25°C.

Beneficial comments (recommendations, additions, deletions) and any pertinent data which may be of use in improving this document should be addressed to: Rome Air Development Center (RBE-2) Griffiss AFB, NY 13441, by using the self-addressed Standardization Document Improvement Proposal (DD Form 1426 appearing at the end of this document or by letter.

FSC 5961

Source: https://assist.dla.mil -- Downloaded: 2016-12-04T06:31Z
Check the source to verify that this is the current version before use.

1.4 Primary electrical characteristics.

	I_{DSS} 1/			$V_{DS(on)}$			$V_{GS(off)}$			$r_{ds(on)}$			$R_{\theta JA}$	$R_{\theta JC}$
	V_{DS} = 15 V dc, V_{GS} = 0			I_D = 20 mA dc, V_{GS} = 0	I_D = 10 mA dc, V_{GS} = 0	I_D = 5 mA dc, V_{GS} = 0	V_{DS} = 15 V dc, I_D = 0.5 nA dc			V_{GS} = 0; I_D = 0, f = 1 kHz, I_d = 100 µA ac(rms)				
	2N4856 2N4859	2N4857 2N4860	2N4858 2N4861	2N4856 2N4859	2N4857 2N4860	2N4858 2N4861	2N4856 2N4859	2N4857 2N4860	2N4858 2N4861	2N4856 2N4859	2N4857 2N4860	2N4858 2N4861		
	mA dc	mA dc	mA dc	V dc	V dc	V dc	V dc	V dc	V dc	Ohm	Ohm	Ohm	°C/mW	°C/mW
Min	50	20	8	---	---	---	-4	-2	-0.8	---	---	---	.486	.097
Max	175	100	80	0.75	0.50	0.50	-10	-6	-4	25	40	60		

1/ Pulsed (see 4.5.1)

Source: https://assist.dla.mil -- Downloaded: 2016-12-04T06:31Z
Check the source to verify that this is the current version before use.

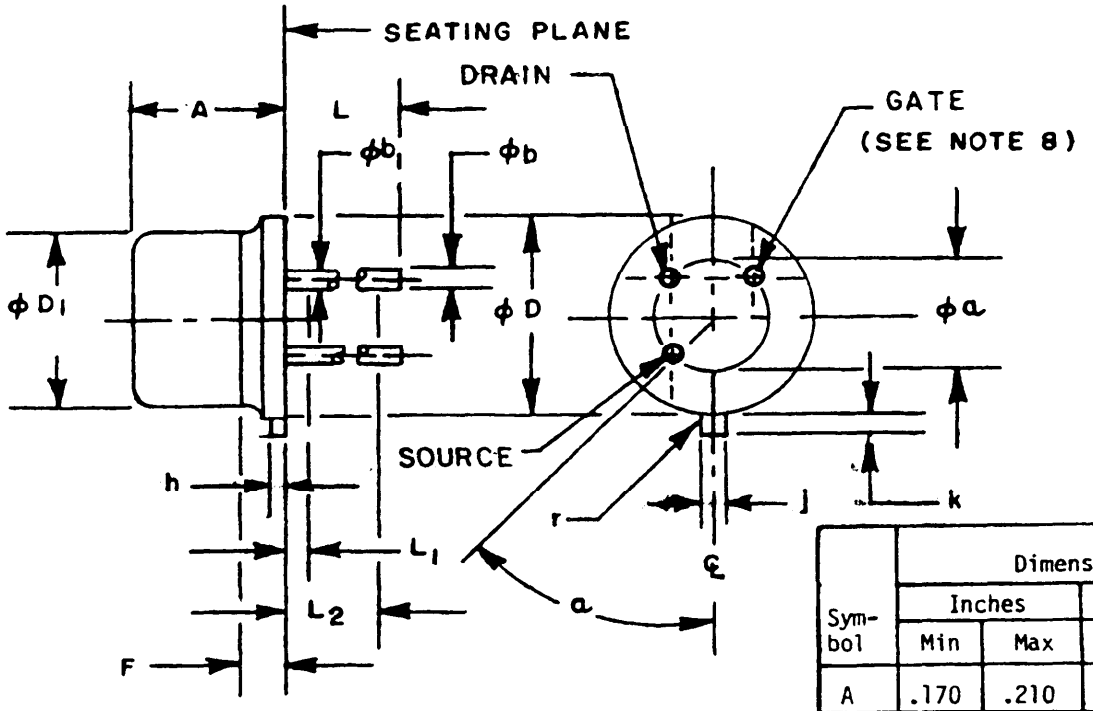

Symbol	Dimensions				Notes
	Inches		Millimeters		
	Min	Max	Min	Max	
A	.170	.210	4.32	5.33	
Øa	.100 TP		2.54 TP		5
Øb	.016	.021	0.41	0.53	6,7
$Øb_1$	.016	.019	0.41	0.48	6,7
ØD	.209	.230	5.31	5.84	
$ØD_1$	.178	.195	4.52	4.95	
F	- - -	.030	- - -	0.76	4
h	.009	.041	0.23	1.04	
j	.036	.046	0.91	1.17	2
k	.028	.048	0.71	1.22	2,3
L	.500	.750	12.70	19.05	6,7
L_1	- - -	.050	- - -	1.27	6,7
L_2	.250	- - -	6.35	- - -	6,7
r	- - -	.010	- - -	0.25	9
	45° TP		45° TP		5

NOTES:
1. Metric equivalents are given for general information only.
2. Beyond 4 (radius) maximum, j shall be held for a minimum length of .011 (0.28 mm).
3. k measured from maximum ØD.
4. Body contour optional within zone defined by $ØD_1$ and F.
5. Leads at gauge plane .054 +.001 -.000 (1.37 +0.03 -0.00 mm) below seating plane shall be within .007 (0.18 mm) radius of true position (TP) at maximum material condition (MMC) relative to tab at MMC. The device may be measured by direct methods or by the gauge and gauging procedure shown on figure 2.
6. $Øb_1$ applies between L_1 and L_2. Øb applies between L_2 and L minimum. Diameter is uncontrolled in L_1 and beyond L minimum.
7. All three leads.
8. The gate shall be internally connected to the case.
9. r (radius) applies to both inside corners of tab.

FIGURE 1. Physical dimensions.

Source: https://assist.dla.mil -- Downloaded: 2016-12-04T06:31Z
Check the source to verify that this is the current version before use.

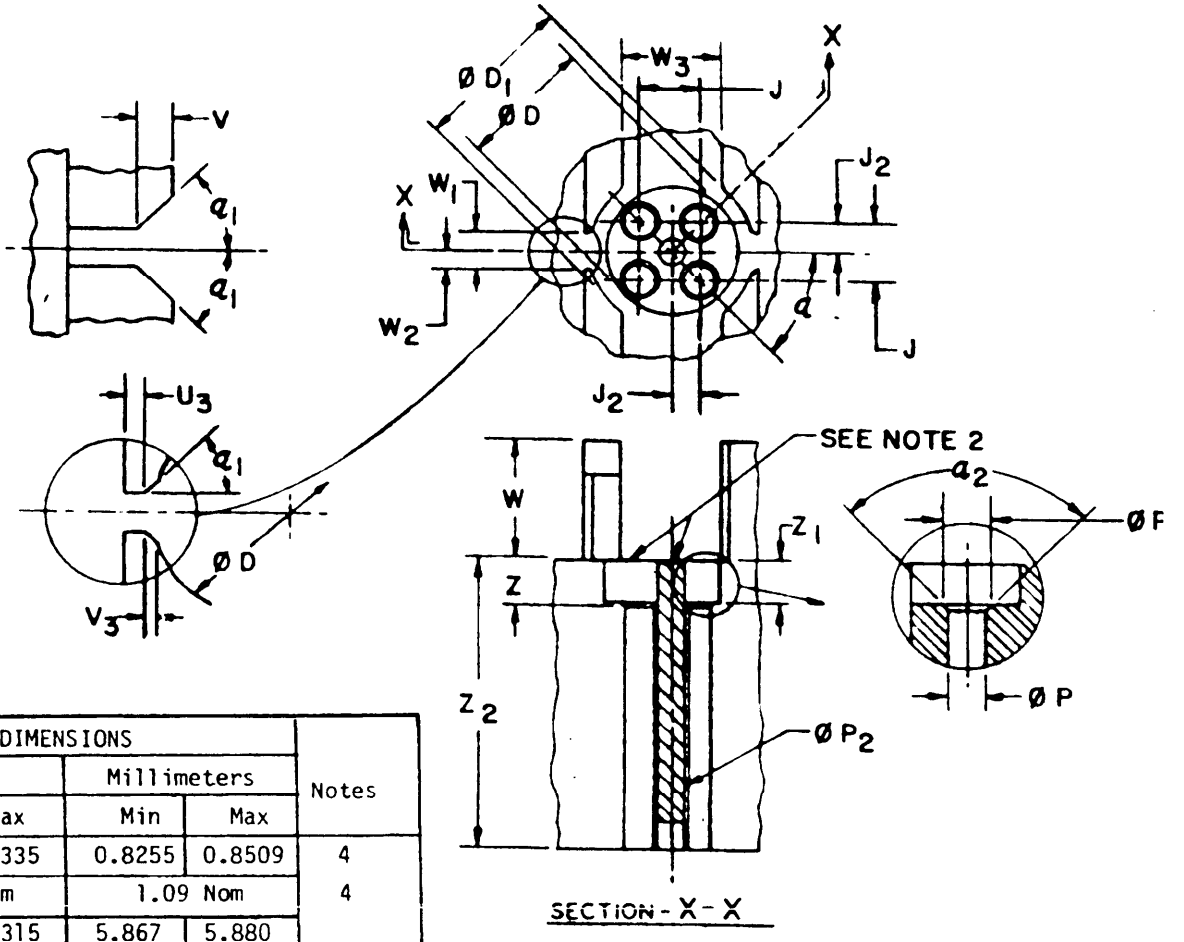

Ltr.	DIMENSIONS				Notes
	Inches		Millimeters		
	Min	Max	Min	Max	
ØB	.0325	.0335	0.8255	0.8509	4
$ØB_1$	.043 Nom		1.09 Nom		4
ØD	.2310	.2315	5.867	5.880	
$ØD_1$	.159	.181	4.04	4.09	
$ØD_2$	.040 Nom		1.02 Nom		5
E	.0995	.1005	2.527	2.553	
E_1	.0495	.0505	1.257	1.283	
H	.145	.155	3.88	3.94	
J	.0470	.0475	1.194	1.207	
J_1	.0235	.0245	0.597	0.622	
K	.009	.011	0.229	0.279	
K_1	.005 Nom		0.127 Nom		
L	.372	.378	9.45	9.60	
L_1	.054	.055	1.37	1.40	
L_2	.043 Nom		1.09 Nom		
Q	.040 Nom		1.02 Nom		
Q_1	.123	.127	3.12	3.23	
A	44,90°	45.10°	- - -	- - -	
B	45° Nom		- - -		
Y	90° Nom		- - -		

FIGURE 2. Gauge for lead and tab location for transistor types 2N4856 through 2N4861.

Source: https://assist.dla.mil -- Downloaded: 2016-12-04T06:31Z
Check the source to verify that this is the current version before use.

NOTES:

1. Metric equivalents are given for general information only.
2. The following gaging procedure shall be used: The device being measured shall be inserted until its seating plane is .125 (3.18 mm) +.010 (0.25 mm) from the seating surface of the gage. A force of 8 ±.5 oz. shall then be applied parallel and symmetrical to the device's cylindrical axis. When examined visually after the force application (the force need not be removed) the seating plane of the device shall be seated against the gage. The use of a pin straightener prior to insertion in the gage is permissible. A spacer may be used to obtain the .125 (3.18 mm) distance from the gage seat prior to force application.
3. These surfaces to be parallel and in same plane within ±.001 (0.03 mm).
4. Four holes.
5. Pressed in.

FIGURE 2. Gage for lead and tab location for transistor types 2N4856 through 2N4861-Continued.

Source: https://assist.dla.mil -- Downloaded: 2016-12-04T06:31Z
Check the source to verify that this is the current version before use.

2. APPLICABLE DOCUMENTS

2.1 Government specifications and standards. Unless otherwise specified, the following specifications and standards, of the issue listed in that issue of the Department of Defense Index of Specifications and Standards specified in the solicitation, form a part of this specification to the extent specified herein.

SPECIFICATION

MILITARY

MIL-S-19500 - Semiconductor Devices, General Specification for.

STANDARD

MILITARY

MIL-STD-750 - Test Methods for Semiconductor Devices.

(Copies of specifications, standards, drawings, and publications required by manufacturers in connection with specific acquisition functions should be obtained from the contracting activity or as directed by the contracting officer.)

2.2 Order of precedence. In the event of a conflict between the text of this specification and the references cited herein, the text of this specification shall take precedence.

3. REQUIREMENTS

3.1 Detail specification. The individual item requirements shall be in accordance with MIL-S-19500, and as specified herein.

3.2 Abbreviations, symbols, and definitions. Abbreviations, symbols, and definitions used herein shall be as specified in MIL-S-19500.

3.3 Design, construction, and physical dimensions. The design, construction, and physical dimensions shall be as specified in MIL-S-19500, and figures 1 and 2 herein.

3.3.1 Lead material and finish. Lead material shall be Kovar, Alloy 52, or steel with copper core. Lead finish shall be gold or tin plated, or solder dipped. Where a choice of lead material or finish is desired, it shall be specified in the contract or purchase order (see 6.2).

3.3.2 Internal construction. Multiple chip construction shall not be permitted.

3.4 Marking. Marking shall be in accordance with MIL-S-19500. At the option of the manufacturer, the following marking may be omitted from the body of the transistor:

a. Country of origin.

b. Manufacturer's identification.

4. QUALITY ASSURANCE PROVISIONS

4.1 Sampling and inspection. Sampling and inspection shall be in accordance with MIL-S-19500, and as specified herein.

4.2 Qualification inspection. Qualification inspection shall be in accordance with MIL-S-19500.

4.3 Screening (JANS, JANTX, and JANTXV levels only). Screening shall be in accordance with MIL-S-19500 (table II), as specified herein. The following measurements shall be made in accordance with table I herein. Devices that exceed the limits of table I herein shall not be acceptable.

Source: https://assist.dla.mil -- Downloaded: 2016-12-04T06:31Z
Check the source to verify that this is the current version before use.

Screen (see table II of MIL-STD-19500)	Measurement	
	JANS level	JANTX and JANTXV levels
9	$I_{D(off)1}$ and $r_{ds(on)}$, I_{GSS1}, I_{DSS}	Not applicable
11	ΔI_{GSS1} = ±0.1 nA or ±100% of initial value, whichever is greater; $I_{D(off)1}$, I_{DSS}; $\Delta r_{ds(on)}$ = ±20%; ΔI_{DSS} = ±15%	$I_{D(off)1}$ and $r_{ds(on)}$ I_{GSS1}, I_{DSS}
12	See 4.3.1	See 4.3.1
13	ΔI_{GSS1} = ±0.1 nA or ±100% of initial value, whichever is greater; subgroups 2 and 3 of table I herein; $I_{D(off)1}$ and $\Delta r_{ds(on)}$ = ±20%; ΔI_{DSS} = ±15%	ΔI_{GSS1} = 0.1n A or ±100% of initial value, whichever is greater; subgroup 2 of table I herein; $\Delta r_{ds(on)}$ and $I_{D(off)1}$ = ±20%; ΔI_{DSS} = ±15%

1/ Devices that do not pass group A limits shall not be acceptable.

4.3.1 Power burn-in conditions. Power burn-in conditions are as follows:

T_A = 150°C; 2N4856, 2N4857, 2N4858 V_{GS} = -32 V dc; V_{DS} = 0

2N4859, 2N4860, 2N4861 V_{GS} = -24 V dc; V_{DS} = 0

4.4 Quality conformance inspection. Quality conformance inspection shall be in accordance with MIL-S-19500.

4.4.1 Group A inspection. Group A inspection shall be conducted in accordance with MIL-S-19500, and table I herein. (End-point electrical measurements shall be in accordance with the applicable steps of table IV herein.)

4.4.2 Group B inspection. Group B inspection shall be conducted in accordance with conditions specified for subgroup testing in table IVa (JANS) and table IVb (JAN, JANTX, and JANTXV) of MIL-S-19500, and tables IIa and IIb herein. Electrical measurements (end-points) and delta requirements shall be in accordance with the applicable steps of table IV herein.

4.4.3 Group C inspection. Group C inspection shall be conducted in accordance with the conditior specified for subgroup testing in table V of MIL-S-19500, and table II herein. Electrical measurements (end-points) and delta requirements shall be in accordance with the applicable steps of table IV herein.

4.5 Methods of inspection. Methods of inspection shall be as specified in the appropriate tables and as follows:

4.5.1 Pulse measurements. Conditions for pulse measurement shall be as specified in section 4 of MIL-STD-750.

5. PACKAGING

5.1 Packaging requirements. The requirements for packaging shall be in accordance with MIL-S-19

Source: https://assist.dla.mil -- Downloaded: 2016-12-04T06:31Z
Check the source to verify that this is the current version before use.

6. NOTES

6.1 Notes. The notes specified in MIL-S-19500 are applicable to this specification.

6.2 Ordering data. Acquisition documents may specify the lead material and finish (see 3.3.1).

6.3 Changes from previous issue. Asterisks are not used in this revision to identify changes with respect to the previous issue due to the extensiveness of the changes.

Custodians:
Army - ER
Navy - EC
Air Force - 17
NASA - EG02

Review activities:
Navy - TD
DLA - ES

Agent:
DLA - ES

Preparing activity:
Air Force - 17

(Project 5961-0950)

Source: https://assist.dla.mil -- Downloaded: 2016-12-04T06:31Z
Check the source to verify that this is the current version before use.

TABLE I. Group A inspection.

Inspection	MIL-STD-750 Method	MIL-STD-750 Conditions	LTPD 1/ JANS	LTPD 1/ JAN JANTX JANTXV	Symbol	Limits Min	Limits Max	Unit
Subgroup 1								
Visual and mechancial inspection	2071							
Subgroup 2								
Breakdown voltage, gate to source	3401	Bias condition C; I_G = -1 μA dc; V_{DS} = 0			$V_{(BR)GSS}$			
2N4856, 2N4857, 2N4858						-40		V dc
2N4859, 2N4860, 2N4861						-30		V dc
Gate reverse current	3411	Bias condition C			I_{GSS1}			
2N4856, 2N4857, 2N4858		V_{GS} = -20 V dc; V_{DS} = 0				---	-0.25	nA dc
2N4859, 2N4860, 2N4861		V_{GS} = -15 V dc; V_{DS} = 0				---	-0.25	nA dc
Drain current cutoff	3413	Bias condition A; V_{DS} = 15 V dc; V_{GS} = -10 V dc			$I_{D(off)1}$	---	0.25	nA dc
Drain current zero-gate voltage	3413	Bias condition C; V_{DS} = 15 V dc; V_{GS} = 0; pulsed (see 4.5.1)			I_{DSS}			
2N4856, 2N4859						50	175	mA dc
2N4857, 2N4860						20	100	mA dc
2N4858, 2N4861						8	80	mA dc
Drain-to-source "ON"-state voltage	3405	Bias condition B			$V_{DS(on)}$			
2N4856, 2N4859		I_D = 20 mA dc, V_{GS} = 0				---	0.75	V dc
2N4857, 2N4860		I_D = 10 mA dc, V_{GS} = 0				---	0.50	V dc
2N4858, 2N4861		I_D = 5 mA dc, V_{GS} = 0				---	0.50	V dc
Gate-to-source voltage	3403	V_{DS} = 15 V dc; I_D = 0.5 nA dc			$V_{GS(off)}$			
2N4856, 2N4859						-4	-10	V dc
2N4857, 2N4860						-2	-6	V dc
2N4858, 2N4861						-0.8	-4	V dc
Small-signal drain-to-source "ON" resistance	3423	Bias condition B; V_{GS} = 0; I_D = 0; f = 1 kHz; I_d = 100 μA ac(rms)			$r_{ds(on)}$			
2N4856, 2N4859						---	25	Ohms
2N4857, 2N4860						---	40	Ohms
2N4858, 2N4861						---	60	Ohms
- - -								

See footnote at end of table.

Source: https://assist.dla.mil -- Downloaded: 2016-12-04T06:31Z
Check the source to verify that this is the current version before use.

TABLE I. Group A inspection - Continued.

Inspection	MIL-STD-750 Method	MIL-STD-750 Conditions	LTPD 1/ JANS	LTPD 1/ JAN JANTX JANTXV	Symbol	Limits Min	Limits Max	
Subgroup 3								
High-temperature operation:		T_A = 150°C						
Gate reverse current	3411	Bias condition C			I_{GSS2}			
2N4856, 2N4857, 2N4858		V_{GS} = -20 V dc; V_{DS} = 0				---	-0.5	µ
2N4859, 2N4860, 2N4861		V_{GS} = -15 V dc; V_{DS} = 0				---	-0.5	µ
Drain current cutoff	3413	Bias condition A; V_{DS} = 15 V dc; V_{GS} = -10 V dc			$I_{D(off)2}$	---	0.5	µ
Subgroup 4								
Turn-on delay time	3459	See figure 3.			$t_{d(on)}$			
2N4856, 2N4859						---	6	
2N4857, 2N4860						---	6	
2N4858, 2N4861						---	10	
Rise time	3459	See figure 3.			t_r			
2N4856, 2N4859						---	3	
2N4857, 2N4860						---	4	
2N4858, 2N4861						---	10	
Turn-off time	3459	See figure 3.			t_{off}			
2N4856, 2N4859						---	25	
2N4857, 2N4860						---	50	
2N4858, 2N4861						---	100	
Small-signal common-source short-circuit input capacitance	3431	V_{DS} = 0; V_{GS} = -10 V dc; f = 1 MHz; C_1 = .1 µF, C_2 = 20.1 µF; L_1 = L_2 ≥ 500 µH			C_{iss}	---	18	
Small-signal common-source short-circuit reverse transfer capacitance	3433	V_{DS} = 0; V_{GS} = -10 V dc; f = 1 MHz; C_1 = .1 µF, L_1 = L_2 ≥ 500 µH			C_{rss}	---	8	
Subgroups 5, 6, and 7								
Not applicable								

1/ For LTPD number see MIL-S-19500.

Source: https://assist.dla.mil -- Downloaded: 2016-12-04T06:31Z
Check the source to verify that this is the current version before use.

TABLE IIa. Group B inspection for JANS devices.

Inspection	MIL-STD-750 Method	MIL-STD-750 Conditions	Qualification and large lot lot quality conformance inspection LTPD 1/	Small lot quality conformance inspection n/c 1/
Subgroup 1				
Physical dimensions	2066	See figure 1.		
Subgroup 2				
Solderability	2026			
Resistance to solvents	1022			
Subgroup 3				
Thermal shock (temperature cycling)	1051			
Hermetic seal	1071			
a. Fine				
b. Gross				
Electrical measurements		See table IV, steps 1, 2, 3, 4, and 5.		
Decap internal viusal (design verification)	2075			
Bond strength (wire or clip bonded devices only)	2037			
Die shear	2017			
Subgroup 4				
Intermittent operation life	1037	P_T = 360 mW at T_A = 25 ±3°C, t_{off} = t_{on} = 3 minutes minimum for 2,000 cycles. No heat sink or forced air cooling shall be permitted.		
Electrical measurments		See table IV, steps 1, 2, 3, 4, 5, and 9.		
Subgroup 5				
Accelerated steady-state operation life	1027	96 hours; V_{DS} = 15 V dc, I_D = 24 mA at T_A = 100°C; or adjust as required by the chosen T_A to give an average lot T_J = 275°C. Marking legibility requirements shall not apply.		
Electrical measurements		See table IV, steps 1, 2, 3, 4, 5, 10, and 11.		
- - -				

See footnote at end of table.

Source: https://assist.dla.mil -- Downloaded: 2016-12-04T06:31Z
Check the source to verify that this is the current version before use.

TABLE IIa. Group B inspection for JANS devices - Continued.

Inspection	MIL-STD-750		Qualification and large lot lot quality conformance inspection LTPD 1/	Small lot quali confor e inspection n/c 1/
	Method	Conditions		
Subgroup 5 (Continued)				
Bond strength (Al-Au die interconnect only)	2037			
Subgroup 6				
Thermal resistance	3151	T_1 = 25°C, T_2 = 125°C $R_{\theta JC} \leq$ 97°C/W		

1/ For LTPD number see MIL-S-19500.

Source: https://assist.dla.mil -- Downloaded: 2016-12-04T06:31Z
Check the source to verify that this is the current version before use.

TABLE IIb. Group B inspection for JAN, JANTX, and JANTXV.

Inspection	MIL-STD-750 Method	MIL-STD-750 Conditions	LTPD 1/
Subgroup 1			
Solderability	2026		
Resistance to solvents	1022		
Subgroup 2			
Thermal shock (temperature cycling)	1051		
Hermetic seal	1071		
a. Fine leak			
b. Gross leak			
Electrical measurements		See table IV, steps 4 and 6	
Subgroup 3			
Steady-state operations life (LTPD)	1027	T_A = 175°C, V_{DS} = 0 V	
2N4856, 2N4857, 2N4858 2N4859, 2N4860, 2N4861		V_{GS} = -32 V dc V_{GS} = -24 V dc	
Electrical measurements		See table IV, steps 7 and 8	
Subgroup 4			
Decap internal visual design verification	2075	See 3.3.2	
Bond strength (wire or clip bonded devices only)	2037	Test condition A, all internal bond wires for each device shall be pulled separately.	
Subgroup 5			
Not applicable			
Subgroup 6			
High-temperature (nonoperating) life (LTPD)	1032	T_A = +200°C	
Electrical measurements		See table IV, steps 7 and 8	

1/ For LTPD number see MIL-S-19500.

Source: https://assist.dla.mil -- Downloaded: 2016-12-04T06:31Z
Check the source to verify that this is the current version before use.

TABLE III. Group C inspection.

Inspection	MIL-STD-750 Method	MIL-STD-750 Conditions	LTPD 1/
Subgroup 1			
Physical dimensions	2066	See figure 1.	
Subgroup 2			
Thermal shock (glass strain)	1056	Test condition A.	
Terminal strength (lead fatigue)	2036	Test condition E.	
Hermetic seal	1071		
a. Fine leak			
b. Gross leak			
Moisture resistance	1021		
External visual	2071		
Electrical measurements		See table IV, steps 1, 2, 3, 4, and 5 (JANS) and steps 4 and 6 (JAN, JANTX, JANTXV)	
Subgroup 3			
Shock	2016		
Vibration variable frequency	2056		
Constant acceleration	2006		
Electrical measurements		See table IV, steps 1, 2, 3, 4, and 5 (JANS) and steps 4 and 6 (JAN, JANTX, JANTXV)	
Subgroup 4			
Salt atmosphere (corrosion)	1041		
Subgroup 5			
Not applicable			
Subgroup 6			
Steady-state operation life	1026	T_A = 175°C, V_{DS} = 0 V	
2N4856, 2N4857, 2N4858		V_{GS} = -32 V dc	
2N4859, 2N4860, 2N4861		V_{GS} = -24 V dc	
Electrical measurements		See table IV, steps 1, 2, 3, 4, 5, 10, and 11 (JANS) and steps 7 and 8 (JAN, JANTX, JANTXV)	
Subgroup 7			
Thermal resistance	3151	For JAN, JANTX, and JANTXV only T_1 = 25°C, T_2 = 125°C $R_{\theta JC} \leq 97$°C/W	

1/ For LTPD numbers see MIL-S-19500.

Source: https://assist.dla.mil -- Downloaded: 2016-12-04T06:31Z
Check the source to verify that this is the current version before use.

TABLE IV. Group B and C electrical measurements.

Step	Inspection	MIL-STD-750 Method	MIL-STD-750 Conditions	Symbol	Limits Min	Limits Max	Unit
1.	Reverse gate current	3411	Bias condition C;	I_{GSS1}			
	2N4856, 2N4857, 2N4858,		V_{GS} = -20 V dc,		---	-0.25	nA dc
	2N4859, 2N4860, 2N4861		V_{GS} = -15 V dc		---	-0.25	nA dc
2.	Zero-gate-voltage drain current	3413	Bias condition C; V_{DS} = 15 V dc, V_{GS} = 0, pulsed (see 4.5.1)	I_{DSS}			
	2N4856, 2N4857				50	120	mA dc
	2N4858, 2N4859				20	100	mA dc
	2N4860, 2N4861				8	80	mA dc
3.	Gate-to-source breakdown voltage	3401	Bias condition C; I_G = -1 μA dc, V_{DS} = 0	$V_{(BR)GSS}$			
	2N4856, 2N4857, 2N4858,				-40	---	V dc
	2N4859, 2N4860, 2N4861				-30	---	V dc
4.	Small-signal drain to source "ON"-state resistance	3423	Bias condition B; I_d = 100 μA ac(rms), f = 1 kHz, V_{GS} = 0; I_D = 0	$r_{ds(on)}$			
	2N4856, 2N4857				---	25	ohms
	2N4858, 2N4859				---	40	ohms
	2N4860, 2N4861				---	60	ohms
5.	Drain cutoff current	3413	Bias condition A; V_{DS} = 15 V dc, V_{GS} = -10 V dc	$I_{D(off)1}$	---	0.25	nA dc
6.	Drain cutoff current	3413	Bias condition A; V_{DS} = 15 V dc, V_{GS} = -10 V dc	$I_{D(off)1}$	---	1.0	nA dc
7.	Drain cutoff current	3413	Bias condition A; V_{DS} = 15 V dc, V_{GS} = -10 V dc	$I_{D(off)1}$	---	2.5	nA dc
8.	Small signal drain to source "ON"-state resistance	3423	V_{GS} = 0; I_D = 0; f = 1 kHz, I_d = 100 μA ac(rms) Bias condition B	$r_{ds(on)}$			
	2N4856, 2N4857				---	30	ohms
	2N4858, 2N4859				---	48	ohms
	2N4860, 2N4861				---	72	ohms
9.	"ON"-state drain to source voltage	3405	Bias condition B;	$\Delta V_{DS(on)}$ 1/	±50 mV from previous measured value.		
	2N4856, 2N4857		I_D = 20 mA dc				
	2N4858, 2N4859		I_D = 10 mA dc				
	2N4860, 2N4861		I_D = 5 mA dc				
- - -							

1/ See footnote at end of table.

Source: https://assist.dla.mil -- Downloaded: 2016-12-04T06:31Z
Check the source to verify that this is the current version before use.

TABLE IV. Group B and C electrical measurements - Continued.

Step	Inspection	MIL-STD-750 Method	MIL-STD-750 Conditions	Symbol	Limits Min	Limits Max	Units
10.	Small-signal drain	3423	Bias condition B; f = 1 kHz I_D = 100 μA (rms)	$\Delta r_{ds(on)}$ 1/	±25% from initial value.		
11.	Zero-gate-voltage drain current	3413	Bias condition C; V_{DS} = 15 V dc, V_{GS} = 0, pulsed (see 4.5.1)	ΔI_{DSS} 1/	±15% from initial value.		

1/ Devices which exceed the group A limits for this test shall be rejected.

Source: https://assist.dla.mil -- Downloaded: 2016-12-04T06:31Z
Check the source to verify that this is the current version before use.

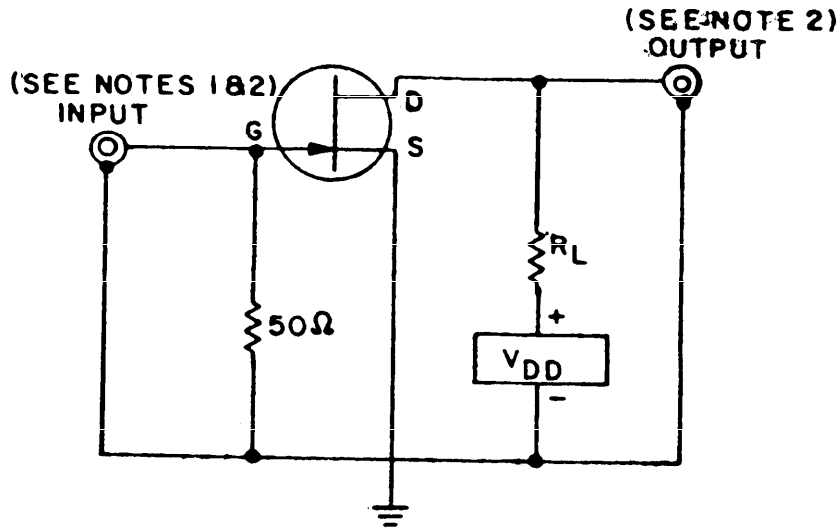

TEST CIRCUIT

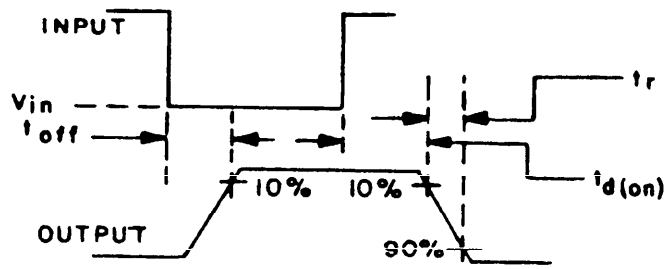

VOLTAGE WAVEFORMS

TEST CONDITIONS AND COMPONENT VALUE						
TYPE	V_{DD}	$V_{GS(on)}$	$V_{GS(off)}$	R_L	V_{IN}	$I_{D(on)}$ 1/
	V dc	V dc	V dc	Ω	V dc	mA dc
2N4856, 2N4859	10	0	-10	464	-10	20
2N4857, 2N4870	10	0	-6	953	-6	10
2N4858, 2N4861	10	0	-4	1,910	-4	5

1/ Nominal value; exact value varies slightly with transistor parameters.

NOTES:

1. The input waveform has the following characteristics: t_p = 200 ns; $t_r \leq 1$ ns; duty cycle ≈ 2%. It is supplied by a generator with Z_{out} = 50Ω.
2. Waveforms are monitored on an oscilloscope with the following characteristics: $t_r \leq 0.75$ ns; $R_{IN} \geq 1$ MΩ; $C_{IN} \leq 2.5$ pF.

FIGURE 3. Switching time test circuit and waveforms.

Source: https://assist.dla.mil -- Downloaded: 2016-12-04T06:31Z
Check the source to verify that this is the current version before use.

INSTRUCTIONS: In a continuing effort to make our standardization documents better, the DoD provides this form for u submitting comments and suggestions for improvements. All users of military standardization documents are invited to pro suggestions. This form may be detached, folded along the lines indicated, taped along the loose edge *(DO NOT STAPLE)*, mailed. In block 5, be as specific as possible about particular problem areas such as wording which required interpretation too rigid, restrictive, loose, ambiguous, or was incompatible, and give proposed wording changes which would alleviate the problems. Enter in block 6 any remarks not related to a specific paragraph of the document. If block 7 is filled out, an acknowledgement will be mailed to you within 30 days to let you know that your comments were received and are being considered.

NOTE: This form may not be used to request copies of documents, nor to request waivers, deviations, or clarification of specification requirements on current contracts. Comments submitted on this form do not constitute or imply authorizatio to waive any portion of the referenced document*(s)* or to amend contractual requirements.

(Fold along this line)

(Fold along this line)

DEPARTMENT OF THE AIR FORCE

Rome Air Development Center
Griffiss AFB, NY 13441

OFFICIAL BUSINESS
PENALTY FOR PRIVATE USE $300

NO POST
NECESSA
IF MAIL
IN THE
UNITED ST

BUSINESS REPLY MAIL
FIRST CLASS PERMIT NO 73236 WASHINGTON D C

POSTAGE WILL BE PAID BY THE DEPARTMENT OF THE AIR FORCE

Commander
Rome Air Development Center
Attn: RBE-2
Griffiss AFB, NY 13441

Source: https://assist.dla.mil -- Downloaded: 2016-12-04T06:31Z
Check the source to verify that this is the current version before use.

STANDARDIZATION DOCUMENT IMPROVEMENT PROPOSAL

(See Instructions – Reverse Side)

1. DOCUMENT NUMBER	2. DOCUMENT TITLE
MIL-S-19500/385A	SEMICONDUCTOR DEVICE, TYPES 2N4856 THROUGH 2N4861

3a. NAME OF SUBMITTING ORGANIZATION	4. TYPE OF ORGANIZATION *(Mark one)*
	☐ VENDOR
b. ADDRESS *(Street, City, State, ZIP Code)*	☐ USER
	☐ MANUFACTURER
	☐ OTHER *(Specify)*: _____

5. PROBLEM AREAS

a. Paragraph Number and Wording:

b. Recommended Wording:

c. Reason/Rationale for Recommendation:

6. REMARKS

7a. NAME OF SUBMITTER *(Last, First, MI)* – Optional	b. WORK TELEPHONE NUMBER *(Include Area Code)* – Optional
c. MAILING ADDRESS *(Street, City, State, ZIP Code)* – Optional	8. DATE OF SUBMISSION *(YYMMDD)*

(TO DETACH THIS FORM, CUT ALONG THIS LINE.)

DD FORM 82 MAR 1426 PREVIOUS EDITION IS OBSOLETE

Source: https://assist.dla.mil -- Downloaded: 2016-12-04T06:31Z
Check the source to verify that this is the current version before use.