MILITARY SPECIFICATION SHEET

INTERCONNECTION BOX, FIBER OPTIC, SHIPBOARD SUBMERSIBLE, 20.3 X 25.4 CM (METRIC)

This specification is approved for use by the Department of the Navy, and is available for use by all Departments and Agencies of the Department of Defense.

The requirements for acquiring the product described herein shall consist of this specification sheet and the issue of the following specification listed in that issue of the Department of Defense Index of Specifications and Standards (DODISS) specified in the solicitation: MIL-I-24728.

DESIGN AND CONSTRUCTION

Configuration and physical dimensions: See figures 1A and 1B, table I.
Degree of enclosure: Submersible, 4.3 meters.
Interconnection box mounting: See figures 2 and 3.
Cable-interconnection interface: See figures 1A and 1B.

Interconnect organization:

Fiber optic splices: mechanical/fusion, 144 maximum.
Fiber optic connectors: 42 maximum, see figure 4.
Fiber optic couplers: N/A.
Fiber and splice organizers: See figure 5.

Splice chart: See figure 6.

Weight: ≤ 20 lbs.

Size: 20.3 X 25.4 cm.

DISTRIBUTION STATEMENT A. Approved for public release; distribution is unlimited.

Source: https://assist.dla.mil -- Downloaded: 2016-12-10T06:30Z
Check the source to verify that this is the current version before use.

ENVIRONMENTAL PROPERTIES

Temperature range: 1 (Operating: minus 54 to plus 65°C
Storage: minus 62 to plus 71°C).

PART OR IDENTIFYING NUMBER: D24728/01-001, figure 1A,
D24728/01-002, figure 1B.

Review activities:
Navy - EC, YD

Preparing activity:
Navy - SH
(Project 6099-N001-01)

Source: https://assist.dla.mil -- Downloaded: 2016-12-10T06:30Z
Check the source to verify that this is the current version before use.

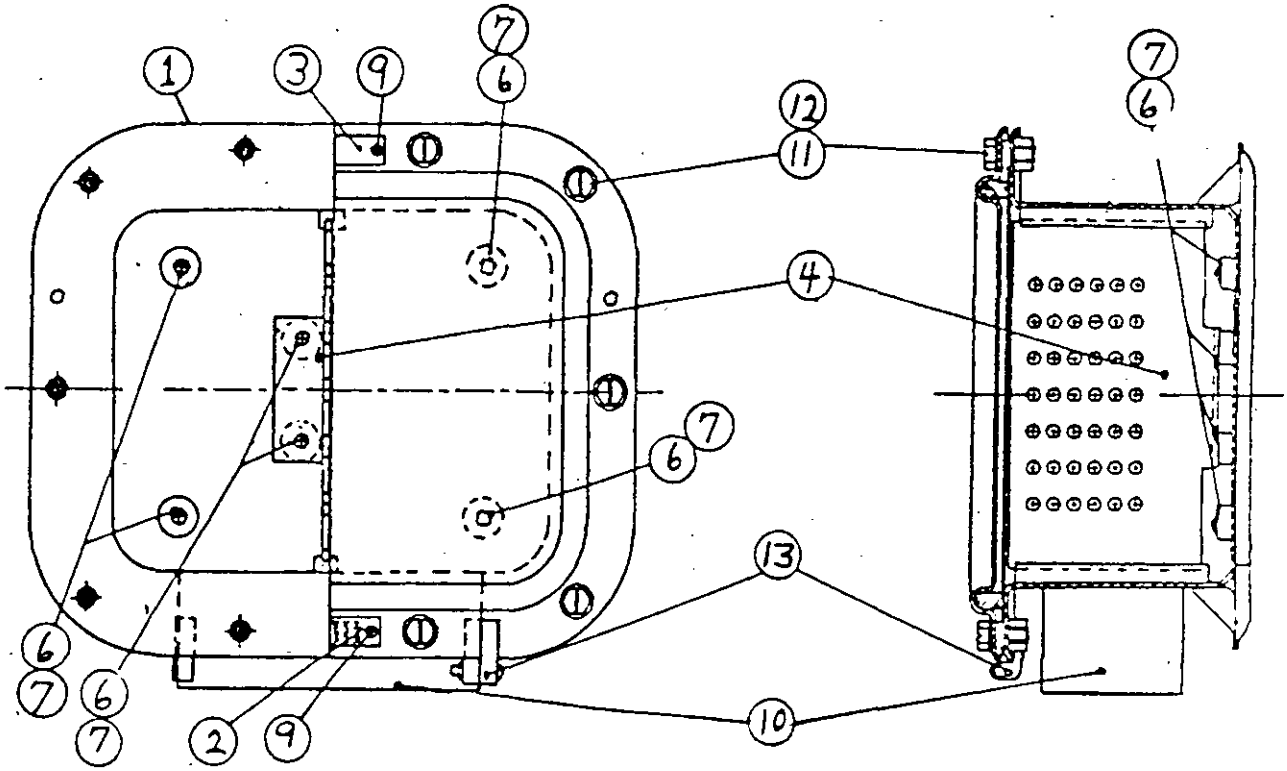

FIGURE 1A. Interconnection box assembly, single mini MCT frame showing connector patch panel installed, part number D24728/01-001.

Source: https://assist.dla.mil -- Downloaded: 2016-12-10T06:30Z
Check the source to verify that this is the current version before use.

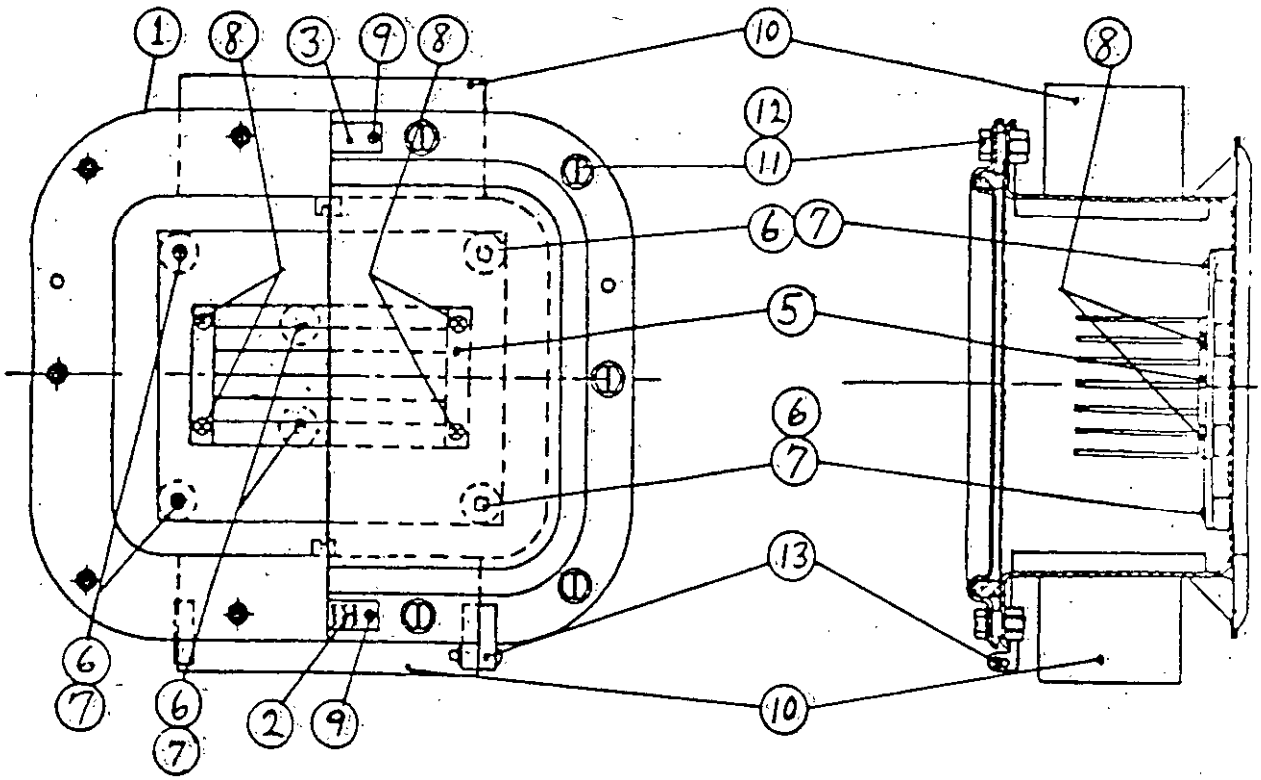

FIGURE 1B. Interconnection box assembly, dual mini MCT frame showing mechanical/fusion splice optical patch panel installed, part number D24728/01-002.

Source: https://assist.dla.mil -- Downloaded: 2016-12-10T06:30Z
Check the source to verify that this is the current version before use.

TABLE I. Parts list.

Item	Description	Quantity -001	Quantity -002	Specification
1	Enclosure assembly aluminum with type B cover	1	1	MIL-E-24142/6
2	Identification plate	1	1	MIL-P-15024/6
3	Information plate	1	1	MIL-P-15024/14
4	Optical patch panel, connector	1	1	MIL-I-24728/1, figure 4
5	Optical patch panel, mechanical fusion splice	1	1	MIL-I-24728/1, figure 5
6	RH machine screw #10-24x5/8 inch long	6	6	-
7	Washer for #10 screw	6	6	-
8	FH machine screw #8-32x1/4 inch long	4	4	-
9	RH machine screw #6-32x1/4 inch long	4	4	-
10	Mini MCT frame, 60 X 135 mm aluminum	1	2	-
11	Cover, bolt	10	10	MIL-E-24142
12	Washer, SAE flat, 3/8 inch	10	10	
13	Hinge, cover, aluminum	1	1	MIL-E-24142

Source: https://assist.dla.mil -- Downloaded: 2016-12-10T06:30Z
Check the source to verify that this is the current version before use.

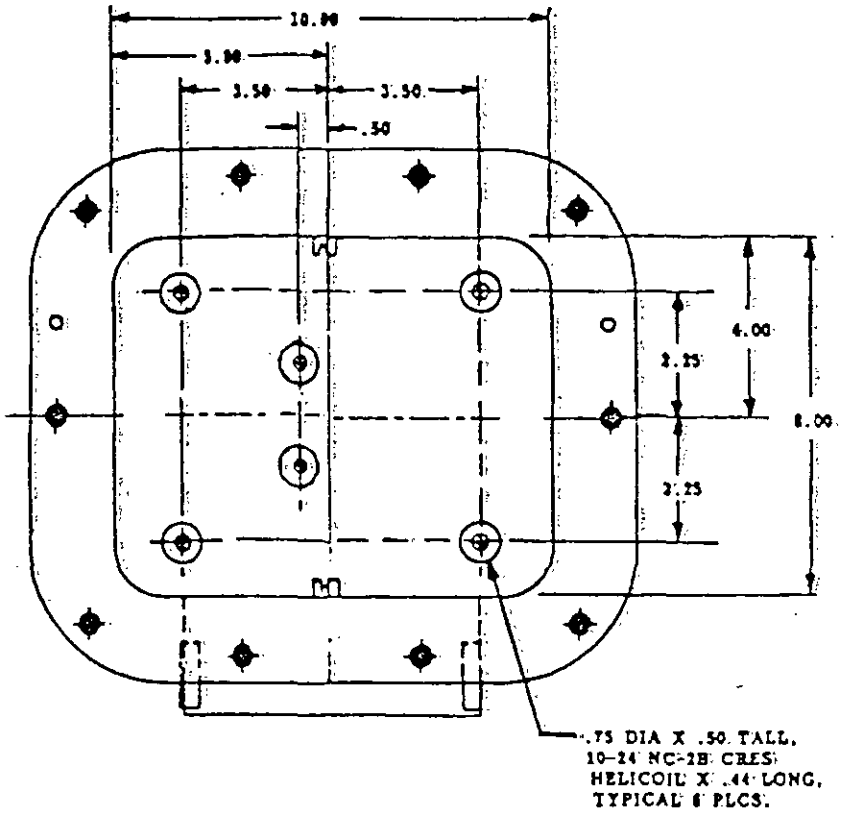

FIGURE 2. Location of optical patch panel mounting pads.

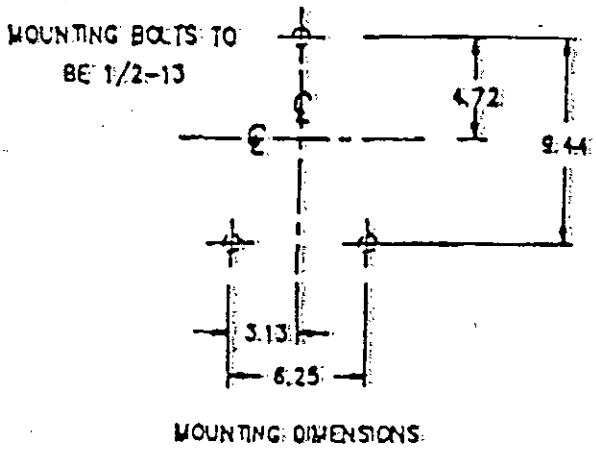

FIGURE 3. Interconnection box mounting dimensions.

Source: https://assist.dla.mil -- Downloaded: 2016-12-10T06:30Z
Check the source to verify that this is the current version before use.

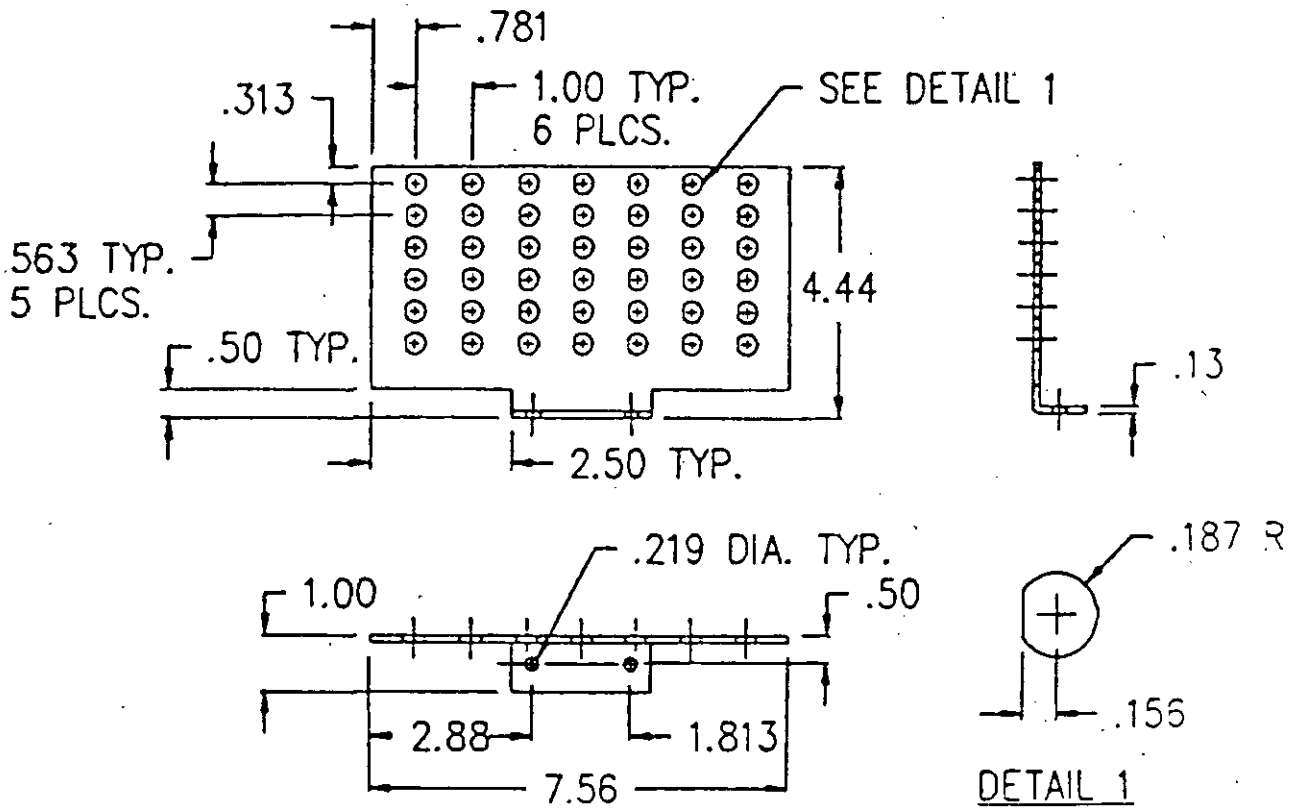

FIGURE 4. Optical patch panel, connectors.

Source: https://assist.dla.mil -- Downloaded: 2016-12-10T06:30Z
Check the source to verify that this is the current version before use.

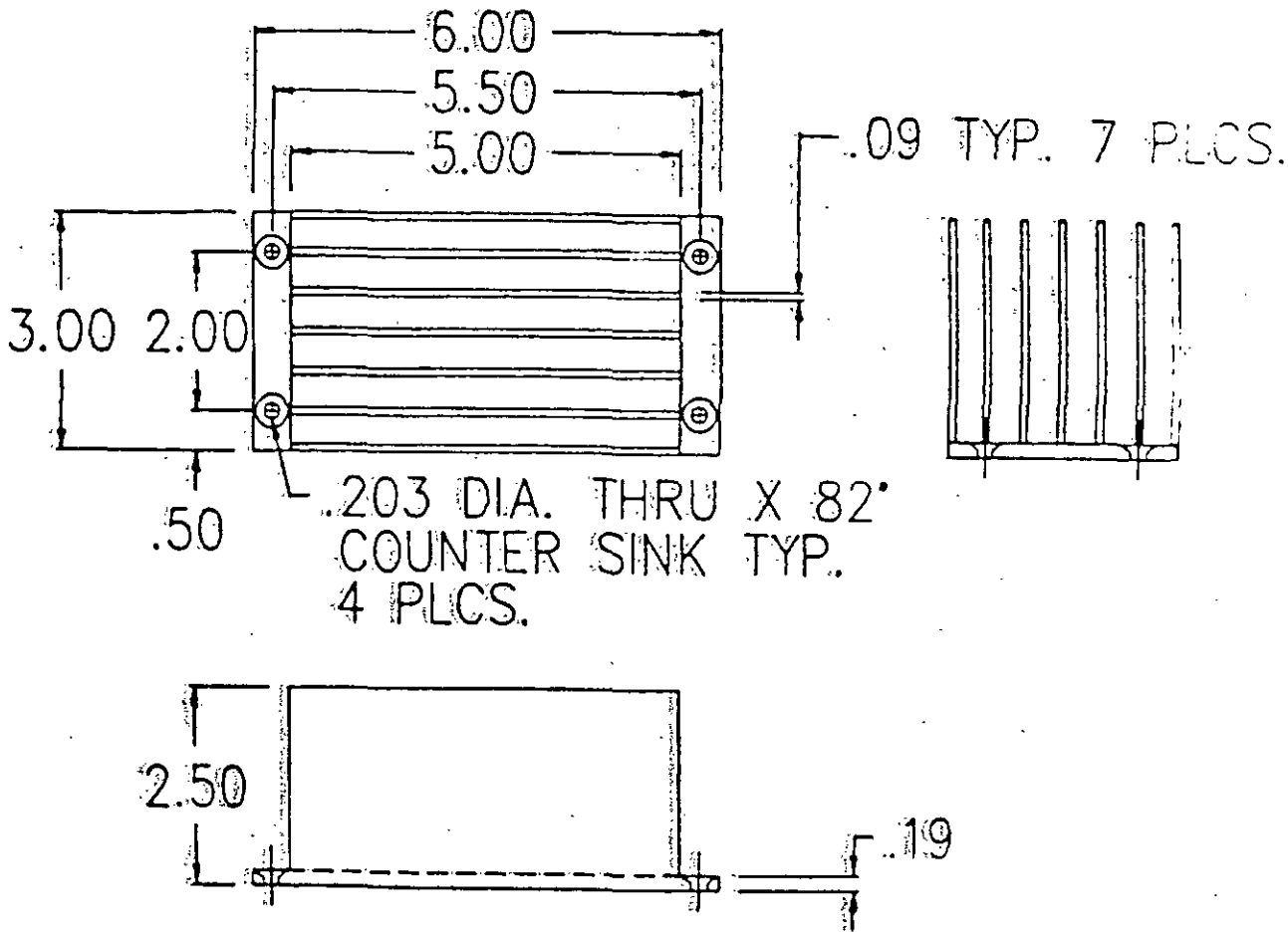

FIGURE 5. Optical patch panel, mechanical/fusion splices.

Source: https://assist.dla.mil -- Downloaded: 2016-12-10T06:30Z
Check the source to verify that this is the current version before use.

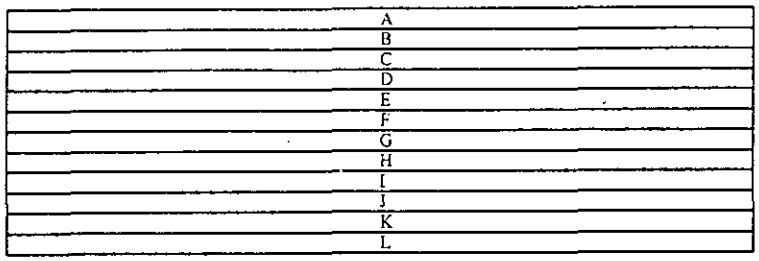

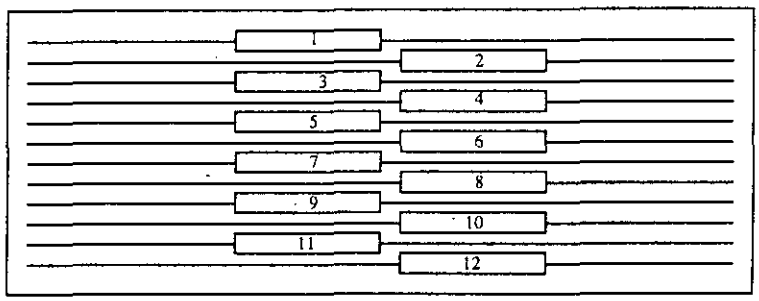

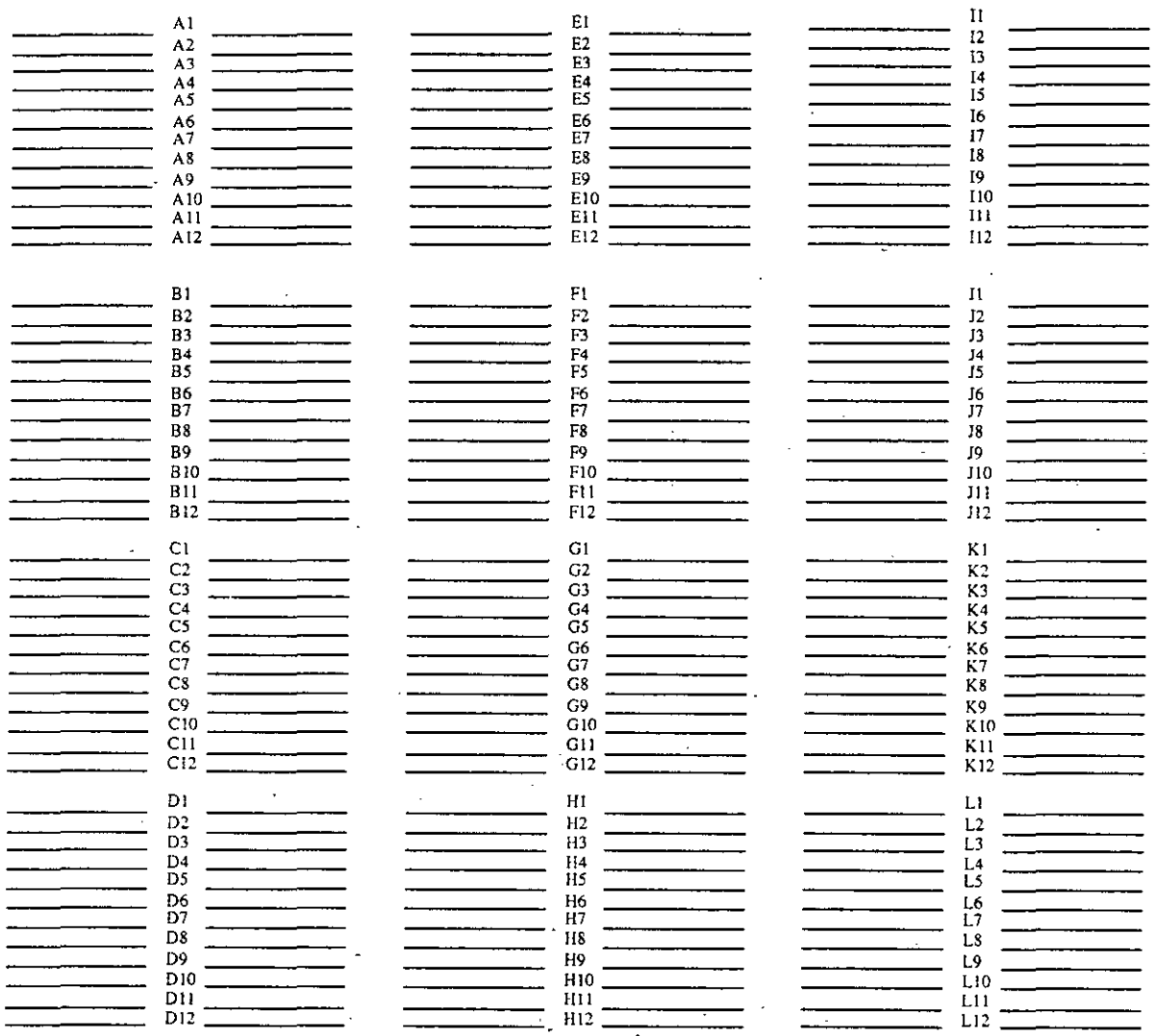

FIGURE 6. Splice Chart.

Source: https://assist.dla.mil -- Downloaded: 2016-12-10T06:30Z
Check the source to verify that this is the current version before use.

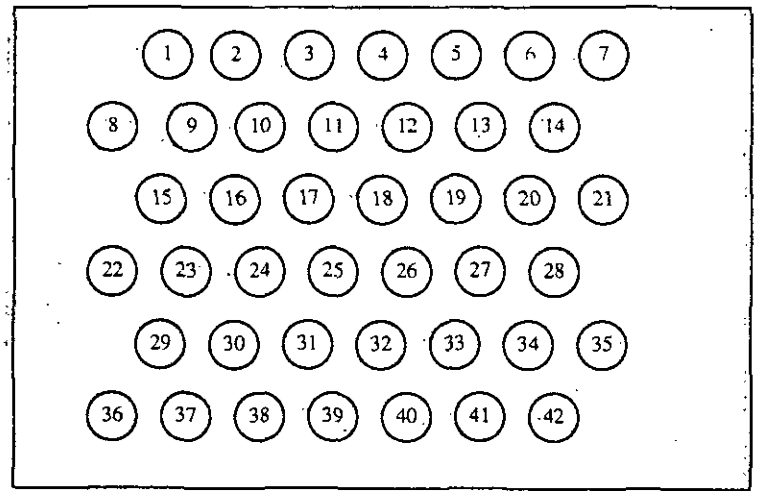

	1		22
	2		23
	3		24
	4		25
	5		26
	6		27
	7		28
	8		29
	9		30
	10		31
	11		32
	12		33
	13		34
	14		35
	15		36
	16		37
	17		38
	18		39
	19		40
	20		41
	21		42

FIGURE 6. Splice Chart - Continued.

Source: https://assist.dla.mil -- Downloaded: 2016-12-10T06:30Z
Check the source to verify that this is the current version before use.