NOTICE OF CHANGE

INCH-POUND

The documentation and process conversion measures necessary to comply with this notice shall be completed by 30 July 2001.

MIL-STD-750D
NOTICE 4
30 April 2001

DEPARTMENT OF DEFENSE

TEST METHOD STANDARD FOR SEMICONDUCTOR DEVICES

TO ALL HOLDERS OF MIL-STD-750D:

1. THE FOLLOWING PAGES OF MIL-STD-750D HAVE BEEN REVISED AND SUPERSEDE THE PAGES LISTED:

NEW PAGE	DATE	SUPERSEDED PAGE	DATE
15	30 April 2001	15	29 February 2000
16	30 April 2001	16	29 February 2000
17	30 April 2001	17	29 February 2000
18	30 April 2001	18	29 February 2000
19/20	30 April 2001	19/20	29 February 2000

2. THE FOLLOWING TEST METHODS OF MIL-STD-750D HAVE BEEN REVISED AND SUPERSEDE THE TEST METHOD LISTED:

METHOD	DATE	SUPERSEDED METHOD	DATE
1018.1	30 April 2001	1018	28 February 1995
1071.7	30 April 2001	1071.6	18 May 1995
2069.2	30 April 2001	2069.1	23 February 1996
2071.5	30 April 2001	2071.4	28 February 1995
2073.1	30 April 2001	2073	28 February 1995
3131.3	30 April 2001	3131.2	28 February 1995
3471.2	30 April 2001	3471.1	28 February 1995
4066.4	30 April 2001	4066.3	28 February 1995

3. THE FOLLOWING NEW METHODS HAVE BEEN ADDED:

METHOD	TITLE	DATE
1033	Reverse Voltage Leakage Stability	30 April 2001

4. RETAIN THIS NOTICE AND INSERT BEFORE TABLE OF CONTENTS.

DISTRIBUTION STATEMENT A. Approved for public release; distribution is unlimited.

Source: https://assist.dla.mil -- Downloaded: 2016-12-03T20:24Z
Check the source to verify that this is the current version before use.

5. Holders of MIL-STD-750D will verify that page changes and additions indicated above have been entered. This notice page will be retained as a check sheet. This issuance, together with appended pages, is a separate publication. Each notice is to be retained by stocking points until the military standard is completely revised or canceled.

Custodians:
Army - CR
Navy - NW
Air Force - 11
NASA – NA
DLA-CC

Review activities:
Army - AR, MI
Navy - AS, CG, MC, SH
Air Force – 19, 99

Preparing activity:
DLA - CC

(Project 5961-2364)

Source: https://assist.dla.mil -- Downloaded: 2016-12-03T20:24Z
Check the source to verify that this is the current version before use.

Numerical Index of Test Methods

METHOD NO.	TITLE
Environmental tests (1000 series).	
1001.2	Barometric pressure (reduced).
1011.1	Immersion.
1015.1	Steady-state primary photocurrent irradiation procedure (electron beam).
1016	Insulation resistance.
1017.1	Neutron irradiation.
*1018.1	Internal Gas Analysis
1019.4	Steady-state total dose irradiation procedure.
1020.2	Electrostatic discharge sensitivity (ESDS) classification.
1021.3	Moisture resistance.
1022.5	Resistance to solvents.
1026.5	Steady-state operation life.
1027.3	Steady-state operation life (sample plan).
1031.5	High-temperature life (nonoperating).
1032.2	High-temperature (nonoperating) life (sample plan).
*1033	Reverse Voltage Leakage Stability
1036.3	Intermittent operation life.
1037.2	Intermittent operation life (sample plan).
1038.4	Burn-in (for diodes, rectifiers, and zeners).
1039.4	Burn-in (for transistors).
1040	Burn-in (for thyristors (controlled rectifiers)).
1041.3	Salt atmosphere (corrosion).
1042.3	Burn-in and life test for power MOSFET's or insulated gate bipolar transistors (IGBT).
1046.3	Salt spray (corrosion).
1048	Blocking life.
1049	Blocking life (sample plan).
1051.7	Temperature cycling (air to air).
1054.1	Potted environment stress test.
1055.1	Monitored mission temperature cycle.
1056.7	Thermal shock (liquid to liquid).
1061.1	Temperature measurement, case and stud.
1066.1	Dew point.
*1071.7	Hermetic seal
1080	Single Event Gate Rupture and Drain Burnout Test
Mechanical characteristics tests (2000 series).	
2005.2	Axial lead tensile test.
2006	Constant acceleration.
2016.2	Shock.
2017.2	Die attach integrity.
2026.10	Solderability.
2031.2	Soldering heat.
2036.4	Terminal strength.
2037.1	Bond strength.
2046.1	Vibration fatigue.
2051.1	Vibration noise.
2052.3	Particle impact noise detection (PIND) test.

SUPERSEDES PAGE 15 OF NOTICE 3 TO MIL-STD-750D.

Source: https://assist.dla.mil -- Downloaded: 2016-12-03T20:24Z
Check the source to verify that this is the current version before use.

Numerical Index of Test Methods - Continued.

METHOD NO.	TITLE
Mechanical characteristics tests (2000 series) - Continued.	
2056	Vibration, variable frequency.
2057.1	Vibration, variable frequency (monitored).
2066	Physical dimensions.
2068	External visual for nontransparent, glass-encased, double plug, noncavity, axial leaded diodes.
*2069.2	Pre-cap visual, power MOSFET's.
2070.2	Pre-cap visual microwave discrete and multichip transistors.
*2071.5	Visual and mechanical examination.
2072.6	Internal visual transistor (pre-cap) inspection.
*2073.1	Internal inspection for die (semiconductor diode).
2074.4	Internal visual inspection (discrete semiconductor diodes).
2075.1	Decap internal visual design verification.
2076.3	Radiography.
2077.3	Scanning electron microscope (SEM) inspection of metallization.
2081	Forward instability, shock (FIST).
2082	Backward instability, vibration (BIST).
2101.1	DPA procedures for diodes.
2102	DPA for wire bonded devices
Electrical characteristics tests for bipolar transistors (3000 series).	
3001.1	Breakdown voltage, collector to base.
3005.1	Burnout by pulsing.
3011.2	Breakdown voltage, collector to emitter.
3015	Drift.
3020	Floating potential.
3026.1	Breakdown voltage, emitter to base.
3030	Collector to emitter voltage.
3036.1	Collector to base cutoff current.
3041.1	Collector to emitter cutoff current.
3051	Safe operating area (continuous dc).
3052	Safe operating area (pulsed).
3053	Safe operating area (switching).
3061.1	Emitter to base cutoff current.
3066.1	Base emitter voltage (saturated or nonsaturated).
3071	Saturation voltage and resistance.
3076.1	Forward-current transfer ratio.
3086.1	Static input resistance.
3092.1	Static transconductance.
Circuit-performance and thermal resistance measurements (3100 series).	
3101.3	Thermal impedance testing of diodes.
3103	Thermal impedance measurements for insulated gate bipolar transistor (delta gate-emitter on voltage method).
3104	Thermal impedance measurements of GaAs MOSFET's (constant current forward-biased gate voltage method).
3105.1	Measurement method for thermal resistance of a bridge rectifier assembly.

SUPERSEDES PAGE 16 OF NOTICE 3 TO MIL-STD-750D.

Source: https://assist.dla.mil -- Downloaded: 2016-12-03T20:24Z
Check the source to verify that this is the current version before use.

Numerical Index of Test Methods - Continued.

METHOD NO.	TITLE
Circuit-performance and thermal resistance measurements (3100 series) - Continued.	
3126	Thermal resistance (collector-cutoff-current method).
*3131.3	Thermal impedance measurements for bipolar transistors (delta base-emitter voltage method).
3132	Thermal resistance (dc forward voltage drop, emitter base, continuous method).
3136	Thermal resistance (forward voltage drop, collector to base, diode method).
3141	Thermal response time.
3146.1	Thermal time constant.
3151	Thermal resistance, general.
3161	Thermal impedance measurements for vertical power MOSFET's (delta source-drain voltage method).
3181	Thermal resistance for thyristors.
Low frequency tests (3200 series).	
3201.1	Small-signal short-circuit input impedance.
3206.1	Small-signal short-circuit forward-current transfer ratio.
3211	Small-signal open-circuit reverse-voltage transfer ratio.
3216	Small-signal open-circuit output admittance.
3221	Small-signal short-circuit input admittance.
3231	Small-signal short-circuit output admittance.
3236	Open circuit output capacitance.
3240.1	Input capacitance (output open-circuited or short-circuited).
3241	Direct interterminal capacitance.
3246.1	Noise figure.
3251.1	Pulse response.
3255	Large signal power gain.
3256	Small signal power gain.
3261.1	Extrapolated unity gain frequency.
3266	Real part of small-signal short circuit input impedance.
High frequency tests (3300 series)	
3301	Small-signal short-circuit forward-current transfer-ratio cutoff frequency.
3306.3	Small-signal short-circuit forward-current transfer ratio.
3311	Maximum frequency of oscillation.
3320	RF power output, RF power gain, and collector efficiency.
Electrical characteristics tests for MOS field-effect transistors (3400 series)	
3401.1	Breakdown voltage, gate to source.
3403.1	Gate to source voltage or current.
3404	MOSFET threshold voltage.
3405.1	Drain to source on-state voltage.
3407.1	Breakdown voltage, drain to source.
3411.1	Gate reverse current.
3413.1	Drain current.
3415.1	Drain reverse current.
3421.1	Static drain to source on-state resistance.
3423	Small-signal, drain to source on state resistance.
3431	Small-signal, common-source, short-circuit, input capacitance.
3433	Small-signal, common-source, short-circuit, reverse-transfer capacitance.

SUPERSEDES PAGE 17 OF NOTICE 3 TO MIL-STD-750D.

Source: https://assist.dla.mil -- Downloaded: 2016-12-03T20:24Z
Check the source to verify that this is the current version before use.

Numerical Index of Test Methods - Continued.

METHOD NO.	TITLE
Electrical characteristics tests for MOS field-effect transistors (3400 series) - Continued.	
3453	Small-signal, common-source, short-circuit, output admittance.
3455	Small-signal, common-source, short-circuit, forward transadmittance.
3457	Small-signal, common-source, short-circuit, reverse transfer admittance.
3459	Pulse response (FET).
3461	Small-signal, common-source, short-circuit, input admittance.
3469	Repetitive unclamped inductive switching.
3470.2	Single pulse unclamped inductive switching.
*3471.2	Gate charge.
3472.2	Switching time test.
3473.1	Reverse recovery time (t_{rr}) and recovered charge (Q_{rr}) for power MOSFET (drain-to-source) and power rectifiers with t_{rr} • 100 ns.
3474.1	Safe operating area for power MOSFET's or insulated gate bipolar transistors.
3475.1	Forward transconductance (pulsed dc method) of power MOSFET's or insulated gate bipolar transistors.
3476	Commutating diode for safe operating area test procedure for measuring dv/dt during reverse recovery of power MOSFET transistors or insulated gate bipolar transistors.
3477.1	Measurement of insulated gate bipolar transistor total switching losses and switching times.
3478.1	Power transistor electrical dose rate test method.
3479	Short circuit withstand time.
3490	Clamped inductive switching safe operating area for MOS gated power transistors.
Electrical characteristics tests for Gallium Arsenide transistors (3500 series)	
3501	Breakdown voltage, drain to source.
3505	Maximum available gain of a GaAs FET.
3510	1 dB compression point of a GaAs FET.
3570	GaAs FET forward gain (Mag S21).
3575	Forward transconductance.
Electrical characteristics tests for diodes (4000 series).	
4000	Condition for measurement of diode static parameters.
4001.1	Capacitance.
4011.4	Forward voltage.
4016.4	Reverse current leakage.
4021.2	Breakdown voltage (diodes).
4022	Breakdown voltage (voltage regulators and voltage-reference diodes).
4023	Scope display.
4026.3	Forward recovery voltage and time.
4031.4	Reverse recovery characteristics.
4036.1	"Q" for voltage variable capacitance diodes.
4041.2	Rectification efficiency.
4046.1	Reverse current, average.
4051.3	Small-signal reverse breakdown impedance.
4056.2	Small-signal forward impedance.
4061.1	Stored charge.

SUPERSEDES PAGE 18 OF NOTICE 3 TO MIL-STD-750D.

Source: https://assist.dla.mil -- Downloaded: 2016-12-03T20:24Z
Check the source to verify that this is the current version before use.

Numerical Index of Test Methods - Continued.

METHOD NO.	TITLE
Electrical characteristics tests for diodes (4000 series) - Continued.	
*4066.4	Surge current.
4071.1	Temperature coefficient of breakdown voltage.
4076.1	Saturation current.
4081.2	Thermal resistance of lead mounted diodes (forward voltage, switching method).
Electrical characteristics tests for microwave diodes (4100 series)	
4101.3	Conversion loss.
4102	Microwave diode capacitance.
4106	Detector power efficiency.
4111.1	Figure of merit (current sensitivity).
4116.1	IF impedance.
4121.2	Output noise ratio.
4126.2	Overall noise figure and noise figure of the IF amplifier.
4131.1	Video resistance.
4136.1	Standing wave ratio (SWR).
4141.1	Burnout by repetitive pulsing.
4146.1	Burnout by single pulse.
4151	Rectified microwave diode current.
Electrical characteristics tests for tunnel diodes (4300 series)	
4301	Junction capacitance.
4306.1	Static characteristics of tunnel diodes.
4316	Series inductance.
4321	Negative resistance.
4326	Series resistance.
4331	Switching time.
High reliability space application tests (5000 series)	
5001.2	Wafer lot acceptance testing.
5002	Capacitance-voltage measurements to determine oxide quality.
5010	Clean room and workstation airborne particle classification and measurement.

SUPERSEDES PAGE 19/20 OF NOTICE 3 TO MIL-STD-750D.

Source: https://assist.dla.mil -- Downloaded: 2016-12-03T20:24Z
Check the source to verify that this is the current version before use.

METHOD 1018.1

INTERNAL GAS ANALYSIS

1. Purpose. The purpose of this test is to measure the water-vapor content of the atmosphere inside a metal or ceramic hermetically-sealed device. It can be destructive (procedures 1 and 2) or nondestructive (procedure 3).

2. Apparatus. The apparatus for the internal water-vapor content test shall be as follows for the chosen procedure:

2.1 Procedure 1. (Procedure 1 measures the water-vapor content of the device atmosphere by mass spectrometry.) The apparatus for procedure 1 shall consist of:

a. A mass spectrometer meeting the following requirements:

(1) Spectra range. The mass spectrometer shall be capable of reading a minimum spectra range of 1 to 100 atomic mass units (AMUs).

(2) Detection limit. The mass spectrometer shall be capable of reproducibly detecting the specified moisture content for a given volume package with signal to noise ratio of 20 to 1 (i.e., for a specified limit of 5,000 parts per million volume (ppmv), .01 cc, the mass spectrometer shall demonstrate a 250 ppmv minimum detection limit to moisture for a package volume of .01 cc). The smallest volume shall be considered the worst case.

(3) Calibration. The calibration of the mass spectrometer shall be accomplished at the specified moisture limit (±20 percent) using a package simulator which has the capability of generating at least three known volumes of gas ±10 percent on a repetitive basis by means of a continuous sample volume purge of known moisture content ±10 percent. Moisture content shall be established by the standard generation techniques (i.e., 2 pressure, divided flow, or cryogenic method). The dew point analyzer shall be recalibrated a minimum of once per year using equipment traceable to NIST or by a suitable commercial calibration services laboratory using equipment traceable to NIST standards. Calibration records shall be kept on a daily basis. Gas analysis results obtained by this method shall be considered valid only in the moisture range or limit bracketed by at least two (volume or concentration) calibration points (i.e., 5,000 ppmv between .01 - .1 cc or 1,000 - 5,000 ppmv between .01 - .1 cc). A best fit curve shall be used between volume calibration points. Systems not capable of bracketing may use an equivalent procedure as approved by the qualifying activity. Corrections of sensitivity factors deviating greater than 10 percent from the mean between calibration points shall be required.

NOTE: It is recommended that the percentage of water vapor contained in a gas flowing through the gas humidifier be compared to the dewpoint sensor reading for accuracy of the sensor. The following equation may be used to calculate the percent of water vapor contained in a gas flowing through the gas humidifier.

$$\%H2O = \frac{100\ (Pv\ \text{mb})}{68.95\ \text{mb/psi}\ \ Pg + 1.33\ \text{mb/mm}\ \ Pa}$$

Where:
P_v = vapor pressure of water in the GPH based on water temperature in degrees centigrade,
P_g = gauge pressure in psi, and
P_a = atmospheric pressure in mm Hg.

Source: https://assist.dla.mil -- Downloaded: 2016-12-03T20:24Z
Check the source to verify that this is the current version before use.

(4) Calibration for other gases. Calibration shall be required for all gases found in concentrations greater than .01 percent by volume. As a minimum, this shall include all gases listed in 3.1c. The applicable gases shall be calibrated at approximately 1 percent concentrations as part of the yearly calibration requirements, with the exception of fluorocarbons, which may use a concentration of 200 ppmv, and nitrogen, which may use a concentration of greater than 80 percent.

(5) Calibration check. The system calibration shall be checked on the day of test prior to any testing. This shall include checking the calibration by in-letting a 5000 ppmv ±20 percent moisture calibration sample of the required volumes and comparing the result with the calibration sample. The resulting moisture reading shall be within 250 ppmv of the moisture level in the calibration sample. Calibration performed on the day of test prior to any testing may be substituted for this calibration check.

b. A vacuum opening chamber which can contain the device and a vacuum transfer passage connecting the device to the mass spectrometer of 2.1a. The system shall be maintained at a stable temperature equal to or above the device temperature. The fixturing in the vacuum opening chamber shall position the specimen as required by the piercing arrangement of 2.1c, and maintain the device at 100°C ±5°C for a minimum of 10 minutes prior to piercing.

NOTE: A maximum 5 minute transfer time from prebake to hot insertion into apparatus shall be allowed. If 5 minutes is exceeded, device shall be returned to the prebake oven and prebake continued until device reaches 100°C ± 5°C.

For initial certification of systems or extension of suitability, device temperature on systems using an external fixture shall be characterized by placing a thermocouple into the cavity of a blank device of similar mass, internal volume, construction and size. This shall be a means for proving the device temperature has been maintained at 100°C ± 5°C for the minimum 10 minutes. This also applies to devices prebaked in an external oven but tested with the external fixture to adjust for any temperature drop during the transfer. These records shall be maintained by the test laboratory.

c. A piercing arrangement functioning within the opening chamber or transfer passage of 2.1b, which can pierce the specimen housing (without breaking the mass spectrometer chamber vacuum and without disturbing the package sealing medium), thus allowing the specimen's internal gases to escape into the chamber and mass spectrometer.

NOTE: A sharp-pointed piercing tool, actuated from outside the chamber wall via a bellows to permit movement, should be used to pierce both metal and ceramic packages. For ceramic packages, the package lid or cover should be locally thinned by abrasion to facilitate localized piercing.

2.2 Procedure 2. (Procedure 2 measures the water-vapor content of the device atmosphere by integrating moisture picked up by a dry carrier gas at 50°C.) The apparatus for procedure 2 shall consist of:

a. An integrating electronic detector and moisture sensor capable of reproducibly detecting a water-vapor content of 300 ppmv ±50 ppmv moisture for the package volume being tested. This shall be determined by dividing the absolute sensitivity in micrograms H_20 by the computed weight of the gas in the device under test, and then correcting to ppmv.

b. A piercing chamber or enclosure, connected to the integrating detector of 2.2a, which will contain the device specimen and maintain its temperature at 100°C ±5°C during measurements. The chamber shall position the specimen as required by the piercing arrangement. The piercing mechanism shall open the package in a manner which will allow the contained gas to be purged out by the carrier gas or removed by evacuation. The sensor and connection to the piercing chamber will be maintained at a temperature of 50°C ±2°C.

Source: https://assist.dla.mil -- Downloaded: 2016-12-03T20:24Z
Check the source to verify that this is the current version before use.

2.3 Procedure 3. (Procedure 3 measures the water-vapor content of the device atmosphere by measuring the response of a calibrated moisture sensor or an IC chip which is sealed within the device housing, with its electrical terminals available at the package exterior.) The apparatus for procedure 3 shall consist of one of the following:

a. A moisture sensor element and readout instrument capable of detecting a water-vapor content of 300 ppmv ±50 ppmv while sensor is mounted inside a sealed device.

b. Metallization runs on the device being tested isolated by back-biased diodes which when connected as part of a bridge network can detect 2,000 ppmv within the cavity. The chip shall be cooled in a manner such that the chip surface is the coolest surface in the cavity. The device shall be cooled below dew point and then heated to room temperature as one complete test cycle.

   NOTE: Suitable types of sensors may include (among others) parallel or interdigitated metal stripes on an oxidized silicon chip, and porous anodized-aluminum structures with gold-surface electrodes.

Surface conductivity sensors may not be used in metal packages without external package wall insulation. When used, the sensor shall be the coolest surface in the cavity. It should be noted that some surface conductivity sensors require a higher ionic content than available in ultraclean CERDIP packages. In any case, correlation with mass spectrometer procedure 1 shall be established by clearly showing that the sensor reading can determine whether the cavity atmosphere has more or less than the specified moisture limit at 100°C.

3. Procedure. The internal water-vapor content test shall be conducted in accordance with the requirement of procedure 1, procedure 2, or procedure 3. All devices shall be prebaked for 16 to 24 hours at 100°C ±5°C prior to hot insertion into apparatus. External ovens shall have a means to indicate if a power interuption occurs during the prebaking period and for how long the temperature drops below 100°C ± 5°C. Devices baked in an external oven which loses power and whose temperature drops below 100°C ± 5°C for more than 1 hour shall undergo another prebake to begin a minimum of 12 hours later.

NOTE: It is recommended that samples submitted to the labs shall include information about the manufacturing process including sealing temperature, sealing pressure, sealing gas, free internal cavity volume, lid thickness at puncture site, lid material, and the location of the puncture site.

3.1 Procedure 1. The device shall be hermetic in accordance with test method 1071, and free from any surface contaminants which may interfere with accurate water-vapor content measurement.

After device insertion, the device and chamber shall be pumped down and baked out at a temperature of 100°C ±5°C until the background pressure level will not prevent achieving the specified measurement accuracy and sensitivity. After pumpdown, the device case or lid shall be punctured and the following properties of the released gases shall be measured, using the mass spectrometer:

a. The increase in chamber pressure as the gases are released by piercing the device package. A pressure rise of less than 50 percent of normal for that package volume and pressurization may indicate that (1) the puncture was not fully accomplished, (2) the device package was not sealed hermetically, or (3) does not contain the normal internal pressure.

b. The water-vapor content of the released gases, as a percent by unit volume or ppmv of the total gas content.

c. The proportions (by volume) of the other following gases: N_2, He, Mass 69 (fluorocarbons), O_2, Ar, H_2, CO_2, CH_4, NH_3, and other solvents, if available. Calculations shall be made and reported on all gases present greater than .01 percent by volume. Data reduction shall be performed in a manner which will preclude the cracking pattern interference from other gas specie in the calculations of moisture content. Data shall be corrected for any system dependent matrix effects such as the presence of hydrogen in the internal ambient.

Source: https://assist.dla.mil -- Downloaded: 2016-12-03T20:24Z
Check the source to verify that this is the current version before use.

3.1.1 Failure criteria.

a. A device which has a water-vapor content greater than the specified maximum value shall constitute a failure.

b. A device which exhibits an abnormally low total gas content, as defined in 3.1a, shall constitute a failure, if it is not replaced. Such a device may be replaced by another device from the same population; if the replacement device exhibits normal total gas content for its type, neither it nor the original device shall constitute a failure for this cause.

3.2 Procedure 2. The device shall be hermetic in accordance with test method 1071, and free from any surface contaminants which may interfere with accurate water-vapor content measurement.

After device insertion into the piercing chamber, gas shall be flowed through the system until a stable base-line value of the detector output is attained. With the gas flow continuing, the device package shall then be pierced so that a portion of the purge gas flows through the package under test and the evolved moisture integrated until the base-line detector reading is again reached. An alternative allows the package gas to be transferred to a holding chamber which contains a moisture sensor and a pressure indicator. System is calibrated by injecting a known quantity of moisture or opening a package of known moisture content.

3.2.1 Failure criteria.

a. A device which has a water-vapor content (by volume) greater than the specified maximum value shall constitute a failure.

b. After removal from the piercing chamber, the device shall be inspected to ascertain that the package has been fully opened. A device package which was not pierced shall constitute a failure, if the test is not performed on another device from the same population; if this retest sample or replacement is demonstrated to be pierced and meets the specified water-vapor content criteria, the specimen shall be considered to have passed the test.

c. A package which is a leaker in the purge case will be wet and counted as a failure. In the case of evacuation, a normal pressure rise shall be measured as in 3.1a.

3.3 Procedure 3. The moisture sensor shall be calibrated in an atmosphere of known water-vapor content, such as that established by a saturated solution of an appropriate salt or dilution flow stream. It shall be demonstrated that the sensor calibration can be verified after package seal or that post seal calibration of the sensor by lid removal is an acceptable procedure.

The moisture sensor shall be sealed in the device package or, when specified, in a dummy package of the same type. This sealing shall be done under the same processes, with the same die attach materials and in the same facilities during the same time period as the device population being tested.

The water-vapor content measurement shall be made, at 100°C or below, by measuring the moisture sensor response. Correlation with procedure 1 shall be accomplished before suitability of the sensor for procedure 3 is granted. It shall be shown the package ambient and sensor surface are free from any contaminating materials such as organic solvents which might result in a lower than usual moisture reading.

3.3.1 Failure criteria. A specimen which has a water-vapor content greater than the specified maximum value shall constitute a failure.

Source: https://assist.dla.mil -- Downloaded: 2016-12-03T20:24Z
Check the source to verify that this is the current version before use.

4. Implementation. Suitability for performing method 1018 analysis is granted by the qualifying activity for specific limits and volumes. Method 1018 calibration procedures and the suitability survey are designed to guarantee ±20 percent lab-to-lab correlation in making a determination whether the sample passes or fails the specified limit. Water vapor contents reported either above or below (water vapor content - volume) the range of suitability are not certified as correlatable values. This out of specification data has meaning only in a relative sense and only when one laboratory's results are being compared. The specification limit of 5,000 ppmv shall apply to all package volumes, with the following correction factors permitted, to be used provided they are documented and shown to be applicable:

For package volumes less than .01 cc internal free volume which are sealed while heated in a furnace:

$$C_T = \frac{T_r + 273}{T_s + 273}$$

Where:
C_T = correction factor (temperature)
T_r = room temperature (°C)
T_s = sealing temperature (°C).

For package volumes of any size sealed under vacuum conditions:

$$C_P = \frac{P_s}{P_a}$$

C_P = correction factor (pressure)
P_s = sealing pressure
P_a = atmospheric pressure (pressures may be in Torr or mm Hg).

The correction factor, if used, shall be applied as follows:

Water vapor (corrected) = Water vapor (measured) x C_X; where C_X is the applicable correction factor.

The range of suitability for each laboratory will be extended by the qualifying activity when the analytical laboratories demonstrate an expanded capability. Information on current analytical laboratory suitability status can be obtained by contacting Defense Supply Center, Columbus, ATTN: DSCC-VQE, P.O. Box 3990, Columbus, OH 43216-5000.

5. Summary. The following details shall be specified in the applicable acquisition document:

a. The procedure (1, 2, or 3) when a specific procedure is to be used (see 3).

b. The maximum allowable water-vapor content falling within the range of suitability as specified MIL-PRF-19500.

Source: https://assist.dla.mil -- Downloaded: 2016-12-03T20:24Z
Check the source to verify that this is the current version before use.

METHOD 1033

REVERSE VOLTAGE LEAKAGE STABILITY

1. Purpose. This test method is designed to evaluate the short tem leakage stability of product under reverse bias conditioning. It is not intended to replace, nor does it duplicate the high temperature reverse bias conditioning. The failure mechanisms that are addressed in this test method are not sustained upon the removal of applied bias to the device. As an example; certain semiconductor designs are quite susceptible to unstable reverse leakage due to the presence of Hydrogen in the device. This method can be used to ascertain the susceptibility of a technology to this type of a problem or the effectiveness of countermeasures.

2. Procedure. Condition A: Apply to the device under test (DUT) at room temperature, +25°C,a minimum of 80 percent of the specified V_{cb}, V_{ds}, V_r as applicable. Apply bias and measure and record the leakage current.

Retain uninterrupted bias on the device for 1 hour minimum.

After 1 hour minimum re-measure and record the reverse leakage of the device. Interruption of the applied bias for any reason between the pre and post leakage measurements invalidates the test. Bias shall not be interrupted to make the reverse leakage measurement.

3. Failure criteria. The following shall be used as the pass/fail criteria for this test:

For measured Ir < 100nA	Delta Ir = 100 nA max.
For measured Ir 100 nA < Ir < 1μA	Delta Ir = 200 nA max.
For measured Ir > 1 μA	Delta Ir = Less than 50 percent of initial measurement.

4. Condition B. Sweep the voltage in the BVCEO mode until the breakdown of the device is observed and study the breakdown leakage plot for a minimum of 10 seconds for stability. An unstable plot will be considered any device which exhibits one or more of the following:

a. Collapsing.

b. Leakage increasing.

A device will be considered passing when none of the instability modes are noticed from the list above after period of approximate 10 seconds. The device will be then subjected to a leakage test.

Sweep the voltage of the device to the maximum leakage identified on the applicable slash sheet. Observe the amplitude of the leakage. Leakage is defined as I_{cbo}, I_{ces} or I_{cex} as specified in the applicable detail specification.

After 30 seconds minimum, the maximum change in leakage allowed is as specified for Burn-in in the detail specification.

Perform the breakdown and leakage on the specified number of samples in accordance with the individual specification. One hundred percent must be performed on the entire lot if any device from the sample fails the above tests.

Source: https://assist.dla.mil -- Downloaded: 2016-12-03T20:24Z
Check the source to verify that this is the current version before use.

METHOD 1071.7

HERMETIC SEAL

1. Purpose. The purpose of this test is to determine the hermeticity of semiconductor devices with designed internal cavities.

2. Definitions.

   a. Standard leak rate. Standard leak rate is defined as that quantity of dry air at +25°C in atmospheric cubic centimeters flowing through a leak or multiple leak paths per second when the high-pressure side is at 15 psi (101 kPa) and the low-pressure side is at a pressure of not greater than .0193 psi (133 pA). Standard leak rate shall be expressed in units of atmospheric cubic centimeters per second (atm cm^3/s air).

   b. Measured leak rate. Measured leak rate (R_1) is defined as the leak rate of a given package as measured under specified conditions and employing a specified test medium. Measured leak rate shall be expressed in units of atmospheric cubic centimeters per second (atm cm^3/s of the gas medium used for the test). For purposes of comparison with rates determined by other methods of testing, the measured leak rates must be converted to the equivalent standard leak rates, (converted to air equivalents).

   c. Equivalent standard leak rate. The equivalent standard leak rate (L) of a given package, with a measured leak rate (R_1), is defined as the leak rate of the same package with the same leak geometry, that would exist under the standard leak rate. The equivalent standard leak rate shall be expressed in units of atmospheric cubic centimeters per second (atm cm^3/s) (air).

NOTE: The leak rate measurements are not necessarily performed with a one atmosphere differential, as implied by the standard leak rate. The equivalent conversion represents gas medium only.

3. Test conditions.

   a. Gross leaks. Test conditions A, B, C, D, E, J, K, or L should be specified for gross leaks.

      (1) Test condition A: Radioisotope wet gross leak test (see 4.).

      (2) Test condition B: Radioisotope dry gross leak test (see 5.).

      (3) Test condition C: Liquid (fluorocarbon) gross leak (see 6.).

      (4) Test condition D: Bubble test (see 3b).

      (5) Test condition E: Penetrant dye gross leak (see 8.).

      (6) Test condition J: Weight gain gross leak (see 11.).

      (7) Test condition K: Fluorocarbon vapor detection gross leak (see 12.).

      (8) Test condition L_1: Optical gross leak (see 13).

   b. Gross leaks. Test condition D may be specified when a sensitivity of 1×10^{-3} atm cm^3/s or greater will satisfy reliability requirements. This condition shall not be used for devices that have internal free volumes of less than 1 cm^3.

Source: https://assist.dla.mil -- Downloaded: 2016-12-03T20:24Z
Check the source to verify that this is the current version before use.

c. Fine leak. Test condition G, H, or L should be specified for the fine leak test.

(1) Test condition G: Radioisotope fine leak test (see 9.).

(2) Test conditions H_1 and H_2: Tracer gas leak test (Helium) (see 10.).

(3) Test conditions L_2: Optical fine leak test (see 13.).

d. Obsolete.

e. Fine and gross leak test procedure. Unless otherwise specified by applicable detail specification, tests shall be conducted in accordance with table 1071-I. When specified (see 14.) measurements after test shall be conducted following the leak test procedures. Where bomb pressure specified exceeds the device package capability, alternate pressure, exposure time, and dwell time conditions may be used provided they satisfy the leak rate, pressure, and time relationships which apply and provided no less than 30 psi (207 kPa) bomb pressure is applied in any case, or for condition L_1, a minimum 10 psi differential test pressure is applied.

Fine and gross leak tests shall be conducted in accordance with the requirements and procedures of the specified test condition. Testing order shall utilize only the all-dry gas tests first, followed by any liquid immersion gross leak test (i.e.; the option to use the radioisotope gross and fine leak test conditions B and G_1, may be used together, or in succession, as long as the minimum test requirements are met). Optical gross leak test (L_1) is an all-dry gas test and can be used before any fine leak test. If any other gross leak test is used, (condition A, C, D, E, F, J, or K), the sequence of testing must use the dry gas fine leak test first, followed by the gross leak test except in accordance with 15a. When batch testing (more than one device in the leak detector at one time) is used in performing test condition G, H_1, H_2, and a reject condition occurs it shall be noted as a batch failure. Each device may then be tested individually one time for acceptance if all devices in the batch are retested within one hour after removal from the tracer gas pressurization chamber. For condition G, only, devices may be batch retested for acceptance providing all retesting is completed within one hour after removal from the tracer gas pressurization chamber. For condition K only, devices that are batch tested, and indicate a reject condition, may be retested individually one time using the procedure of 12.2 herein, except that repressurization is not required if the devices are immersed in detector fluid within 20 seconds after completion of the first test, and they remain in the bath until retest.

TABLE 1071-I. Required test sequence.

Volume (cm^3)	Fine leak condition	Gross leak condition
≤0.4	G, H_1, H_2, L_2	A, C, D, E, J 1/, K 2/, L_1
>0.4	G, H_1, H_2, L_2	A, B, C, D, E, K, L_1
>0.4	J 3/	J 3/

1/ Condition J cannot be used for packages whose internal volume is <0.001 cm^3.
2/ Condition D cannot be used for packages whose internal volume is ≤ 1 cm^3.
3/ Condition J may be used as a single test for devices with an internal cavity volume of >0.4 cm^3 provided the specified requirements can be satisfied by a leak rate of 1×10^{-6} atm cm^3/s.

Source: https://assist.dla.mil -- Downloaded: 2016-12-03T20:24Z
Check the source to verify that this is the current version before use.

4. Test condition A, radioisotope wet gross leak test.

4.1 Apparatus. The apparatus required for the seal test shall be as follows:

a. Radioactive tracer gas activation console.

b. Counting equipment consisting of a scintillation crystal, photomultiplier tube, preamplifier, ratemeter, and krypton-85 reference standards. The counting station shall be of sufficient sensitivity to determine through the device wall the radiation level of any krypton-85 tracer gas present within the device. The counting station shall have a minimum sensitivity corresponding to a leak rate of 10^{-9} atm cc/s of krypton-85 and shall be calibrated at least once every working shift using krypton-85 reference standards and following the equipment manufacturer's instruction.

c. A container of sufficient volume to allow the devices to be covered with oil and to be degreased with a suitable solvent.

d. Solutions:

(1) Hydrocarbon vacuum pump oil. The solution shall be kept clean and free of contaminants.

(2) Solvent capable of degreasing the devices.

e. A tracer gas consisting of a mixture of krypton-85 and dry nitrogen. The concentration of krypton-85 in dry nitrogen shall be no less than 100 microcuries per atmospheric cubic centimeter. This value shall be determined at least once each 30 days, following manufacturer's procedure, and recorded in accordance with the calibration requirements of this standard.

4.2 Procedure. The devices shall be immersed in the oil and evacuated to a pressure of 10 torr or less, for 10 minutes, and then pressurized for one hour at 310 kPa (45 psi) minimum. The devices shall be removed from the oil and flushed with solvent to remove all of the surface oil. The devices shall then be placed in the radioisotope pressurization tank, and the tank evacuated to a pressure of 9.72×10^{-3} psi (67 Pa). The devices shall then be pressurized to a minimum of three atmospheres absolute pressure of krypton-85/nitrogen gas mixture for two to five minutes. The gas mixture shall then be evacuated to storage until a pressure of 0.0387 to 0.0483 psi (267 to 333 Pa) maximum exists in the tank. This evacuation shall be completed in two minutes maximum. The tank shall then be filled with air, and the devices immediately removed from the tank and leak tested within 15 minutes after gas exposure, with a scintillation crystal equipped counting station. Any device indicating 1,000 c/m or greater above the ambient background of the counting station shall be considered a gross leak.

4.2.1 Personnel precautions. Government regulations require a license for the possession and use of krypton-85 leak test equipment. These regulations should be followed carefully. The personnel should be properly instructed and monitored in accordance with the licensing requirements.

5. Test condition B, radioisotope dry gross leak. This test shall be only to test devices that internally contain some krypton-85 absorbing medium, such as electrical insulation, organic, or molecular sieve material. This test shall be permitted only if the following requirements are met:

a. A 5 to 10 mil diameter hole shall be made in a representative unit of the devices to be tested.

b. The device shall be subjected to this test condition with a count rate from 200 to 250 counts per minute above ambient background. The count rate shall be made two hours after removal from the activation tank. If the device fails, this test condition may be used, but only for those devices represented by the test unit. If the device does not fail, this test condition shall not be used.

Source: https://assist.dla.mil -- Downloaded: 2016-12-03T20:24Z
Check the source to verify that this is the current version before use.

5.1 Apparatus. Apparatus for this test shall consist of the following:

a. Radioactive tracer gas activation console containing krypton-85/dry nitrogen gas mixture.

b. Counting station with a minimum sensitivity of 12,000 counts per minute per microcurie of krypton-85 tracer gas and a minimum detectable count rate of 100 counts per minute above background level.

c. Tracer gas mixture of krypton-85/dry nitrogen with a minimum allowable specific activity of 100 microcuries per atmospheric cubic centimeter. The specific activity of the krypton-85/dry nitrogen mixture shall be determined on a once-a-month basis as a minimum.

5.2 Procedure. The devices shall be placed in a radioactive tracer gas activation tank and the tank shall be evacuated to a pressure not to exceed 9.72×10^{-3} psi (67 Pa). The devices shall then be subjected to a minimum of 25 psi (173 kPag) of krypton-85/dry nitrogen gas mixture for 2 to 5 minutes. The gas mixture shall then be evacuated to storage until a pressure of 0.0972 psi (670 Pa) maximum exists in the activation tank. This evacuation shall be complete in three minutes maximum. The activation tank shall then be backfilled with air (air wash). The devices shall then be removed from the activation tank and leak tested within 30 minutes after gas exposure with a scintillation-crystal-equipped counting station. Any device indicating 200 counts per minute or greater above the ambient background of the counting station shall be considered a gross leak failure.

5.2.1 Personnel precautions. See 4.2.1.

6. Test condition C, liquid (fluorocarbon) gross leak.

6.1 Apparatus. Apparatus for this test shall consist of the following:

a. A vacuum/pressure chamber for the evacuation and subsequent pressure bombing of devices up to 90 psi (618 kPa) for a maximum of 24 hours.

b. A suitable observation container with provisions to maintain the indicator fluid at a temperature of +125°C ±5°C (+100°C for Germanium transistors with temperature rating of +100°C maximum) and a filtration system capable of removing particles greater than one micrometer in size from the fluid.

c. A magnifier capable of magnifying an object 1.5 to 30 times its normal size (4 to 120 diopters) for observation of bubbles emanating from devices when immersed in the indicator fluid.

d. Sources of type I detector fluids and type II indicator fluids as specified in table 1071-II.

TABLE 1071-II. Physical property requirements of perfluorocarbon fluids. 1/

Property	Type I	Type II	Type III	ASTM test method
Boiling point (°C)	50-95	140-200	50-110	D-1120
Surface tension (dyness/cm) at +25°C		< 20		D-971, D-1331
Density at +25°C (gm/ml)	> 1.6	> 1.6	> 1.6	D-941
Density at +125°C (gm/ml)		> 1.5		D-941
Dielectric strength (volts/mil)	> 300	> 300	> 300	877
Residue (Tgm/gm)	< 50	< 50	< 50	D-2109
Appearance	Clear colorless			N/A

1/ Perfluorocarbons contain no chlorine or hydrogen.

Source: https://assist.dla.mil -- Downloaded: 2016-12-03T20:24Z
Check the source to verify that this is the current version before use.

e. A lighting source capable of producing a collimated beam of at least 161,000 luxes (15,000 foot candles) in air at a distance equal to that which the most distant device in the bath will be from the source. The lighting source shall not require calibration, but shall be placed for best detection of bubbles, without excessive incident or reflective glare being directed toward observer.

f. Suitable calibrated instruments to indicate that test temperatures, pressures, and times are as specified.

g. Suitable fixtures to hold the device(s) in the indicator fluid.

6.2 Procedure. The devices shall be placed in a vacuum/pressure chamber and the pressure reduced to 0.0972 psi (670 Pa) or less and maintained for 30 minutes minimum, except for devices with an internal volume ≥ 0.1 cm^3 this vacuum cycle may be omitted. A sufficient amount of type I detector fluid shall be admitted to cover the devices. When the vacuum cycle is performed, the fluid will be admitted after the minimum 30 minute period but before breaking the vacuum. The devices shall then be pressurized in accordance with table 1071-III. When the pressurization period is complete the pressure shall be released and the devices removed from the chamber without being removed from a bath of detector fluid for greater than 20 seconds. A holding bath may be another vessel or storage tank. When the devices are removed from the bath they shall be dried for 2 minutes ±1 minute in air prior to immersion in type II indicator fluid, which shall be maintained at +125°C ±5°C. The devices shall be immersed with the uppermost portion at a minimum depth of 2 inches (50.80 mm) below the surface of the indicator fluid, one at a time or in such a configuration that a single bubble from a single device out of a group under observation may be clearly observed as to its occurrence and source. Unless rejected earlier, the device shall be observed against a dull, nonreflective black background through the magnifier, while illuminated by the lighting source, from the instant of immersion until expiration of a 30-second minimum observation period.

TABLE 1071-III. Condition C and K pressurization conditions.

Pressure psia (minimum)	Minimum pressurization time (hour)	
	Condition C	Condition K
30	23.5	12
45	8	4
60	4	2
75	2	1
90	1	0.5
105	0.5	N/A

Source: https://assist.dla.mil -- Downloaded: 2016-12-03T20:24Z
Check the source to verify that this is the current version before use.

6.2.1 Failure criteria. A definite stream of bubbles, or two or more bubbles originating from the same point shall be cause for rejection.

6.2.2 Precautions. The following precautions shall be observed in conducting the fluorocarbon gross leak test:

a. Perfluorocarbons fluids shall be filtered through a filter system capable of removing particles greater than one micrometer prior to use. Bulk filtering and storage is permissible. Liquid which has accumulated observable quantities of particulate matter during use shall be discarded or reclaimed by filtration for re-use. Precaution should be taken to prevent contamination.

b. Observation container shall be filled to assure coverage of the device to a minimum of 2 inches (50.80 mm).

c. Devices to be tested shall be free of foreign materials on the surface, including conformal coatings and any markings which may contribute to erroneous test results.

d. Precaution should be taken to prevent operator injury due to package rupture or violent evolution of bomb fluid when testing large packages.

7. Test condition D, bubble test (type II indicator fluid as specified in table 1071-II.) (NOTE: These fluids replace ethylene glycol as a medium for the gross leak bubble test.)

7.1 Apparatus. Apparatus for this test shall consist of the following:

a. A device internal free volume of greater than 1 cm^3.

b. Container of sufficient volume to allow the devices to be covered with solution to a minimum depth of 2 inches (50.80 mm). The container shall have flat sides to minimize reflections and distortions (example of an acceptable container is a battery jar).

c. Liquid of sufficient volume maintained at no less than +125°C ±5°C for the duration of the test.

d. A light source capable of producing a collimated beam of at least 161,000 luxes (15,000 foot candles) in air at a distance equal to that which the most distant device in the bath will be from the source. The lighting source shall not require calibration.

7.2 Procedure. The devices shall be placed in the container of liquid at +125°C, immersed to a minimum depth of 2 inches (50.80 mm) for a minimum of one minute, and observed during the entire immersion period for bubbles or bubbling. Side lighting (see 7.1d) shall be used to facilitate viewing the bubbles, and the devices shall be observed against a black nonreflective background.

7.2.1 Failure criteria. Any device that shows one or more nonreflective attached growing bubbles, one continuous stream, or a succession of two or more from the same point shall be considered a failure.

8. Test condition E, penetrant dye gross leak.

8.1 Apparatus. Apparatus for this test shall consist of the following:

a. Ultraviolet light source with peak radiation at approximately the frequency causing maximum reflection of the dye (3650Å for Zyglo; 4935Å for Flurosecein; 5560 Å for Rhodamine B).

b. Pressure chamber capable of maintaining 104 psi (719 kPa).

c. Solution of fluorescent dye, (such as Rhodamine B, Fluorescein, Dye-check, Zyglo, FL-50 or equivalent), mixed in accordance with the manufacturer's specification.

d. A magnifier capable of magnifying an object 1.5 to 30 times its nominal size (4 to 120 diopters).

Source: https://assist.dla.mil -- Downloaded: 2016-12-03T20:24Z
Check the source to verify that this is the current version before use.

8.2 Procedure. This test shall be permitted only on transparent glass encased devices or for destructive verification of opaque devices. The pressure chamber shall be filled with the dye solution to a depth sufficient to completely cover all the devices. The devices shall be placed in the solution and the chamber pressurized at 104 psi (719 kPa) minimum for three hour minimum. For device packages which will not withstand 105 psi (724 kPa), 60 psi (414 kPa) minimum for 10 hours may be used. The devices shall then be removed and carefully washed, using a suitable solvent for the dye used, followed by an air jet dry. Transparent devices may be examined under magnification capable of magnifying an object up to 1.5 times its normal size (4 diopters) using ultraviolet light source of appropriate frequency for evidence of the dye penetration. For the destructive examination of opaque devices, the devices shall be delidded and examined internally under the magnifier using an ultraviolet light source of appropriate frequency.

8.2.1 Failure criteria. Any evidence of dye in the cavity of the device shall constitute a failure.

8.2.1.1 Opaque devices. After de-lidding or separation of the device (as applicable), any evidence of dye penetration shall be cause for rejection. Area of examination shall be as shown in figures 1071-1 and 1071-2.

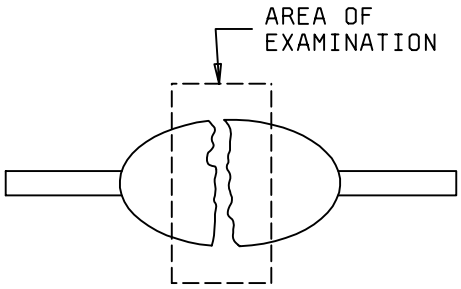

FIGURE 1071-1. Opaque construction.

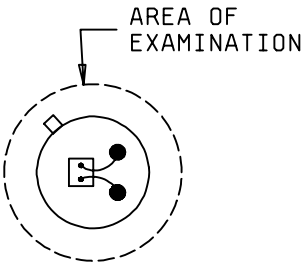

FIGURE 1071-2. Metal can construction.

8.2.1.2 Transparent glass, with large cavity (i.e. S-Bend, C-Bend, or straight-through constructions). Any evidence of dye penetration in the device cavity shall be cause for rejection. Area of examination shall be as shown in figure 1071-3.

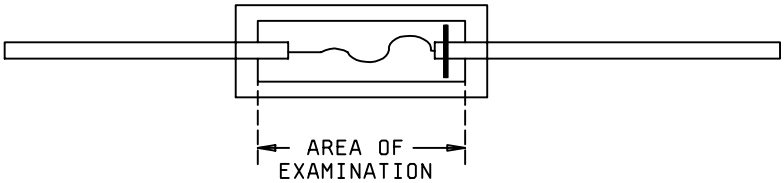

FIGURE 1071-3. Transparent glass or straight through construction.

Source: https://assist.dla.mil -- Downloaded: 2016-12-03T20:24Z
Check the source to verify that this is the current version before use.

8.2.1.3 Transparent glass, double plug construction (-1 and tungsten). Any evidence of dye penetration in the die area shall be cause for rejection. In addition, evidence of dye penetration into a crack, fracture, void, etc., which is closer to the die than 50 percent of the designed seal length shall be rejected. Area of examination shall be as shown in figure 1071-4.

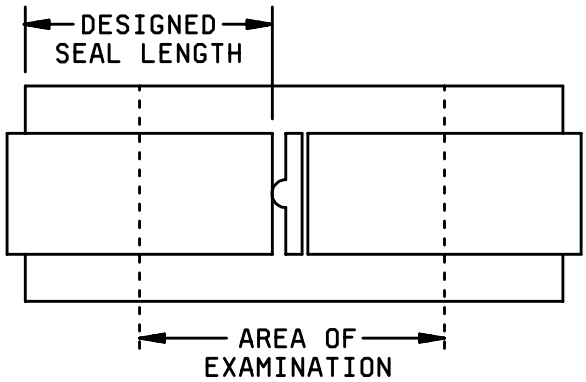

FIGURE 1071-4. Transparent glass double plug construction.

9. Test condition G_1. Radioisotope fine leak.

9.1 Apparatus. Apparatus for this test shall be as in 5.1.

9.2 Activation parameters. The activation pressure and soak time shall be determined in accordance with the following equation:

$$Q_S = \frac{R}{S\,K\,T\,\bar{P}\,t} \quad (1)$$

The parameters of equation (1) are defined as follows:

Q_S = The maximum leak rate allowable, in atm cc/s Kr, for the devices to be tested.

R = Counts per minute above the ambient background after activation if the device leak rate were exactly equal to Q_S. This is the reject count above the background of both the counting equipment and the component, if it has been through prior radioactive leak tests.

S = The specific activity, in microcuries per atmospheric cubic centimeter, of the krypton-85 tracer gas in the activation system.

K = The overall counting efficiency of the scintillation crystal in counts per minute per microcurie of krypton-85 in the internal void of the specific component being evaluated. This factor depends upon component configuration and dimensions of the scintillation crystal. The counting efficiency shall be determined in accordance with 9.3.

T = Soak time, in hours, that the devices are to be activated.

$\bar{P}$ = $P_e2 - P_i2$, where P_e is the activation pressure in atmospheres absolute, and P_i is the original internal pressure of the devices in atmospheres absolute. The activation pressure (P_e) may be established by specification or if a convenient soak time (T) has been established, the activation pressure (P_e) can be adjusted to satisfy equation (1).

Source: https://assist.dla.mil -- Downloaded: 2016-12-03T20:24Z
Check the source to verify that this is the current version before use.

t = Conversion of hours to seconds and is equal to 3,600 seconds per hour.

NOTE: The complete version of equation (1) contains a factor $(P_O^2 - (\Delta P)^2)$ in the numerator which is a correction factor for elevation above sea level. P_O is sea level pressure in atmospheres absolute and ΔP is the difference in pressure, in atmospheres between the actual pressure at the test station and sea level pressure. For the purpose of this test method, this factor has been dropped.

9.3 Determination of counting efficiency (k). The counting efficiency (k) of equation (1) shall be determined as follows:

a. Five representative units of the device type being tested shall be tubulated and the internal void of the device shall be backfilled through the tubulation with a known volume and known specific activity of krypton-85 tracer gas and the tubulation shall be sealed off.

b. The counts per minute shall be directly read in the shielded scintillation crystal of the counting station in which the devices are read. From this value, the counting efficiency, in counts per minute per microcurie, shall be calculated.

9.4 Evaluation of surface sorption. All device encapsulations consisting of glass, metal, and ceramic or combinations thereof, including coatings and external sealants, shall be evaluated for surface sorption of krypton-85 before establishing the leak test parameters. Representative samples of the questionable material shall be subjected to the predetermined pressure and time conditions established for the device configuration as specified by 9.2. The samples shall then be counted every 10 minutes, with count rates noted, until the count rate becomes asymptotic with time. (This is the point in time at which surface sorption is no longer a problem.) This time lapse shall be noted and shall determine the "wait time" specified in 9.5.

9.5 Procedure. The devices shall be placed in the radioactive tracer gas activation tank. The activation chamber may be partially filled with inert material to reduce pumpdown time. The tank shall be evacuated to 9.7×10^{-3} psi (67 Pa). The devices shall be subjected to a minimum of 29 psi (203 kPa) absolute pressure of krypton-85/dry nitrogen mixture of 12 minutes. Actual pressure and soak time shall be determined in accordance with 9.2. The R value in counts per minute shall not be less than 600 above background. The krypton-85/dry nitrogen gas mixture shall be evacuated to storage until 9.7×10^{-3} psi (67 Pa) to 0.039 psi (270 Pa) pressure exists in the activation tank. The storage cycle shall be completed in three minutes maximum as measured from the end of the activation cycle or from the time the activation tank pressure reaches 60 psi (414 kPa) if a higher bombing pressure is used. The activation tank shall then immediately be backfilled with air (air wash). The devices shall then be removed from the activation tank and leak tested within one hour after gas exposure with a scintillation-crystal-equipped counting station. Device encapsulations that come under the requirements of 9.4 shall be exposed to ambient air for a time not less than the "wait time" determined by 9.4. In no case will the time between removal from the activation chamber and test exceed one hour. This air exposure shall be performed after gas exposure but before determining leak rate with the counting station. Device encapsulations that do not come under the requirements of 9.4 may be tested without a "wait time". (The number of devices removed from pressurization for leak testing shall be limited such that the test of the last device can be completed within one hour.)

Source: https://assist.dla.mil -- Downloaded: 2016-12-03T20:24Z
Check the source to verify that this is the current version before use.

The actual leak rate of the component shall be calculated with the following equation:

$$Q = \frac{(\text{Actual readout in net counts per minute}) \times Q_S}{R} \quad (2)$$

Where Q = Actual leak rate in atm cc/s, and Q_S and R are defined in 9.2.

NOTE: CAUTION: Discharge of krypton 85 into the atmosphere must not exceed limits imposed by local and Federal regulations.

9.5.1 Failure criteria. Unless otherwise specified, devices that exhibit a leak rate equal to or greater than the test limits of table 1071-IV shall be considered as failures.

NOTE: CAUTION: Devices which do not exhibit a leak rate sufficient to fail seal test, may retain radioactive tracer gas in sufficient concentration to cause soft errors in complex, small geometry devices.

TABLE 1071-IV. Test limits for radioisotope fine leak method.

Volume of package (cc)	Q_S
< 0.01	1×10^{-8}
≥ 0.01, ≤ 0.4	5×10^{-8}
> 0.4	5×10^{-7}

9.5.2 Personnel precautions. See 4.2.1.

10. Test condition H_1 or H_2 tracer gas (H_e) fine leak. Test condition H_1 is a "fixed" method with specified conditions in accordance with table 1071-V that will ensure the test sensitivity necessary to detect the required measured leak rate (R_1). Test condition H_2 is a "flexible" method that allows the variance of test conditions in accordance with the formula of 10.2.1.2 to detect the specified equivalent standard leak rate (L) at a predetermined leak rate (R_1).

10.1 Apparatus. Apparatus required for test conditions H_1 and H_2 shall consist of suitable pressure and vacuum chambers and a mass spectrometer-type leak detector properly calibrated for a helium leak rate sensitivity sufficient to read measured helium leak rates of 1×10^{-9} atm cm^3/s and greater. The volume of the chamber used for leak rate measurement should be held to the minimum practical, since this chamber volume has an adverse effect on sensitivity limits. The leak detector indicator shall be calibrated using a diffusion-type calibrated standard leak at least once every working shift.

10.2 Procedure applicable to "fixed" and "flexible" methods. The completed devices(s) shall be placed in a sealed chamber which is then pressurized with a tracer gas of 100 +0, -5 percent helium for the required time and pressure. The pressure shall then be relieved (an optional air nitrogen wash may be applied) and each specimen transferred to another chamber or chambers which are connected to the evacuating system and a mass-spectrometer-type leak detector. When the chamber(s) is evacuated, any tracer gas which was previously forced into the specimen will thus be drawn out and indicated by the leak detector as a measured leak rate (R_1). (The number of devices removed from pressurization for leak testing shall be limited such that the test of the last device can be completed within 60 minutes for test condition H_1 or within the chosen value of dwell time t_2 for test condition H_2.)

Source: https://assist.dla.mil -- Downloaded: 2016-12-03T20:24Z
Check the source to verify that this is the current version before use.

10.2.1 Evaluation of surface sorption. All device encapsulations consisting of glass, metal, and ceramic or combinations thereof including coatings and external sealants, shall be evaluated for surface sorption of helium before establishing the leak test parameters. Representative specimens of the questionable devices should be opened and all parts of each device as a unit shall be subjected to the predetermined pressure and time conditions established for the device configuration as specified in table 1071-V and 10.2.1.2. The measured leak rate for each device shall be monitored and the lapsed time shall be determined for the indicated leak rate to fall to ≤0.5 R_1 as specified in table 1071-V for test condition H_1 or as predetermined for test condition H_2. The average of the lapsed time following the release of pressure will determine the minimum usable dwell time. Note that the sensitivity of measurement increases as this background indicated-leak-rate decreases relative to the R_1 reject level. Alternately, whole (unopened) specimens of the questionable devices shall be subjected to the same process; then, the shorted value of lapsed time so obtained will determine the minimum dwell time. The fixed method will not be used if the consequent dwell time exceeds the value specified in table 1071-V. It is noted that sorption may vary with pressure and time of exposure so that some trial may be required before satisfactory exposure values are obtained.

10.2.1.1 Test condition H_1, fixed method. The device(s) shall be tested using the appropriate conditions specified in table 1071-V for the internal cavity volumes of the package under test. The t_1 is the time under pressure and time t_2 is the maximum time allowed after the release of pressure before the device shall be read. The fixed method shall not be used if the maximum standard leak rate limit given in the detail specification is less than the limits specified herein for the flexible method.

TABLE 1071-V. Fixed conditions for test condition H_1.

Volume of package (cm^3)	Bomb condition			R_1 reject limit (atm cm^3/s)
	kPa ±15 (psi) ±2	Exposure time in hours (t_1) (+1.0 - 0.0)	Maximum dwell time (hour)	
< 0.05	517 (75)	2	1	5×10^{-8}
> 0.05 < 0.5	517 (75)	4	1	5×10^{-8}
> 0.5 < 1.0	310 (45)	2	1	1×10^{-7}
> 1.0 < 10.0	310 (45)	5	1	5×10^{-8}
> 10.0 < 20.0	310 (45)	10	1	5×10^{-8}

Source: https://assist.dla.mil -- Downloaded: 2016-12-03T20:24Z
Check the source to verify that this is the current version before use.

10.2.1.2 Test condition H_2, flexible method. Values for bomb pressure, exposure time, and dwell time shall be chosen such that actual measured tracer gas leak rate (R_1) readings obtained for the DUTs (if defective) will be greater than the minimum detectable leak rate capability of a mass spectrometer. The devices shall be subjected to a minimum of 29 psi (203 kPa) of helium atmosphere. The chosen values of pressurization and time of pressurization, in conjunction with the value of the internal volume of the device package to be tested and the maximum equivalent standard leak rate (L) limit as specified in 10.2.2, shall be used to calculate the measured leak rate (R_1) limit using the following formula:

$$R_1 \quad \frac{2.69\,L\;P_e}{P_o}\left[1 - \exp\left(-\frac{2.69\,L}{P_o\;V}\bullet t_1\right)\right]\exp\left(-\frac{2.69\,L}{P_o\;V}\bullet t_2\right) \qquad (3)$$

Where: R_1 = The measured leak rate of tracer gas (H_e) through the leak in atm cm^3/s.
L = The equivalent standard leak rate in atm cm^3/s.
P_e = The pressure of exposure in atmospheres absolute.
P_0 = 1 standard atmosphere.
t_1 = The time of exposure to P_e in seconds.
t_2 = The dwell time between release of pressure and leak detection in seconds.
V = The internal volume of the device package cavity in cubic centimeters.

The minimum detectable leak rate shall be determined as in 10.2.1 and shall be taken as the indicated value corresponding to a lapsed time $t_0 < t_2$. The lapsed time t_0 shall be taken as the minimum usable dwell time, and leak testing shall be accomplished in the interval between t_0 and t_2. Alternately, pressurization parameters may be chosen from the fine leak approximate solution of equation (3) for $L < 1 \times 10^{-5}$ as

$$L = \frac{P_o}{2.69}\left(\frac{R_1\;V}{P_e\;t_1}\right)^{1/2} \qquad (4)$$

with a graphical representation given on figure 1071-5. If chosen dwell time t_2 is greater than 60 minutes, equation (2) shall be used to determine an R_1 value which will assure a maximum detectable standard leak rate large enough to overlap with the selected gross leak test condition. Alternately, the largest detectable leak rate L as a function of dwell time may be obtained from the approximate solution

$$L\ \max = \frac{P_o\;V}{2.69\;t_2}\;1n\left(\frac{2.69\,L\;P_e}{P_o\;R_1}\right) \qquad (5)$$

with graphical representation given on figure 1071-6. In each case (equations (4) and (5)) R_1 shall be taken large compared to the minimum detectable value. 1/

1/ From "Standard Recommended Practices for Determining Hermeticity of Electron Devices with a Helium Mass Spectrometer Leak Detector," ASTM Designation F134, Annual book of ASTM Standards, Pt. 43 November 1980.

Source: https://assist.dla.mil -- Downloaded: 2016-12-03T20:24Z
Check the source to verify that this is the current version before use.

10.2.2 Failure criteria. Unless otherwise specified, devices with an internal cavity volume of 0.01 cm^3 or less shall not be accepted if the equivalent standard leak rate (L) exceeds 5 x 10^{-8} atm cm^3/s. Devices with an internal cavity volume greater than 0.01 cm^3 and equal to or less than 0.5 cm^3 shall not be accepted if the equivalent standard leak rate (L) exceeds 1 x 10^{-7} atm cm^3/s. Devices with an internal cavity volume greater than 0.5 cm^3 shall not be accepted if the equivalent standard leak rate (L) exceeds 1 x 10^{-6} atm cm^3/s.

11. Test condition J, weight gain gross leak.

11.1 Apparatus. Apparatus for this test shall consist of the following:

a. A vacuum/pressure chamber for the evacuation and subsequent pressure bombing of devices up to 90 psi (618 kPa) for up to 10 hours.

b. An analytical balance capable of weighing the devices accurately to 0.1 milligram.

c. A source of type III detector fluid as specified in table 1071-II.

d. A filtration system capable of removing particles greater than one micrometer in size from the fluid.

e. Suitable calibrated instruments to measure test pressures and time.

f. A suitable solvent.

11.2 Procedure. The devices shall be cleaned by placing them in a container of a suitable solvent at +25°C and allowed then to soak for two minutes minimum. The devices shall then be removed and placed in an oven at +125°C ±5°C for one hour minimum, after which they shall be allowed to cool to room ambient temperature. Each device shall be weighed and the initial weight recorded or the devices may be categorized into cells as follows: Devices having a volume of ≤0.01 cm^3 shall be categorized in cells of 0.5 milligram increments and devices with volumes >0.01 cm^3 shall be categorized in cells of 1.0 milligram increments. The devices shall be placed in a vacuum/pressure chamber and the pressure reduced to 0.0967 psi (667 Pa) and maintained for one hour except that for devices with an internal cavity volume ≥0.1 cm^3, this vacuum cycle may be omitted. A sufficient amount of type III detector fluorocarbon fluid shall be admitted to the pressure chamber to cover the devices. When the vacuum cycle is performed, the fluid shall be admitted after the one hour period but before breaking the vacuum. The devices shall then be pressurized to 75 psi (517 kPa) except that 618 kPa (90 psia) shall be used when the vacuum has been omitted. The pressure shall be maintained for two hours minimum. If the devices will not withstand the 75 psi (517 kPa) test pressure, the pressure may be lowered to 45 psi (310 kPa) with the vacuum cycle and pressure maintained for 10 hours minimum. Upon completion of the pressurization period, the pressure shall be released and the devices removed from the pressure chamber and retained in a bath of the fluorocarbon fluid. When the devices are removed from the fluid they shall be air dried for 2 minutes ±1 minute prior to weighing. The devices shall be transferred singly to the balance and the weight or weight category of each device determined. All devices shall be tested within four minutes following removal from the fluid. The delta weight shall be calculated from the record of the initial weight and the post weight of the device. Devices which were categorized shall be separated into two groups, one of which shall be the devices which shifted one cell or less, and the other devices which shifted more than one cell.

11.3 Failure criteria. A device shall be rejected if it gains 1.0 milligram or more and has an internal volume of ≤0.01 cm^3 and 2.0 milligrams or more if the volume is >0.01 cm^3. If the devices are categorized, any device which gains enough weight to cause the device to shift by more than one cell shall be considered a reject. A device which loses weight of an amount which, if gained, would cause the device to be rejected may be retested after it is baked at +125°C ±5°C for a period of 8 hours minimum.

Source: https://assist.dla.mil -- Downloaded: 2016-12-03T20:24Z
Check the source to verify that this is the current version before use.

12. Test condition K, fluorocarbon vapor detection.

12.1 Apparatus. Apparatus for this test shall consist of:

a. A vacuum/pressure chamber for the evacuation and subsequent pressure bombing of devices up to 90 psi (620 kPa) for up to 12 hours.

b. A fluorocarbon vapor detection system capable of detecting vapor quantities equivalent to 0.28 milligram of type I fluid.

c. A source of type I detector fluid specified in table 1071-II.

d. Suitable calibrated instruments to indicate that test, purge times, and temperatures are as specified. The detection system shall be calibrated at least once each shift when production occurs by introducing 1 microliter of type I detector fluid into the test chamber. The resulting reading shall be adjusted in accordance with the manufacturer's instructions.

e. The vapor detector used for condition K shall be calibrated at least once each working shift using a type I fluid calibration source, and following the manufacturer's instructions.

12.2 Procedure. The devices shall be placed in a vacuum/pressure chamber and the pressure reduced to 5 torr or less and maintained for 30 minutes minimum. A sufficient amount of type I detector fluid shall be admitted to the pressure chamber to cover the devices. The fluid shall be admitted after the 30 minute vacuum period but before breaking the vacuum. The devices shall then be pressurized and maintained in accordance with table 1071-III. Upon completion of the pressurization period, the pressure shall be released, the devices removed from the pressure chamber without being removed from the detector fluid for more than 20 seconds and then retained in a bath of fluorocarbon fluid. When the devices are removed from the fluid they shall be air dried for a minimum of 20 seconds and a maximum of 5 minutes prior to the test cycle. If the type I detector fluid has a boiling point of less than +80°C, the maximum drying time shall be 3 minutes. The devices shall then be tested with a fluorocarbon vapor detection system that is calibrated in accordance with 12.1. "Purge" time shall be in accordance with table 1071-VI. Test time shall be a minimum of 3.5 seconds unless the device is rejected earlier. The system's purge and test chambers shall be at a temperature of +125°C ±5°C. Test time shall be 2.5 seconds minimum with the purge and test chambers at a temperature of +150°C ±5°C.

NOTE: Test temperature shall be measured at the chamber surface that is in contact with the DUT.

12.3 Failure criteria. A device shall be rejected if the detector instrumentation indicates more than the equivalent of 0.28 milligrams of type I detector fluid in accordance with table 1071-II.

TABLE 1071-VI. Purge time.

Package with internal free volume (cm^3)	Purge time at +125°C ±5°C (seconds)
≤0.01	≤5
≥0.01 ≤0.10	≤9
≥0.1	≤13

NOTE: Purge time shall be defined as the total time the device is heated prior to entering the test mode. Maximum purge time can be determined by cycling a device with a .02 inch to .05 inch (0.51 mm to 1.27 mm) hole and measuring the maximum purge time that can be used without permitting the device to escape detection.

Source: https://assist.dla.mil -- Downloaded: 2016-12-03T20:24Z
Check the source to verify that this is the current version before use.

13. Test condition L_1 or L_2 - optical gross or gross/fine leak.

13.1 Apparatus:

a. An optical inspection station capable of evacuation and/or pressurization, and subsequent detection of package lid deformation.

b. Suitable calibration instrumention to indicate test results, times and pressures are as specified.

13.2 Lid stiffness. Test condition L_1 and L_2 are valid only for packages with thin lids (thickness < 0.025 typically for metallic lids). The test sensitivity is related to the extent of deformation of the lid due to the specific pressure change and the test time used. For a specific lid material ad size the following formula must be met:

For condition L_1: $R^4 / E T^3 > 1.0 \times 10^{-4}$ (1).

For condition L_2: $R^4 / E T^3 > 1.0 \times 10^{-3}$ (2).

Where: R = The minimum width of free lid (inside braze or cavity dimension in inches).
E = The modulus of elasticity of the lid material.
Aluminum: $E = 10 \times 10^6$ lb/in^2.
Kovar: $E = 20 \times 10^6$ lb/in^2.
Ceramic: $E = 60 \times 10^6$ lb/in^2.
T = The thickness of the lid (inches).

13.3 Leak sensitivity. The optical leak test shall be performed with a test pressure (P_o) and time (t), which will provide the leak rate sensitivity required. The leak rate sensitivity is provided by the following equation:

$L = (-V_o / k_2 t) \ln(1 - dY_t / P_o L_o)$.

Where: L = The leak rate sensitivity of the test (atm-cc/sec).
V_o = The volume of the package cavity (in^3).
k_2 = The leak test gas constant (air = 1.0, He = 2.67).
t = The test duration time (seconds).
dY_t = The measured deformation of the package lid (inches).
P_o = The chamber pressure during the test (psig).
L_o = The lid stiffness constant calculated from the package dimensions (inch/psi).

13.4 Test condition L_1 - optical gross leak. The completed device(s) shall be placed in the sealed test chamber. The optical interferometer shall be set to observe the package lid. The chamber shall then be evacuated while the deformation of the lid is being observed with the optical interferometer. The deformation of the lid with pressure change, and the lack of continued deformation of the lid with reduced pressure held for time t_1 (or equivalent procedure), will be observed for each package in the field of view simultaneously.

13.4.1 Failure criteria. A device shall be rejected if the optical interferometer did not detect deformation of the lied as the chamber pressure was initially changed, or if the interferometer detects the lid deforming as the chamber pressure is held constant (or equivalent procedure).

13.5 Test condition L_2 - optical gross/fine leak. The completed device(s) shall be placed in the sealed test chamber. The optical interferometer shall be set to observe the package lid. The chamber shall then be evacuated while the deformation of the lid is being observed with the optical interferometer. The deformation of the lid with pressure change, and the lack of continued deformation of the lid with reduced pressure held for time t_1 (or equivalent procedure), will be observed for each package in the field of view simultaneously. The sealed test chamber is then pressurized with Helium gas to no more than 2 atmospheres. The lack of deformation of the lid is then observed with an optical interferometer to time t_2 (or equivalent procedure).

Source: https://assist.dla.mil -- Downloaded: 2016-12-03T20:24Z
Check the source to verify that this is the current version before use.

13.5.1 Failure criteria. A device shall be rejected for any of the three following criteria: If the interferometer did not detect deformation of the lid as the chamber pressure was initially changed; or, if the interferometer detects the lid deforming form the package leaking its entrapped internal pressure during time t_1 as the pressure is held constant (or equivalent procedure); or, if the interferometer detects the lid deforming from the package leaking in the pressurized Helium gas during time t_2 as the pressure is held constant (or equivalent procedure).

14. Summary. The following conditions shall be specified in the applicable detail specification:

a. Test condition letter when a specific test is to be applied (see 3.).

b. Accept or reject leak rate for test conditions G, H_1, or H_2 when other than the accept or reject leak rate specified herein applies (see 9.5.1, 10.2.1.1, and 10.2.2).

c. Where applicable, measurements after test (see 3.).

d. Retest acceptability for test conditions G and H (see 9.). For K, see 3e.

e. Order of performance of fine and gross if other than fine followed by gross (see 3.).

15. Notes.

a. The fine leak test shall be performed first if condition A, B, or E is used for gross leak. Gross leak may be performed prior to fine leak if condition C, D, J, K, or L is used for gross leak and provided that the vapor pressure of the fluorocarbon material used in condition C, J, and K (which may be inside the device) is greater than 59 psi (406 kPa), T_A = +125°C. The devices shall be subjected to a bake at this temperature for a minimum of one hour prior to performing the fine leak test. This sequence should be true regardless of whether the leak tests are part of a screening sequence or are included as group B or group C requirements.

b. For test conditions A through E, K, and L_1, the maximum allowable leak rate should not be specified because these tests are "go"/"no-go" type tests that do not provide an indication of actual leak rate. (Although test conditions A, B, K, and L_1 have a definite quantitative measurement to be met, they are still considered "go"/"no-go" tests.)

c. When retesting devices to test conditions G and H, the history of device exposure to helium and krypton-85, including dates, backfilling performed, tracer gas concentrations, pressure, and time exposed, should be known in order to ensure reliable results.

Source: https://assist.dla.mil -- Downloaded: 2016-12-03T20:24Z
Check the source to verify that this is the current version before use.

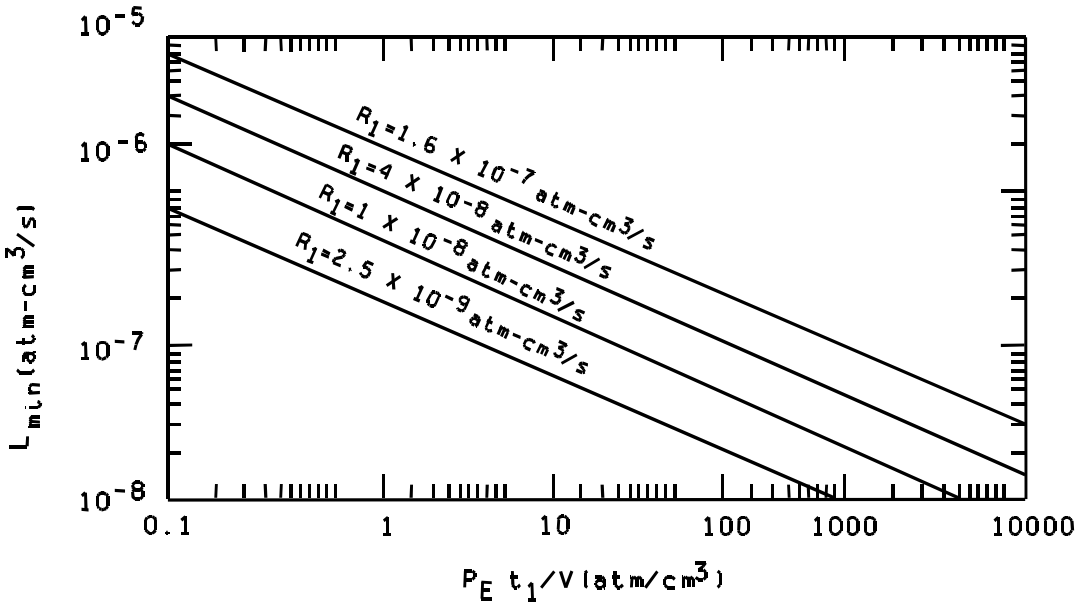

Reject value of equivalent standard leak rate as a function of pressurization conditions and indicated leak rate as computed from the approximate solution, for small leaks where dwell time t_2 is not a significant factor. The reject level R_2 shall be taken larger relative to the minimum detectable R value.

FIGURE 1071-5. Smallest detectable leak.

Source: https://assist.dla.mil -- Downloaded: 2016-12-03T20:24Z
Check the source to verify that this is the current version before use.

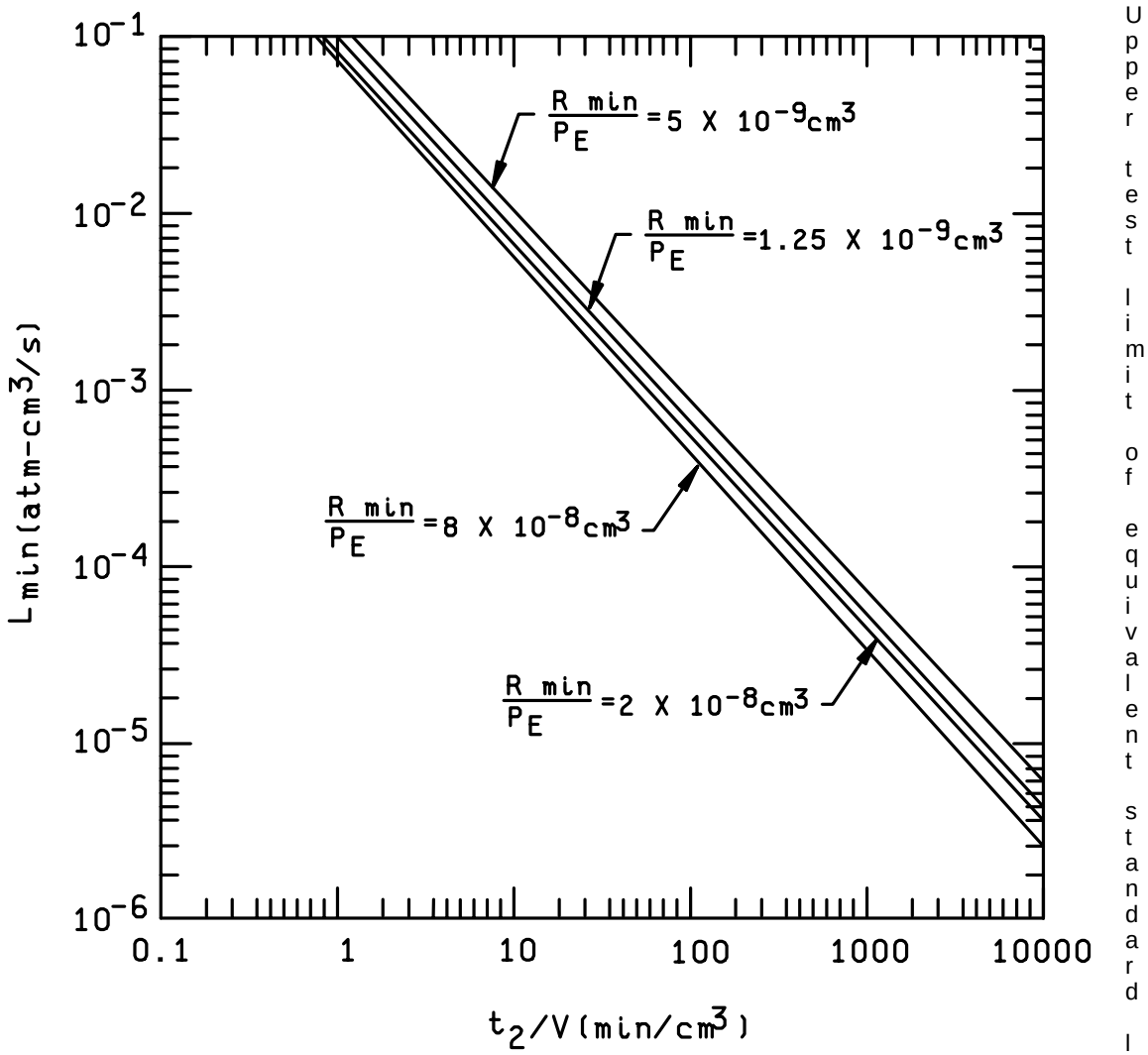

Upper test limit of equivalent standard leak rate as a function of dwell time, pressurization, and indicated leak rate as computed from the approximate solution, (e.g., for larger leaks where internal pressurization is complete).

FIGURE 1071-6. Largest detectable leak.

Source: https://assist.dla.mil -- Downloaded: 2016-12-03T20:24Z
Check the source to verify that this is the current version before use.

METHOD 2069.2

PRE-CAP VISUAL, POWER MOSFET'S

1. Purpose. The purpose of this test is to verify the construction and quality of workmanship in the assembly process to the point of pre-cap inspection. These various inspections and tests are intended to verify compliance with the requirements of the applicable specification.

2. Apparatus. The apparatus for this inspection shall consist of the following:

a. Optical equipment capable of the specified magnification(s).

b. Adequate fixturing for handling the devices being inspected without causing damage.

c. Adequate covered storage and transportation containers to protect devices from mechanical damage and environmental contamination.

d. Any visual standards (e.g., drawings, photographs) necessary to enable the inspector to make objective decisions as to the acceptability of devices being inspected.

3. Procedure.

3.1 General. The devices shall be examined in a suitable sequence of observations with the specified magnification range to determine compliance with the requirements of this document and the applicable specification.

a. Sequence of inspection. The order in which criteria are presented is not a required order of inspection and may be varied at the discretion of the manufacturer.

b. Inspection control. Within the time interval between visual inspection and preparation for sealing, devices shall be stored in a controlled environment (an environment in which air-borne particles and relative humidity are controlled). The use of a positive pressure inert gas environment, such as dry nitrogen, shall satisfy the requirement of storing in a controlled environment. Unless a cleaning operation is performed prior to sealing, devices inspected in accordance with this specification shall be inspected in a class 100,000 environment in accordance with FED-STD-209. The maximum allowable relative humidity shall not exceed 65 percent. Devices shall be in clean covered containers when transferred through any uncontrolled environment.

c. Magnification. Inspection shall be performed with either a monocular, binocular or stereo microscope and the inspection performed with any appropriate angle, with the device under suitable illumination. Magnification shall be performed within the range of 3X to 100X. All criteria of this specification shall be met for the full range of magnification.

Source: https://assist.dla.mil -- Downloaded: 2016-12-03T20:24Z
Check the source to verify that this is the current version before use.

3.2 Bonding inspection (low magnification). This inspection and criteria shall be the required inspection for the bond type(s) and location(s) to which they are applicable when viewed from above (see figures 2069-1 and 2069-2). (Wire tail is not considered part of the bond when determining physical bond dimensions.) No device shall be acceptable which exhibits any of the following defects.

3.2.1 Gold ball bonds.

a. Gold ball bonds where the ball bond diameter is less than 2X or greater than 5X the bonding wire diameter.

b. Gold ball bonds where the wire exit is not completely within the periphery of the ball.

c. Gold ball bonds where the exiting wire is not within boundaries of the bonding pad.

d. Any visible intermetallic formation at the periphery of any gold ball bond.

3.2.2 Wedge bonds.

a. Ultrasonic/thermasonic wedge bonds that are less than 1.2 times or greater than 3.0 times the wire diameter in width, or are less than 1.5 times or greater than 3.0 times the wire diameter in length, before cutoff, as viewed from above.

b. Thermocompression wedge bonds that are less than 1.2 times or greater than 3.0 times the wire diameter in width or are less than 1.5 times or greater than 3.0 times the wire diameter in length.

3.2.3 Tailless bonds (crescent).

a. Tailless bonds that are less than 1.2 times or greater than 5.0 times the wire diameter in width, or are less than 0.5 times or greater than 3.0 times the wire diameter in length.

b. Tailless bonds where the bond impression does not cover the entire width of the wire.

3.2.4 General (gold ball, wedge and tailless). As viewed from above, no device shall be acceptable which exhibits any of the following defects:

a. Bonds on the die where less than 75 percent of the bond is within the unglassivated bonding pad area (except where due to geometry, the bonding pad is smaller than the bond, the criteria shall be 50 percent).

b. Wire bond tails that extend over and make contact with any metallization not covered by glassivation and not connected to the wire.

c. Wire bond tails that exceed two wire diameters in length at the die bonding pad or four wire diameters in length at the package or post.

d. Bonds on the package post that are not bonded entirely on the flat surface of the post top.

Source: https://assist.dla.mil -- Downloaded: 2016-12-03T20:24Z
Check the source to verify that this is the current version before use.

e. A bond on top of another bond, bond wire tail, or residual segment of lead wire. An ultrasonic wedge bond alongside a previous bond where the observable width of the first bond is reduced less than .25 mil is considered acceptable.

f. Bonds placed so that the separation between bond and adjacent unglassivated die metallization not connected to it, is less than 1.0 mil.

g. Rebonding.

h. Gold bonds where less than 50 percent of the bond is located within an area that is free of eutectic melt.

3.2.5 Internal lead wires. This inspection and criteria shall be required inspection for the location(s) to which they are applicable when viewed from above. No device shall be acceptable that exhibits any of the following defects:

a. Any wire that comes closer than one wire diameter to unglassivated operating metallization, another wire (common wires excluded), package post, unpassivated die area of opposite polarity, or any portion of the package of opposite polarity including the plane of the lid to be attached (except by design, but in no case should the separation be less than 0.25 mil). (Within a 5.0 mil spherical radial distance from the perimeter of the bond on the die surface, the separation shall be greater than 1.0 mil.)

b. Nicks, tears, bends, cuts, crimps, scoring, or neckdown in any wire that reduces the wire diameter by more than 25 percent, except in bond deformation area.

c. Missing or extra lead wires.

d. Bond lifting or tearing at interface of pad and wire.

e. Any wire which runs from die bonding pad to package post and has no arc or stress relief.

f. Wires which cross other wires, except common connectors, except by design, in which case the clearance shall be 1.0 mil minimum.

g. Wire(s) not in accordance with bonding diagram (unless allowed in design documentation, for tuning purposes).

h. Kinked wires (an unintended sharp bend) with an interior angle of less than 90 degrees or twisted wires to an extent that stress marks appear.

i. Wire (ball bonded devices) not within 10 degrees of the perpendicular to the surface of the chip for a distance of greater than 0.5 mil before bending toward the package post or other termination point.

Source: https://assist.dla.mil -- Downloaded: 2016-12-03T20:24Z
Check the source to verify that this is the current version before use.

3.3 Package conditions (low magnification). No device shall be acceptable which exhibits any of the following defects.

3.3.1 Foreign material on die surface. All foreign material or particles may be blown off with a nominal gas blow (approximately 20 psig) or removed with a soft camel hair brush. The device shall then be inspected for the following criteria:

a. Loosely attached conductive particles (conductive particles which are attached by less than one-half of their largest dimension) that are large enough to bridge the narrowest unglassivated active metal spacing (silicon chips or any opaque material shall be included as conductive particles).

b. Liquid droplets, chemical stains, or photoresist on the die surface that bridge any combination of unglassivated metallization or bare silicon areas, except for unused cells.

c. Ink on the surface of the die that covers more than 25 percent of a bonding pad area (or interferes with bonding) or that bridges any combination of unglassivated metallization or bare silicon areas, except for unused cells.

3.3.2 Die mounting.

a. Die to header mounting material which is not visible around at least three sides or 75 percent of the die perimeter. Wetting criteria is not required if the devices pass an approved die attached evaluation test.

b. Any balling of the die mounting material which does not exhibit a fillet when viewed from above.

c. Any flaking of the die mounting material.

d. Any die mounting material which extends onto the die surface or extends vertically above the top surface of the die and interferes with bonding.

3.3.3 Die orientation.

a. A die which is not oriented or located in accordance with the applicable assembly drawing of the device.

b. Die is visibly tipped or tilted (more than 10 degrees) with respect to the die attach surface.

3.3.4 Internal package defects (low magnification inspection) (applicable to headers, bases, caps, and lids). As an alternative to 100 percent visual inspection of lids and caps in accordance with the criteria of 3.3.1a, the lids or caps may be subjected to a suitable cleaning process and quality verification procedure approved by the qualifying activity, provided the lids or caps are subsequently held in a controlled environment until capping or preparation for seal.

a. Any header or post plating which is blistered, flaked, cracked, or any combination thereof.

b. Any conductive particle which is attached by less than one-half of the longest dimension.

c. A bubble or a series of interconnecting bubbles in the glass surrounding the pins which are more than one-half the distance between the pin and body or pin-to-pin.

d. Header posts which are severely bent.

e. Any glass, die, or other material greater than one mil in its major dimension which adheres to the flange or side of the header and would impair sealing.

f. Any stain, varnish, or header discoloration which appears to extend under a die bond or wire bond.

Source: https://assist.dla.mil -- Downloaded: 2016-12-03T20:24Z
Check the source to verify that this is the current version before use.

g. For isolated stud packages:

(1) Any defect or abnormality causing the designed isolating paths between the metal island to be reduced to less than 50 percent of the design separation.

(2) A crack or chip-out in the substrate.

3.3.5 Carrier defects ((e.g., BeO, alumina) substrate).

a. Any chip-out in the carrier material.

b. Carrier metallization which is smeared or is obviously not uniform in metallization design pattern to the extent that there is less than 50 percent of the original design separation, or 0.5 mil whichever is less, between operating pads, paths, lid mounting metallization, edges, or any combination thereof.

c. Any crack in the BeO or operating metallization that would affect hermetic seal or die mounting metallization. (Tooling marks or cold form interface lines are not cracks and are not cause for rejection.)

d. Any metallization lifting, peeling, or blistering (on the carrier surface).

e. Any attached conductive foreign material which bridges any combination of metallization paths, leads, or active circuit elements.

f. A scratch or void in the metallization which exposes the substrate anywhere along its length and leaves less than 75 percent of the original metal width undisturbed.

NOTE: Occasionally package metallization is intentionally burnished or scratched, in areas which require wire bond attachment, to improve surface bondability; such conditions are not cause for rejection. Burnished or scratched areas must satisfy the criteria of 3.3.4b.

g. Excessive scratches in carrier metallization due to abuse in handling or processing.

h. Any staple, bridge, or clip with solder joint which exhibits less than 50 percent wetting around the section that is attached to the package.

i. Any header post(s) which are not perpendicular within 10 degrees of the horizontal plane of the header.

j. Any lead attach eutectic or solder which extends across greater than 50 percent of the design separation gap between metallization pads.

Source: https://assist.dla.mil -- Downloaded: 2016-12-03T20:24Z
Check the source to verify that this is the current version before use.

3.3.6 Presence of extraneous matter. Extraneous matter (foreign particles) shall include, but not be limited to:

a. Any foreign particle, loose or attached, greater than .003 inch (0.08 mm) or of any lesser size which is sufficient to bridge nonconnected conducting elements of the device.

b. Any wire tail extending beyond its normal end by more than two diameters at the semiconductor die pad or by more than four wire diameters at the package post (see figure 2069-3).

c. Any burr on a post (header lead) greater than .003 inch (0.08 mm) in its major dimension or of such configuration that it may break away.

d. Excessive semiconductor die bonding material buildup. A semiconductor die shall be mounted and bonded so that it is not tilted more than 10 degrees from mounting surface. The bonding agent that accumulates around the perimeter of the semiconductor die and touches the side of the semiconductor die shall not accumulate to a thickness greater than that of the semiconductor die (see figures 2069-4 and 2069-5). Where the bonding agent is built up but is not touching the semiconductor die, the build up shall not be greater than twice the thickness of the semiconductor die. There shall be no excess semiconductor die bonding material in contact with the active surface of the semiconductor die or any lead or post, or separated from the main bonding material area (see figure 2069-6).

e. Flaking on the header or posts or anywhere inside the case.

f. Extraneous ball bonds anywhere inside case, except for attached bond residue when rebonding is allowed.

3.4 Semiconductor conditions. No device shall be acceptable which exhibits any of the following defects:

3.4.1 Metallization, scratches, and voids exposing underlying material.

a. A scratch or void that severs the innermost guardring.

b. Any die containing a void in the metallization at the bonding pad covering more that 25 percent of the pad area.

c. For devices with non-expanded contacts and all power devices. Any scratch or void which isolates more than 25 percent of the total metallization of an active region from the bonding pad.

d. For all devices with expanded contacts. A scratch or void, whether or not underlying material is exposed, which leaves less than 50 percent undisturbed metal width in the metal connecting the pad and the contact regions.

e. For expanded contacts with less than or equal to 10 contact regions. A scratch or void extending across more than 50 percent of the first half of any contact region (beginning at the bonding area) in more than 10 percent of the contact regions.

f. For expanded contacts with less than or equal to 10 contact regions. A scratch or void in the contact area which isolates more then 10 percent of the metallized area form the bonding area.

3.4.2 Metallization corrosion. Any metallization which shows evidence of corrosion.

3.4.3 Metallization adherence. Any metallization which has lifted, peeled, or blistered.

Source: https://assist.dla.mil -- Downloaded: 2016-12-03T20:24Z
Check the source to verify that this is the current version before use.

3.4.4 Metallization probe marks. Criteria found in 3.4.1 shall apply as limitations for probing damage.

3.4.5 Metallization bridging. Metallization bridging between two normally unconnected metallization paths which reduces the separation, such that a line of oxide is not visible (no less than 0.1 mil) when viewed at the prescribed magnification.

3.4.6 Metallization alignment.

a. Except by design, contact window that has less than 50 percent of its area covered by continuous metallization.

b. A metallization path not intended to cover a contact window which is separated from the window by less than 0.1 mil.

3.4.7 Passivation faults.

a. Any passivation fault including pinholes not covered by glassivation that exposes semiconductor material and allows bridging between any two diffused areas, any two metallization strips, or any such combination not intended by design.

b. Except by design, an absence of passivation visible at the edge and continuing under the metallization causing an apparent short between the metal and the underlying material (closely spaced double or triple lines on the edges of the defect indicate that it may have sufficient depth to penetrate down to the silicon).

c. Except by design, any active junction not covered by passivation or glassivation.

3.4.8 Scribing and other die defects.

a. Except by design, less than 0.1 mil passivation visible between active metallization or bond pad periphery and the edge of the die.

b. Any chip-out or crack in the active area.

c. Except by design, die having attached portions of the active area on another die and which exceeds 10 percent of the area of the second die.

d. Any crack which extends 2 mils in length inside the scribe grid or scribe line that points toward active metallization or active area and extends into the oxide area.

e. Any chip-out that extends to within 1 mil of a junction.

f. Any crack or chip-out that extends under any active metallization area.

g. Any chip-out which extends completely through the guard ring.

Source: https://assist.dla.mil -- Downloaded: 2016-12-03T20:24Z
Check the source to verify that this is the current version before use.

3.4.9 Glassivation defects.

a. Glass crazing that prohibits the detection of visual criteria contained herein.

b. Any glassivation which has delaminated. (Lifting or peeling of the glassivation may be excluded from the criteria above, when it does not extend more than 1 mil from the designed periphery of the glassivation, provided that the only exposure of metal is adjacent to bond pads or of metallization leading from those pads.)

c. Except by design, two or more adjacent active metallization paths which are not covered by glassivation.

d. Unglassivated areas at the edge of bonding pad which expose silicon.

e. Glassivation which covers more than 25 percent of the design bonding pad area.

3.5 Post protective coating visual inspection. If devices are to be coated with a protective coating, the devices shall be visually examined in accordance with the criteria specified in 3, prior to the application of the coating. After the application and cure of the protective coating the devices shall be visually examined under a minimum of 10X magnification. No device shall be acceptable which exhibits any of the following defects:

a. Except by design, any unglassivated or passivated areas or insulating substrate which has incomplete age.

b. Open bubbles, cracks, or voids in the protective coating.

c. A bubble or a chain of bubbles which covers two adjacent metallized surfaces.

d. Protective coating which has flaked or peeled.

e. Protective coating which is not fully cured.

f. Conductive particles which are embedded in the coating and are large enough to bridge the narrowest unglassivated active metal spacing (silicon chips shall be included as conductive particles).

g. Except by design, a web of protective coating that connects the wire with the header.

4. Summary. The following details shall be specified in the applicable specification:

a. Exceptions or additions to the inspection method.

b. Where applicable, any conflicts with approved circuit design topology or construction.

c. Where applicable; gauges, drawings, and photographs that are to be used as standards for operator comparison.

d. When applicable, specific magnification.

Source: https://assist.dla.mil -- Downloaded: 2016-12-03T20:24Z
Check the source to verify that this is the current version before use.

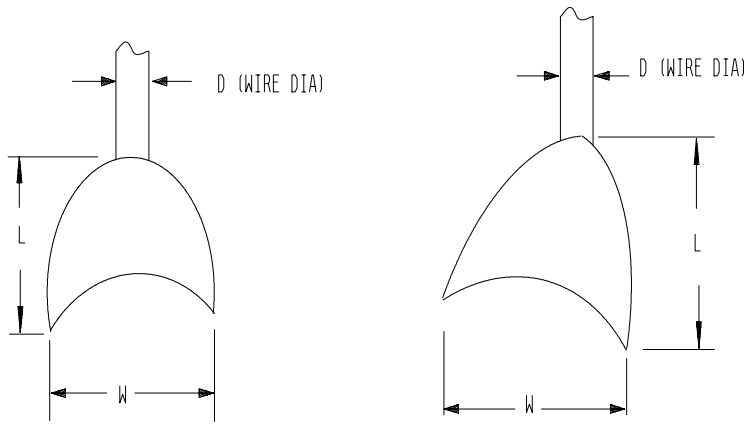

A. Tailless or crescent.

NOTES:
1. 1.2 D ≤ W ≤ 5.0 D (width).
2. 0.5 D ≤ L ≤ 3.0 D (length).

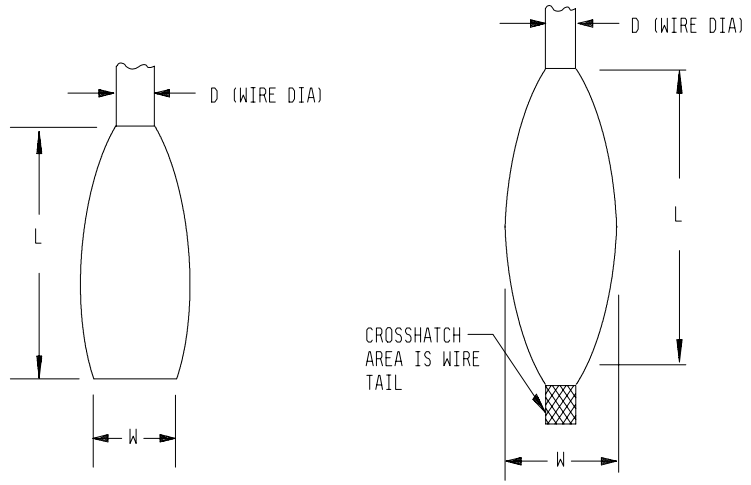

B. Wedge.

Ultrasonic

NOTES:
1. 1.0 D ≤ W ≤ 3.0 D (width).
2. 1.5 D ≤ L ≤ 5.0 D (length).

Thermocompression

NOTES:
1. 1.2 D ≤ W ≤ 3.0 D (width).
2. 1.5 D ≤ L ≤ 5.0 D (length).

FIGURE 2069-1. Bond dimensions.

Source: https://assist.dla.mil -- Downloaded: 2016-12-03T20:24Z
Check the source to verify that this is the current version before use.

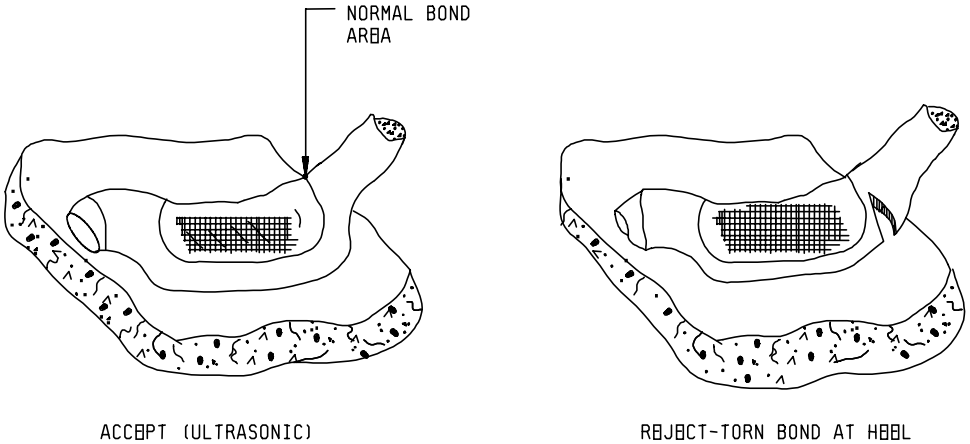

FIGURE 2069-2. Lifted/torn bonds.

Source: https://assist.dla.mil -- Downloaded: 2016-12-03T20:24Z
Check the source to verify that this is the current version before use.

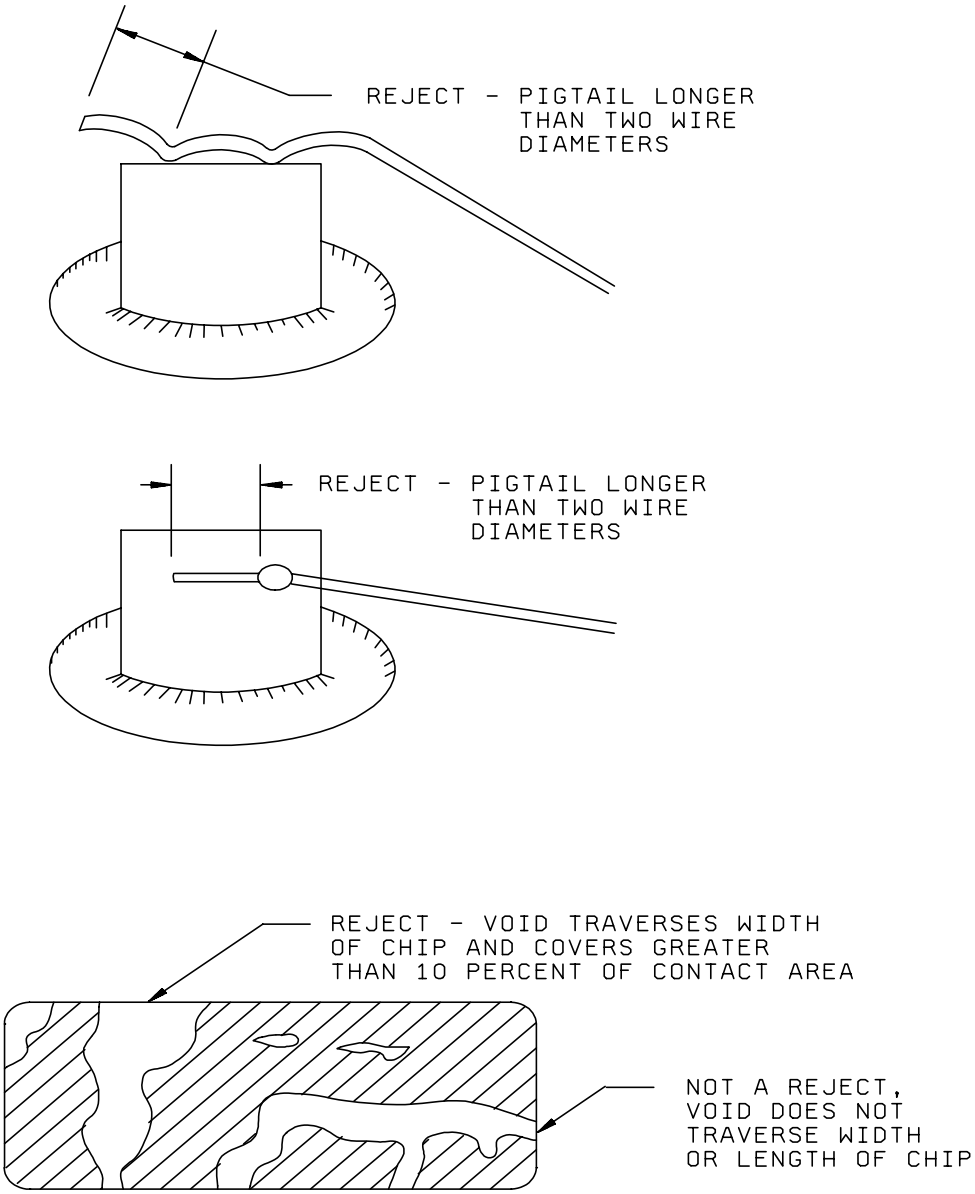

FIGURE 2069-3. Acceptable and unacceptable voids and excessive pigtails.

Source: https://assist.dla.mil -- Downloaded: 2016-12-03T20:24Z
Check the source to verify that this is the current version before use.

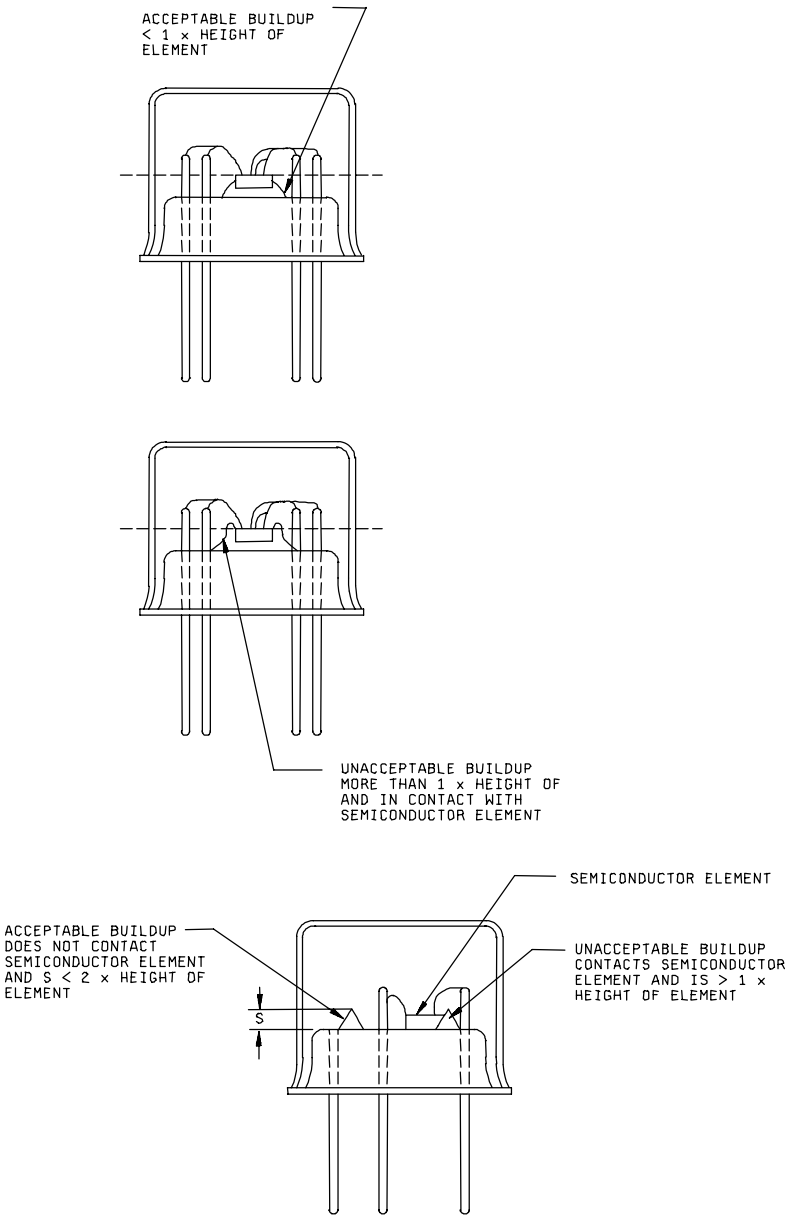

FIGURE 2069-4. Acceptable and unacceptable bonding material build-up.

Source: https://assist.dla.mil -- Downloaded: 2016-12-03T20:24Z
Check the source to verify that this is the current version before use.

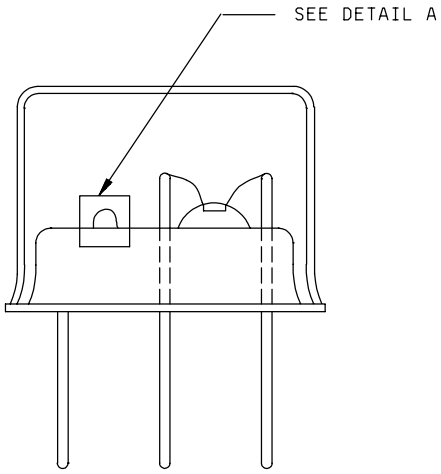

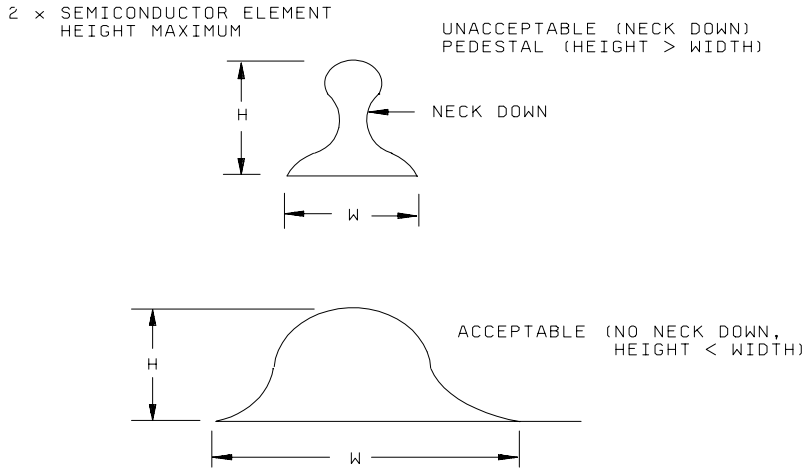

FIGURE 2069-5. Extraneous bonding material build-up.

Source: https://assist.dla.mil -- Downloaded: 2016-12-03T20:24Z
Check the source to verify that this is the current version before use.

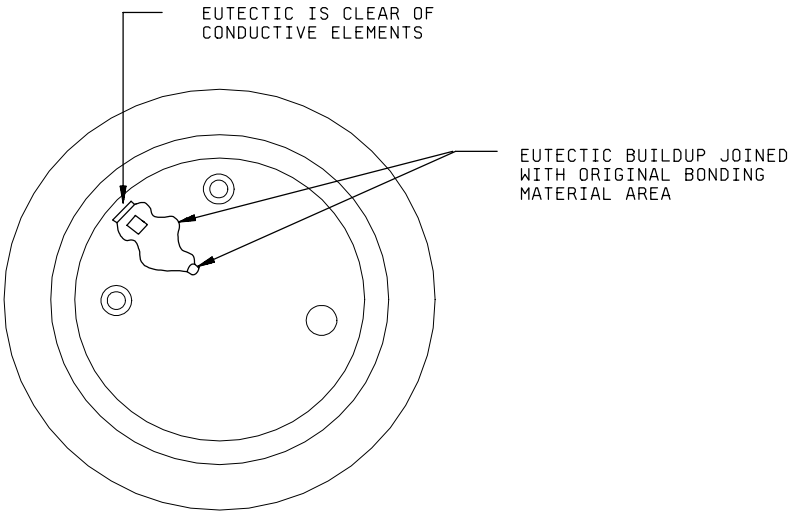

ACCEPTABLE

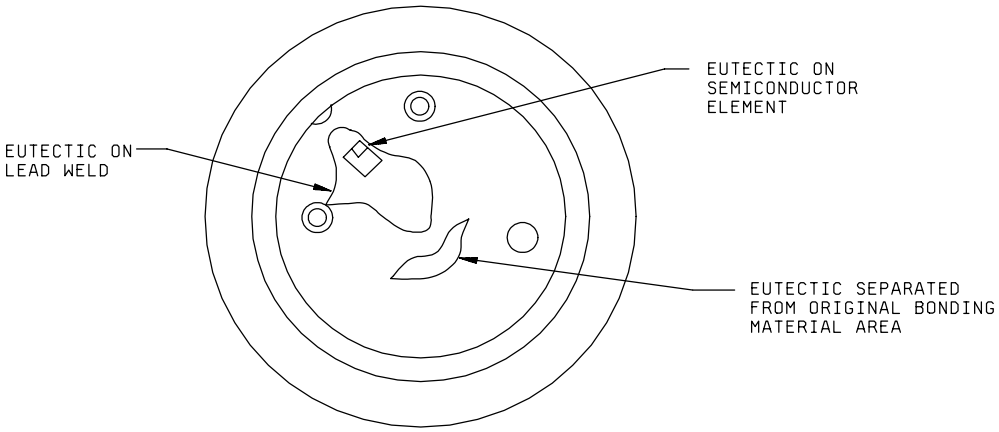

UNACCEPTABLE

FIGURE 2069-6. Acceptable and unacceptable excess material.

Source: https://assist.dla.mil -- Downloaded: 2016-12-03T20:24Z
Check the source to verify that this is the current version before use.

METHOD 2071.5

VISUAL AND MECHANICAL

1. Purpose. The purpose of this test is to verify the workmanship of hermetically packaged devices. This method shall also be utilized to inspect for damage due to handling, assembly, and test of the packaged device. This test is normally employed at outgoing inspection within the device manufacturer's facility, or as an incoming inspection of the assembled device.

2. Apparatus. Apparatus used in this test shall be capable of demonstrating device conformance to the applicable requirements of the individual specification. This includes optical equipment capable of magnification of 3X minimum to as specified herein, with a large field of view such as an illuminated ring magnifier.

3. Procedure. Unless otherwise specified, the device shall be examined under a magnification of 3X minimum. The field of view shall be sufficiently large to contain the entire device and allow inspection to the criteria listed in 3.1. Where inspection at a lower magnification reveals an anomaly, then inspection at a higher magnification (10X maximum, unless otherwise specified) may be performed to determine acceptability.

When a disposition is in doubt for any dimensional criteria, that dimension may be measured for verification.

3.1 Failure criteria. Devices which exhibit any of the following shall be considered rejects.

3.1.1 Rejects. Device construction (package outline), lead (terminal), identification, markings (content, placement, and legibility), and workmanship not in accordance with the applicable specification shall be rejected. This includes the following:

a. Any misalignment of component parts to the extent that the package outline drawing dimensions are exceeded.

b. Visual evidence of corrosion or contamination. Discoloration is not sufficient cause for rejection. The presence of lead carbonate formations in the form of a white/yellow crystalline shall be considered evidence of contamination.

c. Damaged or bent leads or terminals which precludes their use in the intended application.

d. Defective finish: Evidence of blistering, or evidence of nonadhesion, peeling, or flaking which exposes underplate or base metal.

e. Burrs that will cause lead or terminal dimensions to be exceeded.

f. Foreign material (including solder or other metallization) bridging leads or otherwise interfering with the normal application of the device. Where adherence of foreign material is in question, devices may be subjected to a clean filtered air stream (suction or expulsion) or an isopropyl alcohol wash and then reinspected.

g. Protrusions beyond seating plane that will interfere with proper seating of the device.

h. Missing welds or crimps.

i. Damage causing distortion of a flange beyond its normal configuration.

Source: https://assist.dla.mil -- Downloaded: 2016-12-03T20:24Z
Check the source to verify that this is the current version before use.

j. Damage to a stud (thread damage or bending) which restricts normal mounting.

k. Dents in metal lids which precludes their use in the intended application or causing a defect in the finish (see 3.1.1.d).

l. Gaps, separations, or other openings that are not part of the normal design configuration.

m. Tubulation weld: Any fracture or split in the tubulation weld.

n. Weld alignment: Base weld mating surfaces not parallel, or that precludes intended use.

3.1.1.1 Failure criteria for lead/terminal seal area of metal can devices.

a. Radial cracks (except meniscus cracks) that extend more than one-half of the distance from the pin to the outer member (see figure 2071-1). Radial cracks that originate from the outer member.

b. Circumferential cracks (except meniscus cracks) that extend more than 90 degrees around the seal center (see figure 2071-2).

c. Open surface bubble(s) in strings or clusters that exceed two-thirds of the distance between the lead and the package wall.

d. Visible subsurface bubbles that exceed the following:

(1) Large bubbles or voids that exceed one-third of the glass sealing area (see figure 2071-3).

(2) Single bubble or void that is larger than two-thirds of the distance between the lead and the package wall at the site of the inclusion and extends more than one-third of the glass seal depth (see figure 2071-4).

(3) Two bubbles in a line totaling more than two-thirds of the distance from pin to case (see figure 2071-5).

(4) Interconnecting bubbles greater than two-thirds of the distance between pin and case (see figure 2071-6).

e. Except as designed, reentrant seals which exhibit non-uniform wicking or negative wicking.

f. Twenty-five percent or greater of the radius length from the center of the feedthrough to the edge of the glass eyelet.

g. Glass meniscus cracks that are not located within one-half of the distance between the lead to the case (see figure 2071-7). The glass meniscus is defined as that area of glass that wicks up the lead or terminal.

h. Any chip-out of ceramic or sealing glass that penetrates the sealing glass deeper than the glass meniscus plane. Exposed base metal as a result of meniscus chip outs are acceptable if the exposed area is no deeper than 0.010 inch (0.25 mm) or 50 percent of lead diameter, whichever is greater (see figure 2071-8).

3.1.1.2 Failure criteria for ceramic packages. Failure criteria for ceramic packages (see method 2009 of MIL-STD-883).

3.1.1.3 Failure criteria for opaque glass body devices. Failure criteria for opaque glass body devices (see method 2068 of MIL-STD-750).

Source: https://assist.dla.mil -- Downloaded: 2016-12-03T20:24Z
Check the source to verify that this is the current version before use.

3.1.1.4 Transparent glass diodes, double plug construction.

a. Any evidence of a crack, fracture, or a chipout closer to the die than 50 percent of the designed seal length shall be rejected. Area of examination shall be as shown on figure 2071-9.

b. Any crack that terminates in the axial direction are not cause for rejection

3.1.1.5 Transparent glass diodes, large cavity (i.e. S-bend, C-bend, or straight-through constructions). Any crack or fracture in the glass over the area of the device cavity shall be rejected.

a. Any chip out that exposes base metal shall be rejected (this does not apply to chipouts at either end of device where glass joins external lead).

b. Any crack in the axial direction longer than 25 percent of the designed seal length shall be rejected.

c. Meniscus cracks are not cause for rejection.

3.1.1.6 Failure criteria for hermetic packages with ceramic eyelet feedthroughs.

a. Any separation or delamination of the braze metallization from the inner diameter (ID) or outer diameter (OD) of the ceramic eyelet (see figures 2071-10 and 2071-11).

b. Any cracks or separation in the braze between the ceramic eyelet ID and the lead or the ceramic eyelet OD and the package. Any voids, depressions, or pinholes the bottom of which cannot be seen at 30X maximum magnification in the braze between the ceramic eyelet ID and the lead or the ceramic eyelet OD and the package.

c. Any discontinuation in the braze from the ceramic eyelet ID to the lead or the ceramic eyelet OD to the package exposing unplated metallization or bare ceramic.

d. Any conductive material attached to the ceramic eyelet that reduces the designed isolation width by more than one-third unless it is demonstrated that the device voltage isolation requirement can be met with less than two-thirds of the width of the ceramic eyelet (see figures 2071-16 through -26).

e. Any metallization that extends beyond the height of the ceramic that is not adhered to the ceramic.

f. No cracks are allowed. Chipouts greater than .005 inches (0.127 mm) in any direction are not allowed.

4. Summary. The following details shall be specified in the applicable acquisition document:

a. Requirements for markings and the lead (terminal) or pin identification.

b. Detailed requirements for materials, design, construction, and workmanship.

c. Magnification requirements, if other than specified.

Source: https://assist.dla.mil -- Downloaded: 2016-12-03T20:24Z
Check the source to verify that this is the current version before use.

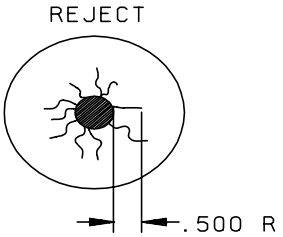

FIGURE 2071-1. Radial cracks extending more than one-half the distance from pin to outer member.

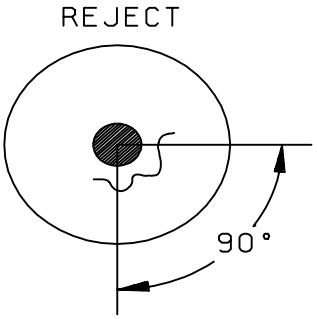

FIGURE 2071-2. Circumferential cracks.

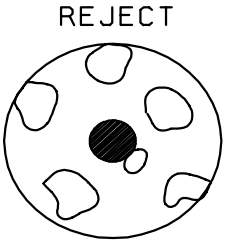

FIGURE 2071-3. Bubbles in glass exceeding one-third of the sealing area.

Source: https://assist.dla.mil -- Downloaded: 2016-12-03T20:24Z
Check the source to verify that this is the current version before use.

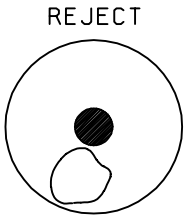

FIGURE 2071-4. Single bubble or void.

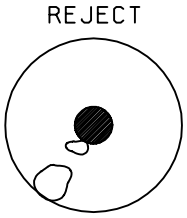

FIGURE 2071-5. Two bubbles in a line.

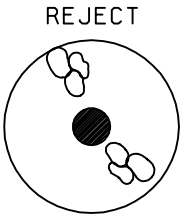

FIGURE 2071-6. Interconnecting bubbles.

Source: https://assist.dla.mil -- Downloaded: 2016-12-03T20:24Z
Check the source to verify that this is the current version before use.

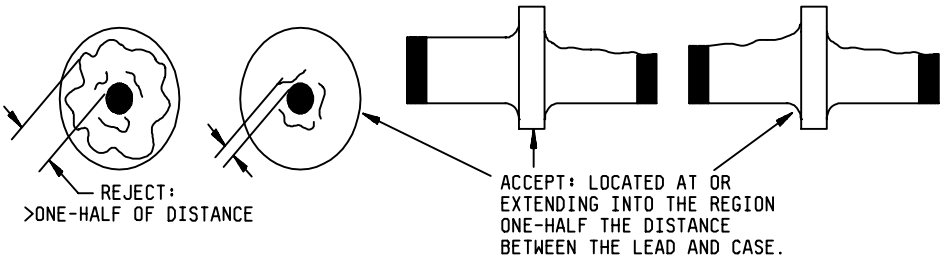

FIGURE 2071-7. Meniscus cracks.

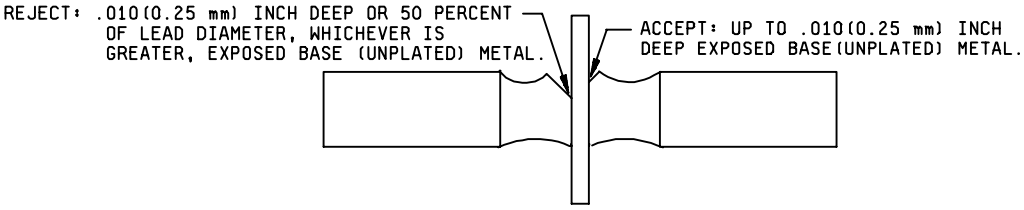

FIGURE 2071-8. Chip outs.

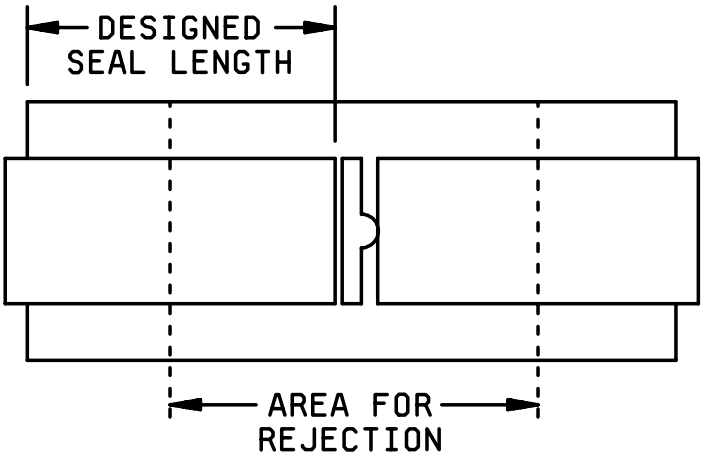

FIGURE 2071-9. Transparent glass diode (double plug construction).

Source: https://assist.dla.mil -- Downloaded: 2016-12-03T20:24Z
Check the source to verify that this is the current version before use.

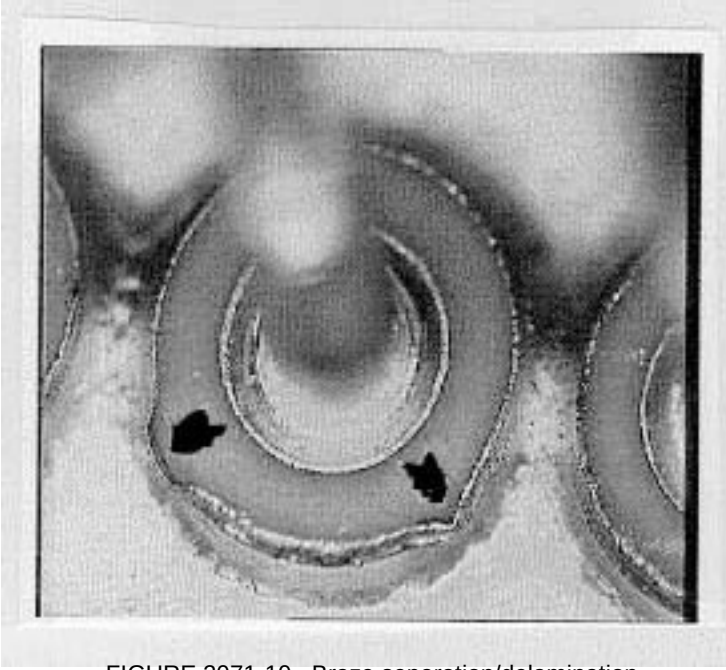

FIGURE 2071-10. Braze separation/delamination.

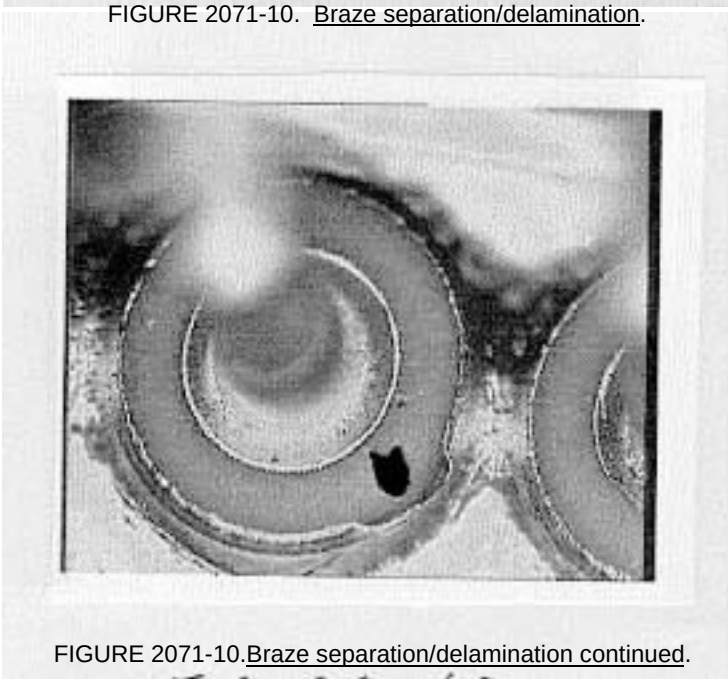

FIGURE 2071-10.Braze separation/delamination continued.

Arrows on both pictures illustrate rejectable conditions of braze separation/delamination.

Source: https://assist.dla.mil -- Downloaded: 2016-12-03T20:24Z
Check the source to verify that this is the current version before use.

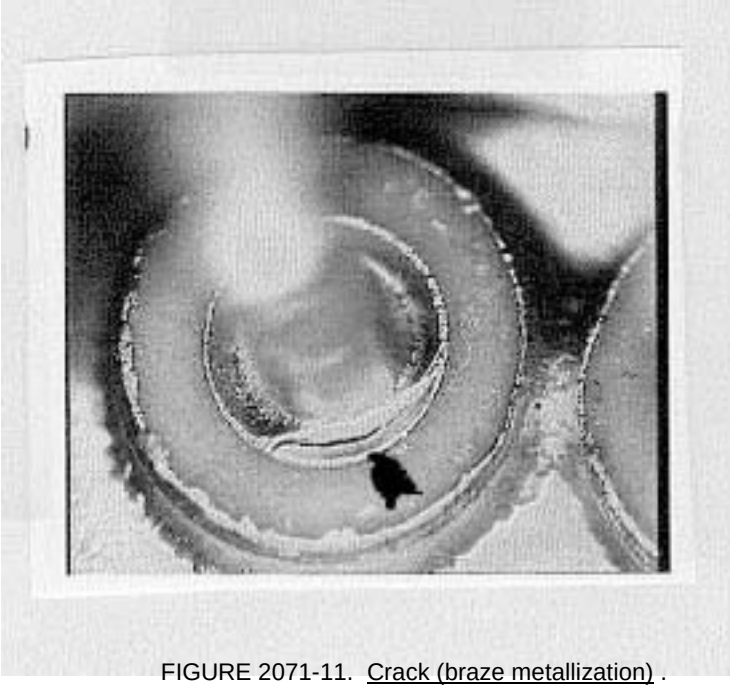

FIGURE 2071-11. Crack (braze metallization) .

Reject: Arrow indicates a crack on the inner diameter braze metallization of the ceramic eyelet.

Source: https://assist.dla.mil -- Downloaded: 2016-12-03T20:24Z
Check the source to verify that this is the current version before use.

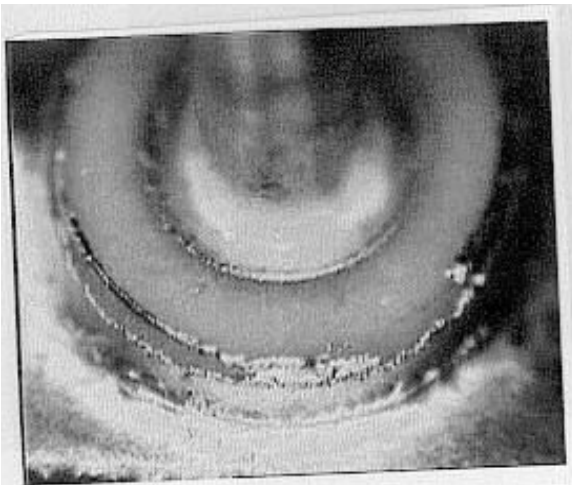

FIGURE 2071-12. Discontinuous braze metallization.

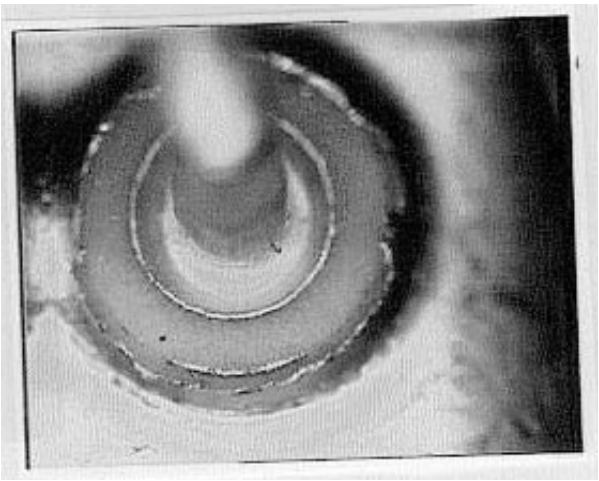

FIGURE 2071-12. Discontinuous braze metallization continued.

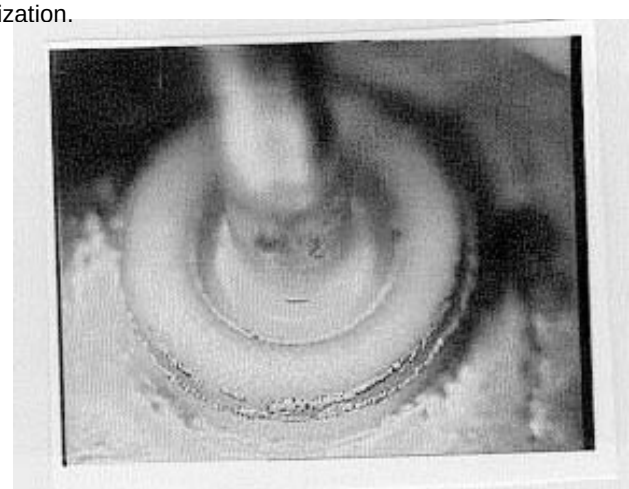

FIGURE 2071-12. Discontinuous braze metallization continued.

Reject: All three figures illustrate discontinuous braze metallization on the outer diameter of the ceramic eyelet.

Source: https://assist.dla.mil -- Downloaded: 2016-12-03T20:24Z
Check the source to verify that this is the current version before use.

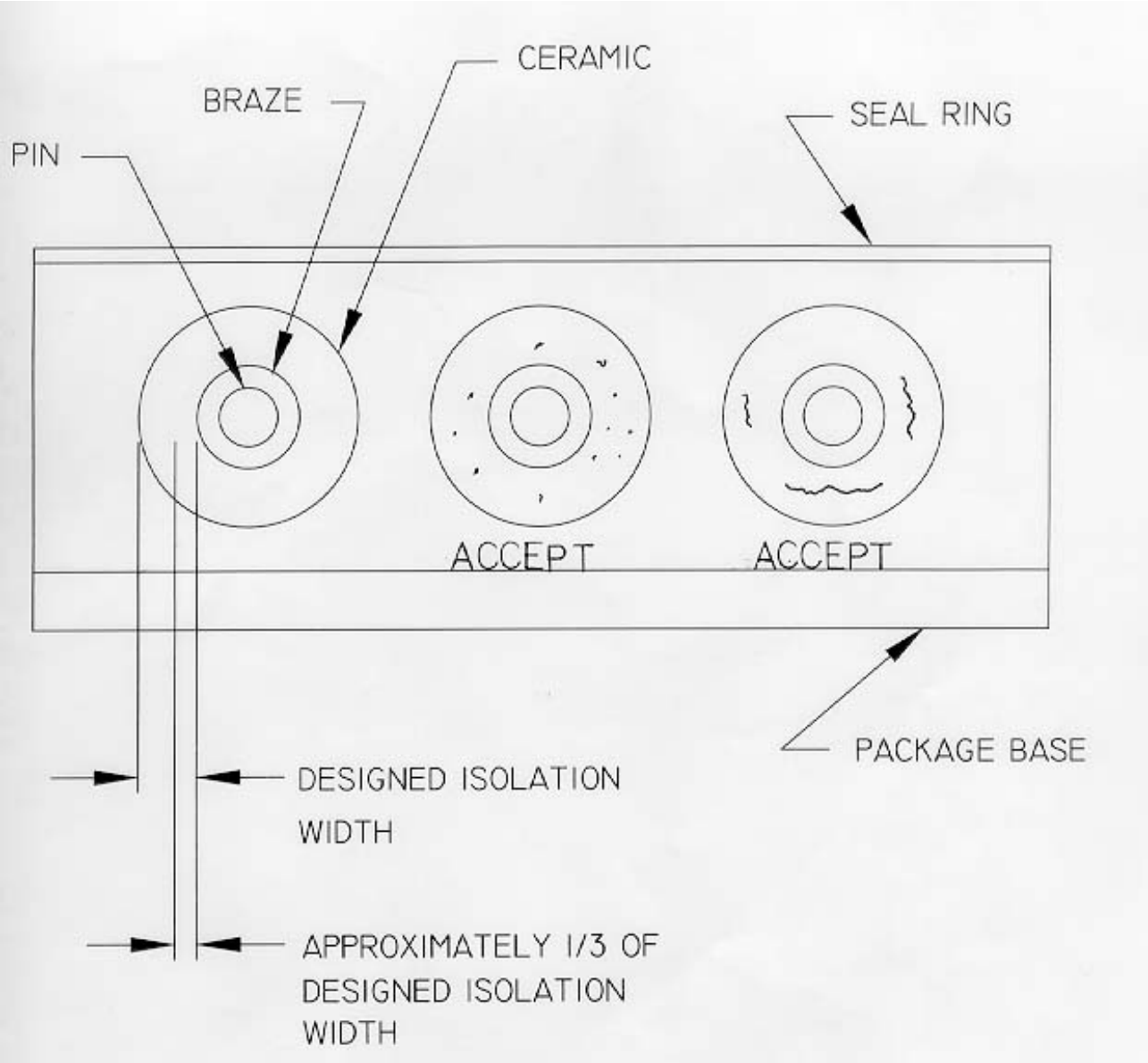

FIGURE 2071-13. Ceramic feedthrough visual inspection criteria.

Source: https://assist.dla.mil -- Downloaded: 2016-12-03T20:24Z
Check the source to verify that this is the current version before use.

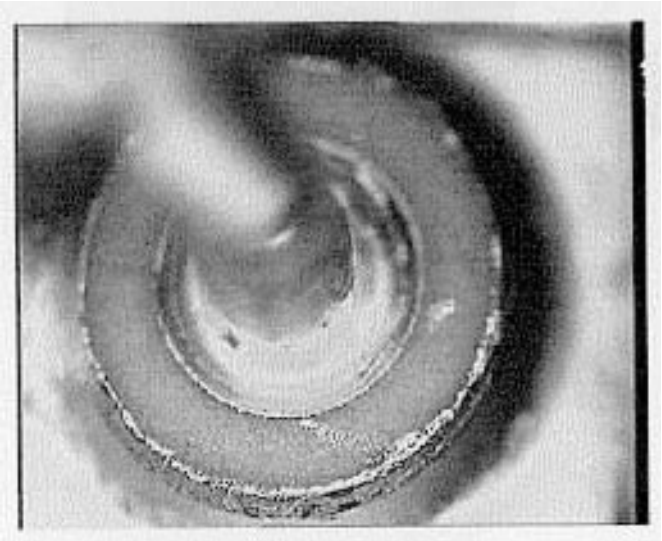

FIGURE 2071-14. Rejectable foreign material conditions continued.

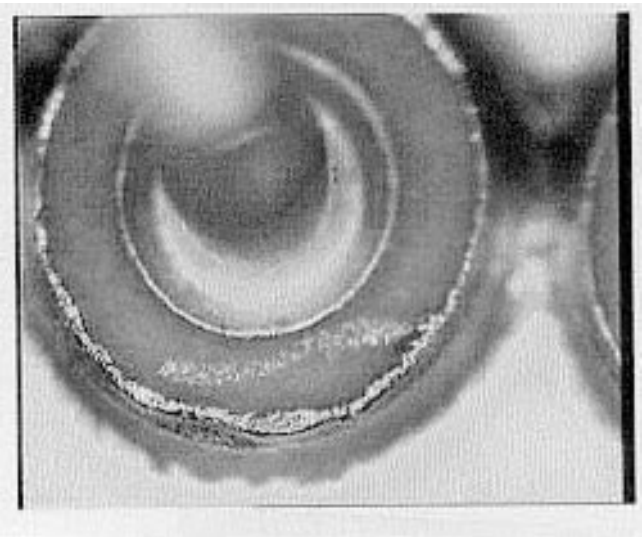

FIGURE 2071-14. Rejectable foreign material conditions continued.

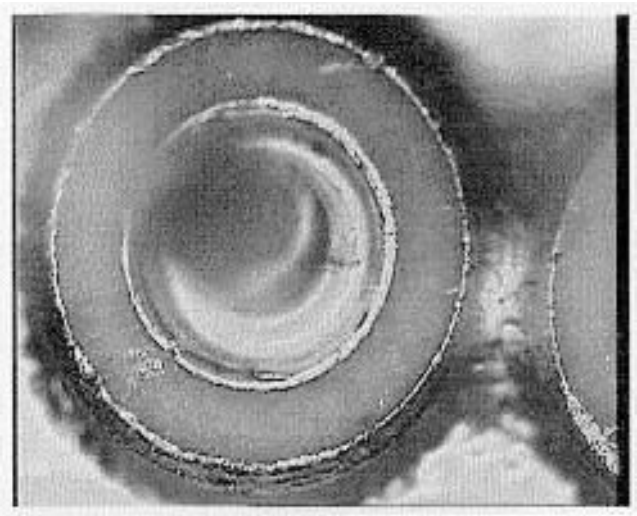

FIGURE 2071-14. Rejectable foreign material conditions continued.

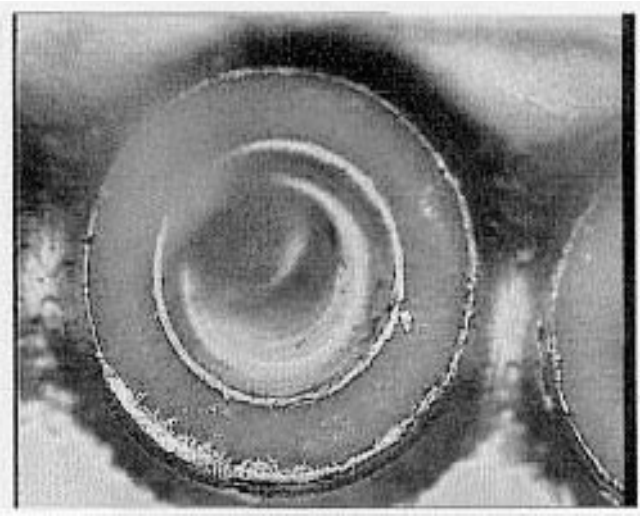

FIGURE 2071-14. Rejectable foreign material conditions continued.

Reject: All figures indicate rejectable foreign material conditions.

Source: https://assist.dla.mil -- Downloaded: 2016-12-03T20:24Z
Check the source to verify that this is the current version before use.

FIGURE 2071-14. Rejectable foreign material conditions continued.

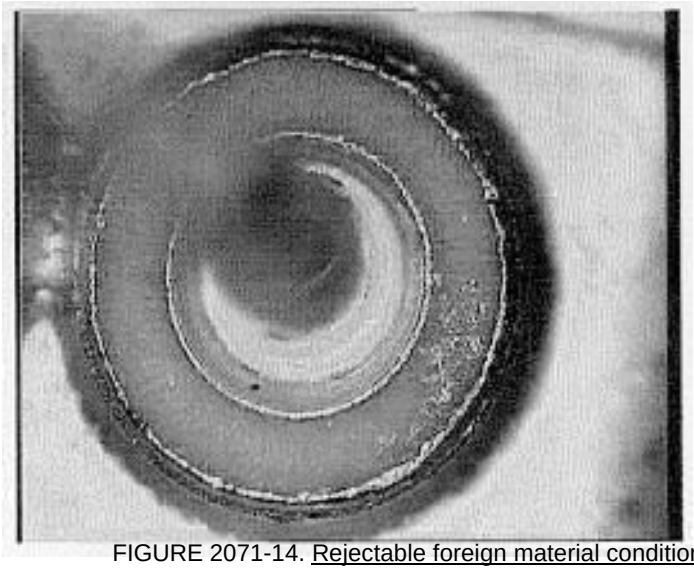

FIGURE 2071-14. Rejectable foreign material conditions continued.

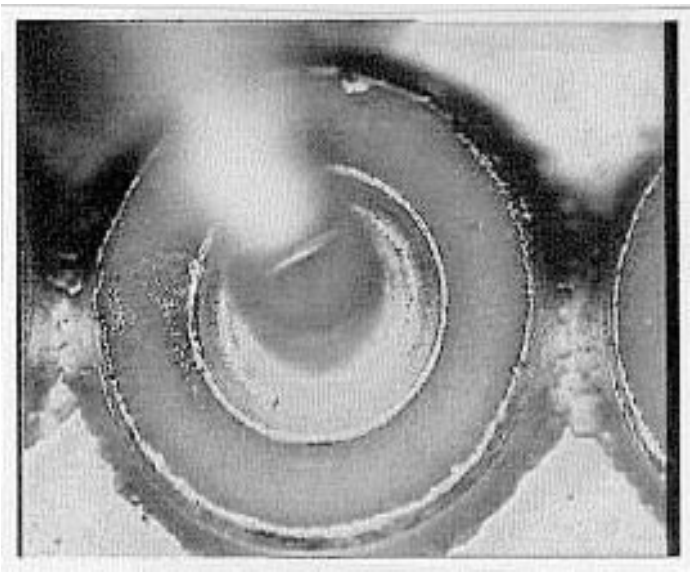

FIGURE 2071-14. Rejectable foreign material conditions continued .

Reject: All figures indicate rejectable foreign material conditions.

Source: https://assist.dla.mil -- Downloaded: 2016-12-03T20:24Z
Check the source to verify that this is the current version before use.

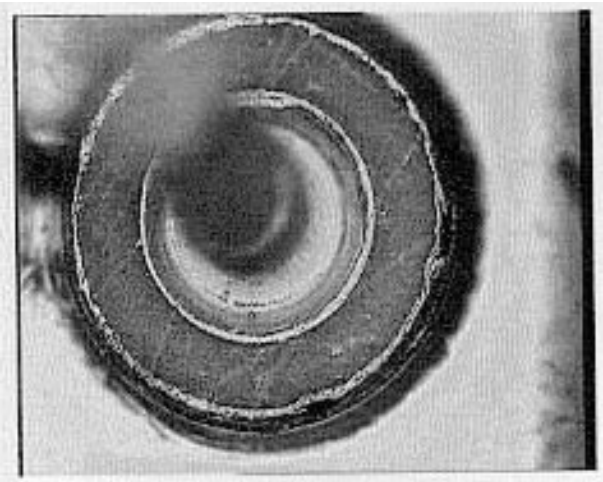

FIGURE 2071-14. Rejectable foreign material conditions continued .

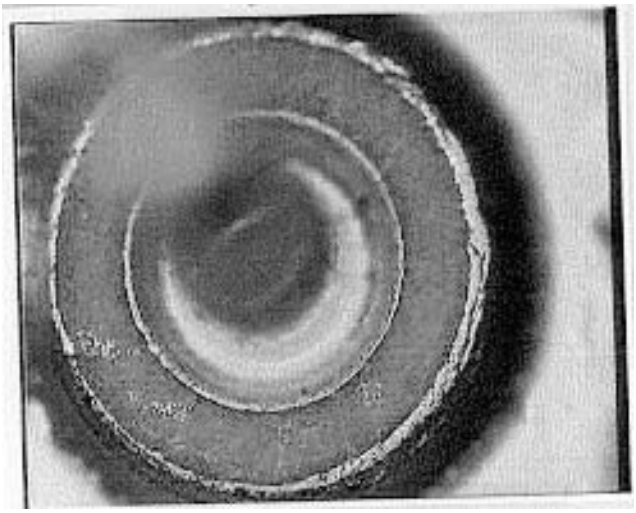

FIGURE 2071-14. Rejectable foreign material conditions continued.

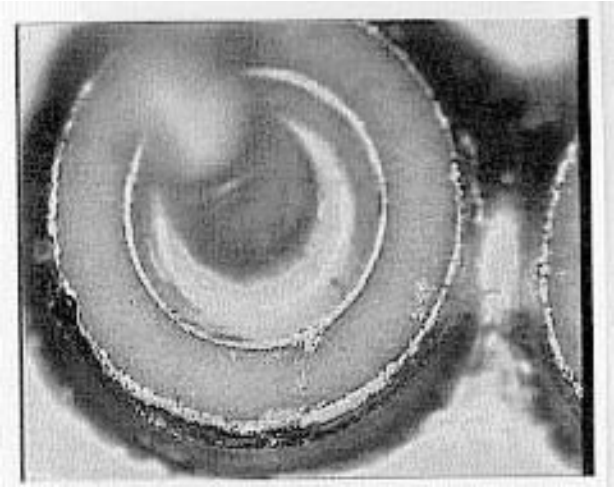

FIGURE 2071-14. Rejectable foreign material conditions continued.

Reject: All figures indicate rejectable foreign material conditions.

Source: https://assist.dla.mil -- Downloaded: 2016-12-03T20:24Z
Check the source to verify that this is the current version before use.

METHOD 2073.1

VISUAL INSPECTION FOR DIE (SEMICONDUCTOR DIODE)

1. Purpose. The purpose of this test is to check the quality and workmanship of semiconductor die for compliance with the requirements of the individual specification. All tests shall be performed to detect and eliminate those die with defects that could lead to device failures. This test will normally be used prior to installation on a 100 percent inspection basis. The test may also be employed on a sampling basis prior to encapsulation to determine the effectiveness of the manufacturer's quality control and handling procedures.

2. Definitions. The following definitions shall apply:

a. Active area: Any area where electrical contact may be made on the "N" or "P" regions of the die.

b. Active region: Region covered by passivation that supports electrical activity and junction geometries.

c. Foreign material (attached): Any conductive or nonconductive material that is not part of the die construction. Conductive foreign material is defined as any substance that appears opaque under those conditions of lighting and magnification used in routine visual inspections. Therefore, nonconductive foreign material is defined as any substance that appears transparent

d. Junction: The boundary between "P" and "N" type semiconductor material. (In the case of a Schottky diode, there is no actual junction other than the guard ring. Schottky diodes have a barrier that exists at the metal-silicon contact, however, for the purposes of this document the barrier will be treated as a junction.)

e. Passivation: Silicon oxide, silicon nitride, or other insulating material that is grown or deposited directly over the "P-N" junction or the Schottky guard ring “P-N” junction.

3. Apparatus.

a. The apparatus for this test shall include optical equipment and any visual standards (e.g., gauges, drawings, photographs) necessary to perform an effective examination and enable the examiner to make objective decisions on the acceptability of the die being examined. Adequate fixturing shall be provided for handling die without contamination during examination.

b. Unless otherwise specified by the individual specification or procuring activity, magnification at 20X and 30X minimum shall be performed with a monocular, binocular, or stereo microscope. The inspection shall be performed under suitable illumination. Binocular and stereo microscopes shall have each eyepiece individually focused for the examiner.

4. Procedure. The die shall be examined in a suitable sequence of operations and at the specified magnifications to determine compliance with the requirements of the individual specification and the criteria of the specified test conditions. The sequence of examinations required may be varied at the discretion of the manufacturer.

4.1 Die inspections. These inspections shall apply to alloy, diffused mesa, epitaxial mesa, planar, and epitaxial planar construction techniques. Unless otherwise specified, inspections shall be made on a random selection of at least one side of each die being inspected. If a lot fails, 100 percent inspection of the total lot shall be performed.

Source: https://assist.dla.mil -- Downloaded: 2016-12-03T20:24Z
Check the source to verify that this is the current version before use.

4.1.1 Type of die examined. Determine type of die being examined by referring to figure 2073-1 through figure 2073-8. An exact match is not necessary, select a representative figure. If a representative figure cannot be discerned, perhaps elements of different figures will apply. Contact the die vendor source for assistance in matching an appropriate figure. NOTE: Hexagonal shaped die will be inspected to the same criteria as square die.

a.	Button contact diodes	Figure 2073-1.
b.	High voltage planar diode I	Figure 2073-2.
c.	High voltage planar diodes II.	Figure 2073-3.
d.	Inside moat mesa diodes.	Figure 2073-4.
e.	Low voltage contact overlay diodes.	Figure 2073-5.
f.	Low voltage planar diode.	Figure 2073-6.
g.	Outside moat mesa diodes.	Figure 2073-7.
h.	Schottky barrier diodes.	Figure 2073-8.

4.2 Examination options. Examine die according to the appropriate figure, its illustrations, and associated textual criteria.

a. Option A: Front side visual inspection with sample size specified by individual specification or procuring activity. If no sample size is specified, 100 percent visual is assumed.

b. Option B: Backside visual in addition to front side visual. Backside inspection is conducted with sample size specified by individual specification or procuring activity. If no sample size is specified, use sample size 22 for class H or sample size 45 for class K and reject on 1.

NOTE: If no option is specified by the individual specification or procuring activity, option A will apply.

4.3 Foreign material. Examine die for attached conductive foreign material. No detailed illustration is provided for this due to the random nature of such material. The examiner is expected to use their own judgment in this matter.

Source: https://assist.dla.mil -- Downloaded: 2016-12-03T20:24Z
Check the source to verify that this is the current version before use.

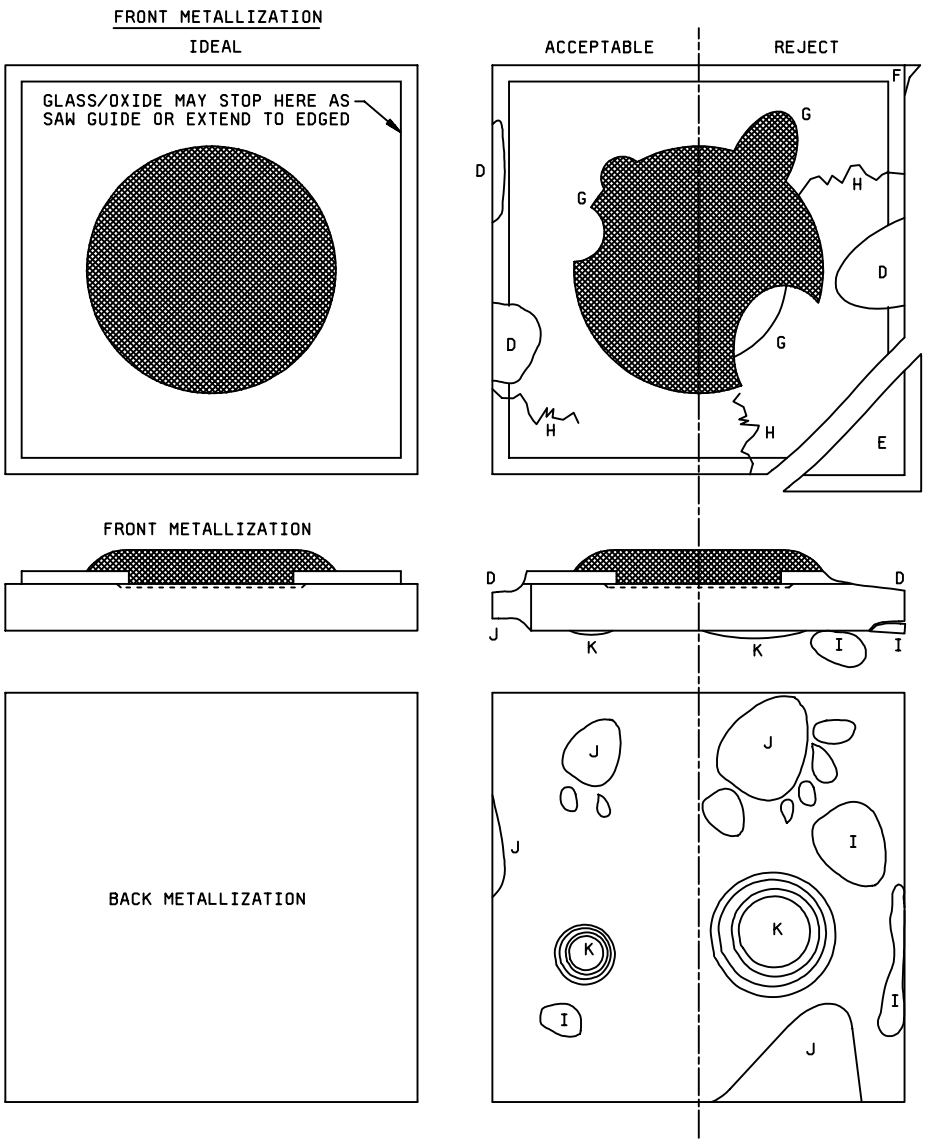

Note: Reject criteria
Edge chipping (D) may not extend more than 50 percent to metallization.

Missing pieces (E) extending beyond 50 percent to junction boundary or additional attached pieces (F) defined by an incomplete cut or scribe line are not permitted.

Additional front metallization extending 50 percent or more to the next geometric boundary (G) or pulled back to reveal contact area or any non-passivated active region.

Cracks (H) must not extend near the metalized button closer than 50 percent and must not be directed toward button such that additional propagation would intersect the button.

Backside
Back contamination and foreign material (I), either firmly or loosely attached, exceeding 10 percent of total area.

Missing backside metal (J) exceeding 20 percent of total area.

Blisters (K) in metalization exceeding 10 percent of total area.

FIGURE 2073-1. Button contact diodes (metal button overlays junction and active area).

Source: https://assist.dla.mil -- Downloaded: 2016-12-03T20:24Z
Check the source to verify that this is the current version before use.

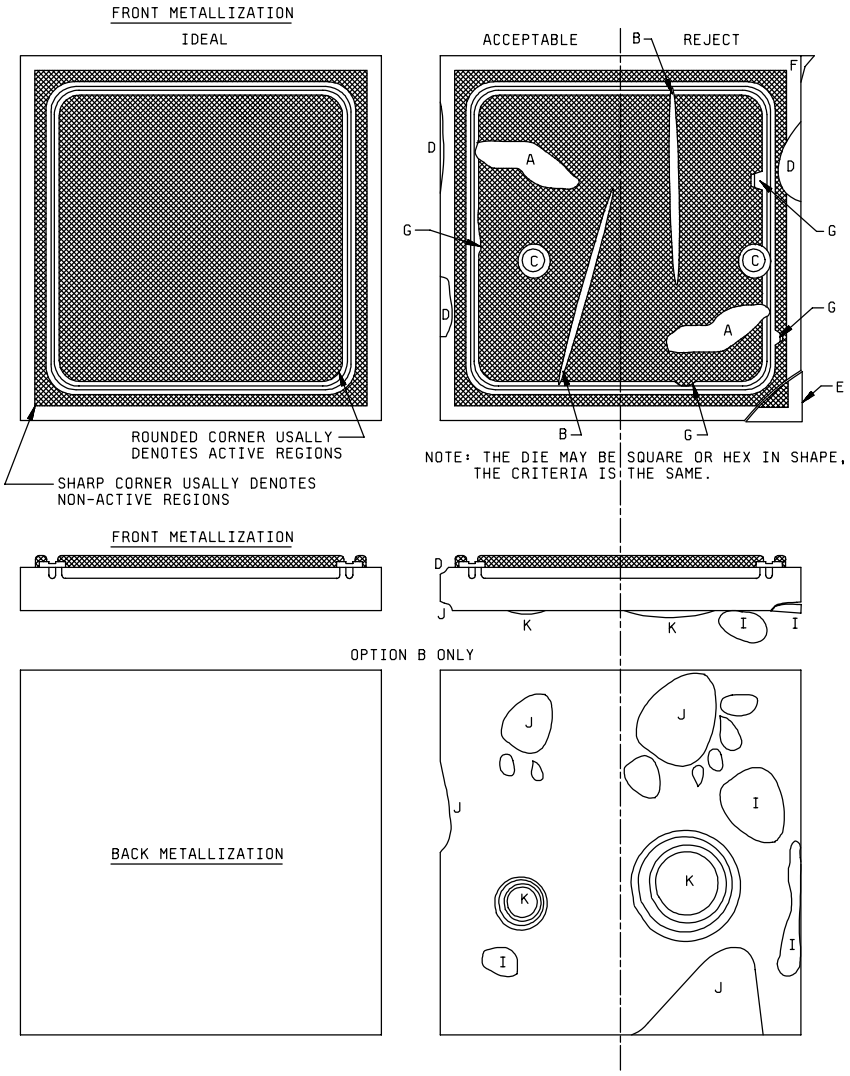

Reject criteria

Smears (A), scratches (B) or probe marks (C) may not extrude metal such that it covers any guard rings.

Edge chipping or cracks (D) may not extend into outside metallization ring (or if absent, 50 percent of distance between chip edge and nearest active ring.)

Missing pieces (E) extending into outside metal ring or additional attached pieces (F) defined by an incomplete cut or scribe line are not permitted.

Additional front metallization extending over nearest ring boundary (G) or pulled back to reveal contact area or any non passivated region.

Cracks (not illustrated) must not extend under the metalized areas and must not be present inside any of the active regions.

Backside

Backside contamination and foreign material (I), either firmly or loosely attached, exceeding 10 percent of total area.

Missing backside metal (J) exceeding 20 percent of total area.

Blisters (K) in metalization exceeding 10 percent of total area.

FIGURE 2073-2. High voltage planar diode I (guard ring(s) and outside metal oxide edge cover or field plate).

Source: https://assist.dla.mil -- Downloaded: 2016-12-03T20:24Z
Check the source to verify that this is the current version before use.

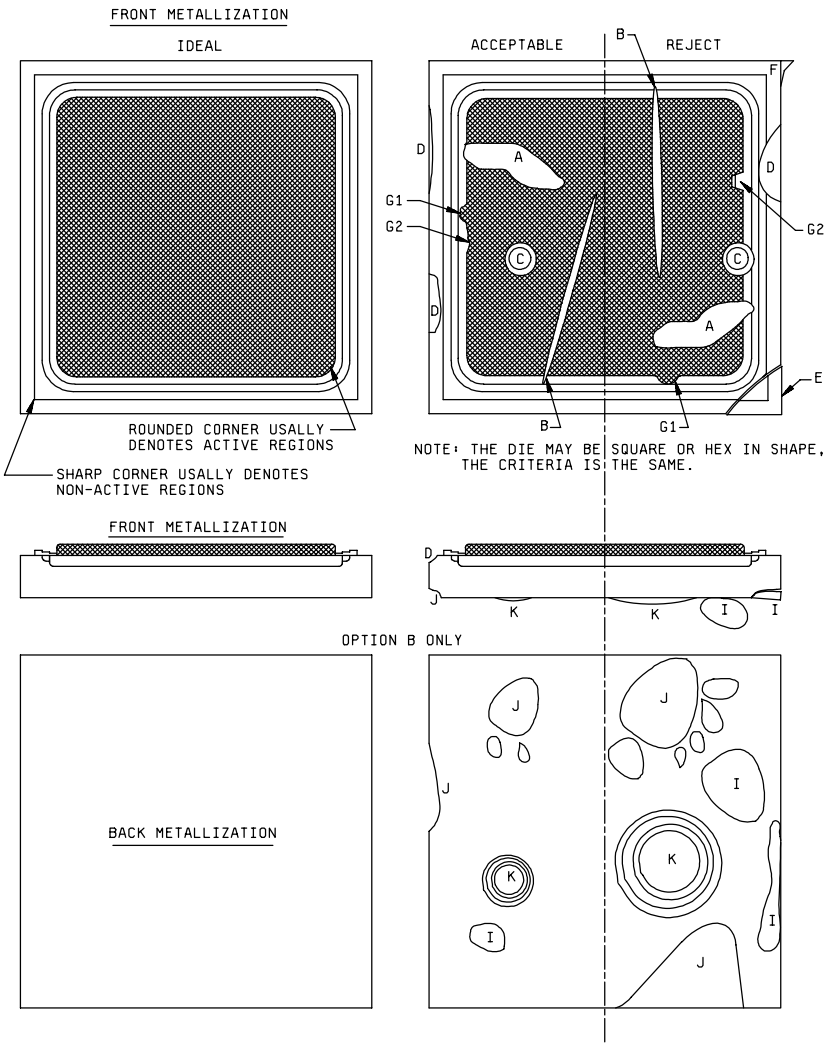

Reject criteria

Smears (A), scratches (B) or probe marks (C) may not extrude metal such that it extends over the next geometric boundary (covers the P-guard ring area).

Edge chipping or cracks (D) may not extend into outside metallization ring (or if absent, 50 percent of distance between chip edge and active ring boundary.)

Missing pieces (E) extending 50 percent of distance between chip edge and nearest ring boundary or additional attached pieces (F) defined by an incomplete cut or scribe line are not permitted.

Additional front islands of metallization crossing any diffusion line (G1) or pulled back to reveal contact area or any non-passivated region (G2). Note that G2 does not apply to chips designed without requiring metal-passivation overlay. In this latter exception, much or all of the oxide window will be exposed as a legal part of the design.

Cracks (not illustrated) must not extend under the metalized areas and must not be present inside any of the active regions.

Backside

Backside contamination and foreign material (I), either firmly or loosely attached, exceeding 10 percent of total area.

Missing backside metal (J) exceeding 20 percent of total area.

Blisters (K) in metalization exceeding 10 percent of total area.

FIGURE 2073-3. High voltage planar diodes II (integrated P-minus guard ring).

Source: https://assist.dla.mil -- Downloaded: 2016-12-03T20:24Z
Check the source to verify that this is the current version before use.

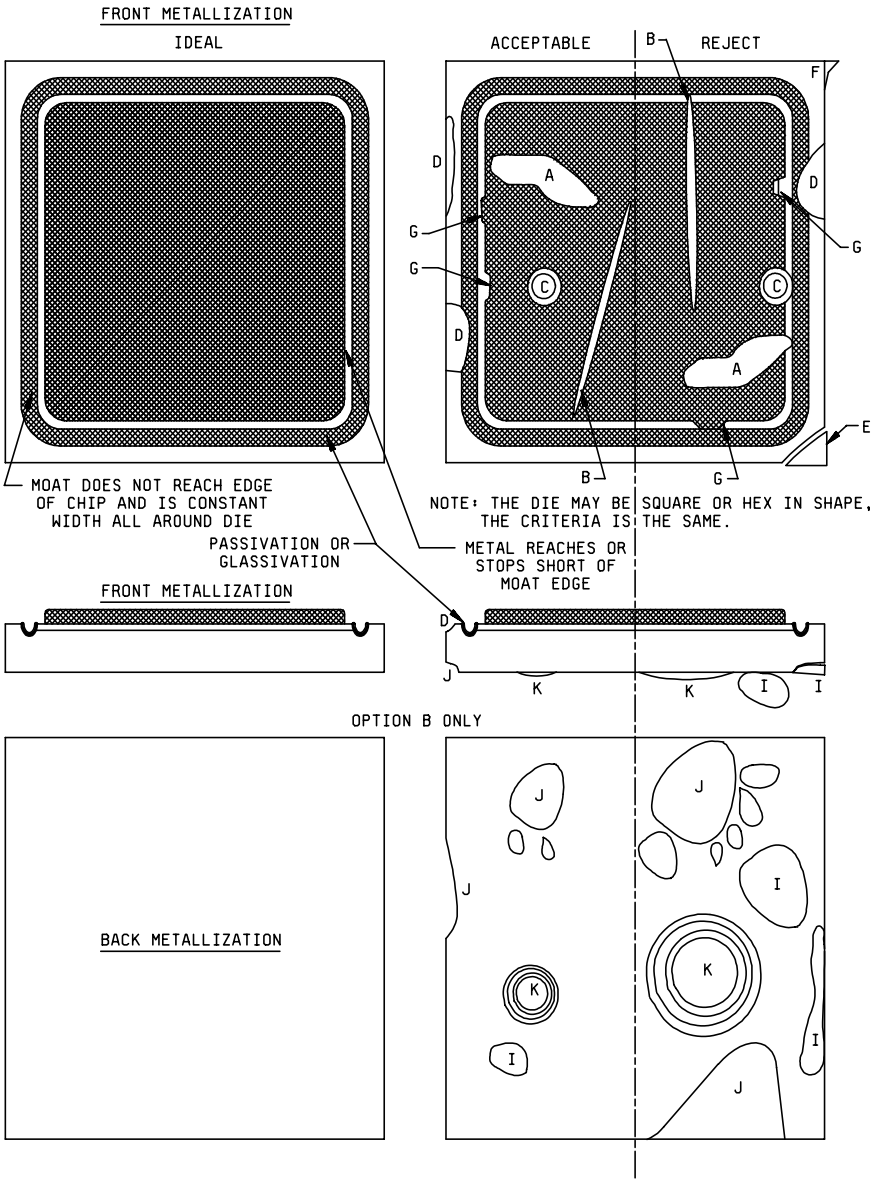

Reject criteria

Smears (A), scratches (B) or probe marks (C) may not extrude metal outside metalized region over moat edge.

Edge chipping or cracks (D) may not extend into moat area.

Missing pieces (E) extending 50 percent of distance between chip edge and the moat or additional attached pieces (F)-defined by an incomplete cut or scribe line are not permitted die.

Additional front metallization extending over into the moat (G) or pulled back to reveal contact area or any non-passivated region

Cracks (not illustrated) must not extend under the metalized areas nor more than 50 percent of the way across the moat from the outside.

Backside

Backside contamination and foreign material (I), either firmly or loosely attached, exceeding 10 percent of total area.

Missing backside metal (J) exceeding 20 percent of total area.

Blisters (K) in metalization exceeding 10 percent of total area.

FIGURE 2073-4. Inside moat mesa diodes (passivated moat does not extent to edge of die).

Source: https://assist.dla.mil -- Downloaded: 2016-12-03T20:24Z
Check the source to verify that this is the current version before use.

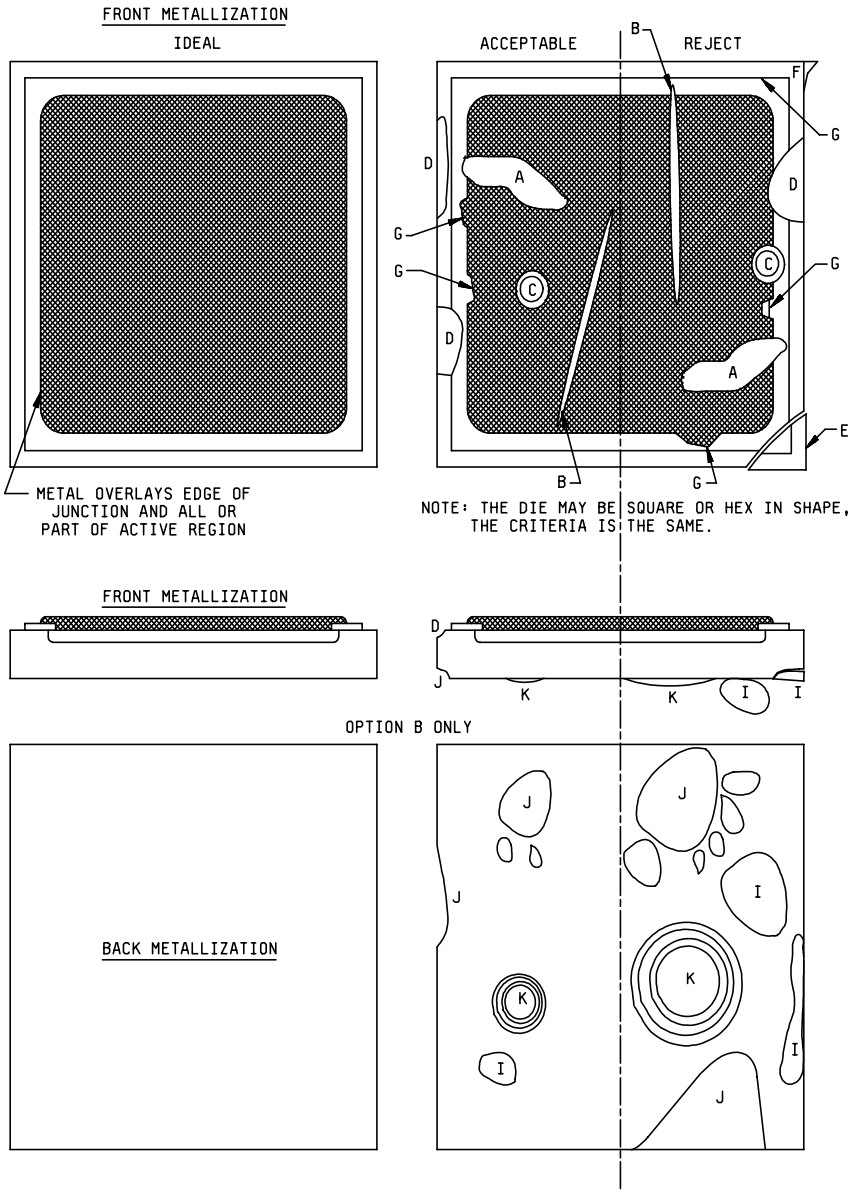

Reject criteria

Smears (A), scratches (B) or probe marks (C) may not extrude metal outside metalized region more than 50 percent of the way to the next boundary.

Edge chipping (D) may not extend into metallization.

Missing pieces (E) extending beyond 50 percent to metal boundary or additional attached pieces (F) defined by an incomplete cut or scribe are not permitted.

Additional front metallization extending 50 percent or more to the next geometric boundary (G) or pulled back to reveal contact area or any non passivated active region.

Cracks (not illustrated) must not extend under the metalized areas and must not be present inside any of the active regions.

Backside

Backside contamination and foreign material (I), either firmly or loosely attached, exceeding 10 percent of total area.

Missing backside metal (J) exceeding 20 percent of total area.

Blisters (K) in metallization exceeding 10 percent of total area.

FIGURE 2073-5. Low voltage contact overlay diodes (metal overlays junction and active area field plate).

Source: https://assist.dla.mil -- Downloaded: 2016-12-03T20:24Z
Check the source to verify that this is the current version before use.

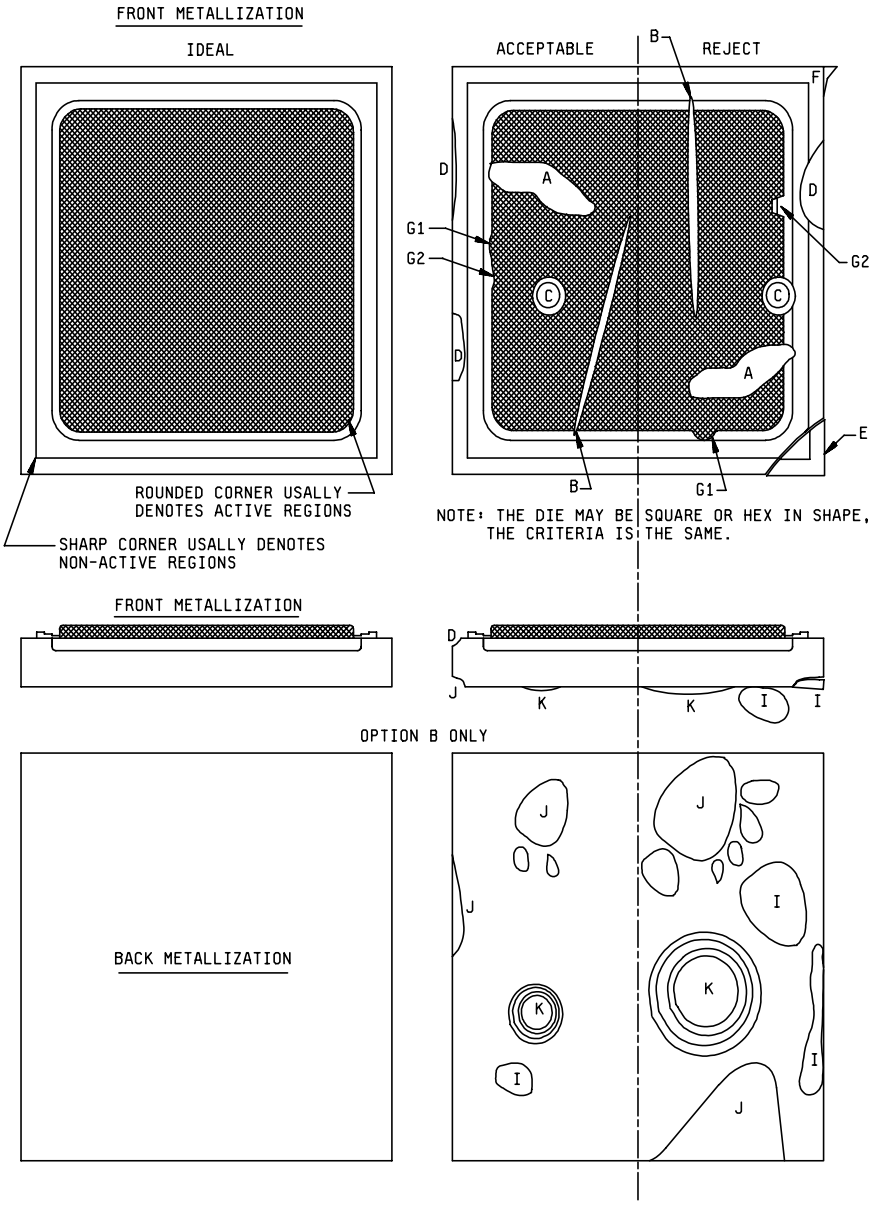

Reject criteria

Smears (A), scratches (B) or probe marks (C) may not extrude metal outside junction boundary region.

Edge chipping or cracks (D) may not extend beyond 50 percent between chip edge and junction boundary.

Missing pieces (E) extending beyond 50 percent to junction boundary or additional attached pieces (F) defined by an incomplete cut or scribe line are not permitted.

Additional front islands of metallization crossing any diffusion line (G1) or pulled back to reveal contact area or any non passivated region (G2). Note that G2 does not apply to chips designed without requiring metal passivation overlay. In this latter exception, much or all of the oxide window will be exposed as a legal part of the design.

Cracks (not illustrated) must not extend under the metalized areas and must not be present inside any of the active regions. Sharp corner usually denotes non-active regions

Backside

Backside contamination and foreign material (I), either firmly or loosely attached, exceeding 10 percent of total area.

Missing backside metal (J) exceeding 20 percent of total area.

Blisters (K) in metalization exceeding 10 percent of total area.

FIGURE 2073-6. Low voltage planar diode.

Source: https://assist.dla.mil -- Downloaded: 2016-12-03T20:24Z
Check the source to verify that this is the current version before use.

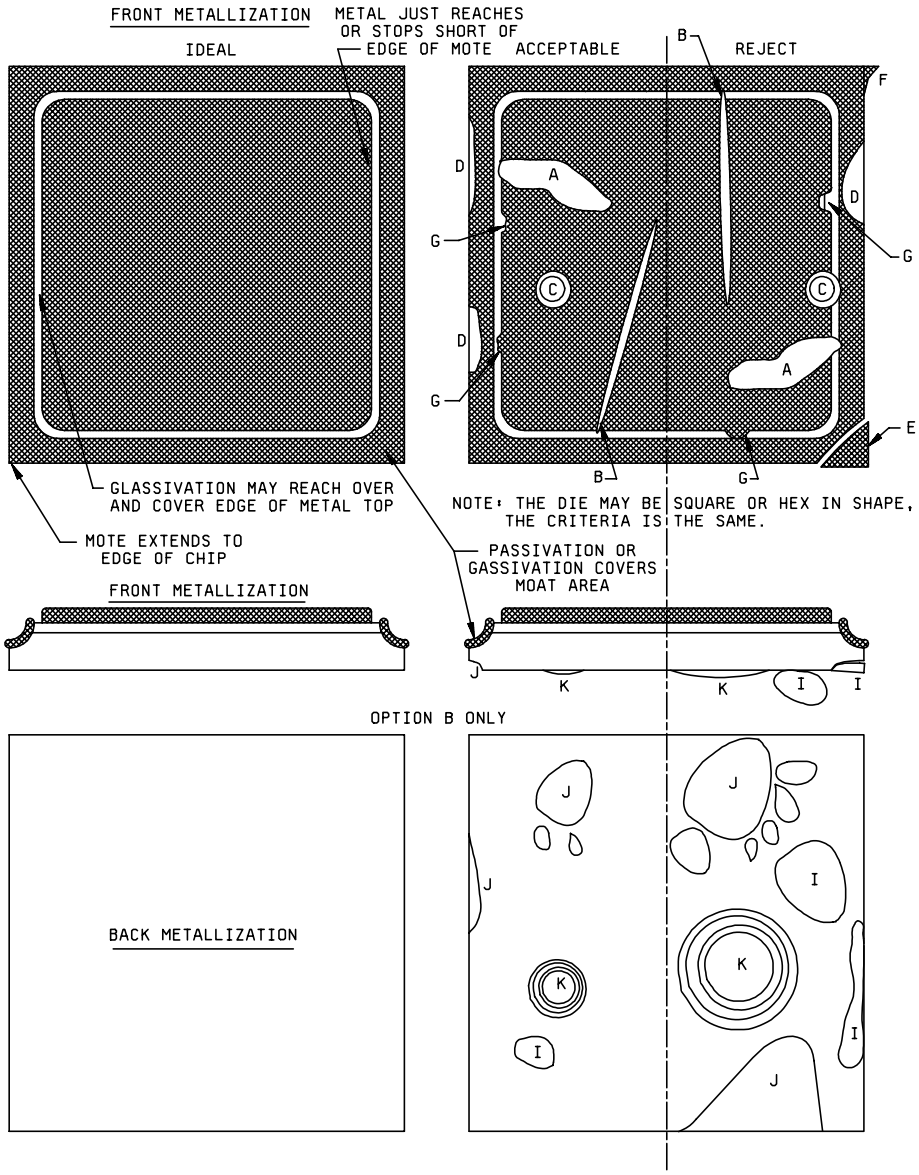

Reject criteria

Smears (A), scratches (B) or probe marks (C) may not extrude metal outside metalized region over moat edge.

Edge chipping (D) may not extend into moat area more than 50 percent.

Missing pieces (E) extending beyond 50 percent across moat or additional attached pieces (F) defined by an incomplete cut or scribe line are not permitted.

Additional front metallization extending over into the moat (G) or pulled back to reveal contact area or any non passivated active region.

Cracks (not illustrated) must not extend under the metalized area no more than 50 percent of the way across the moat from the outside

Backside

Backside contamination and foreign material (I), either firmly or loosely attached, exceeding 10 percent of total area.

Missing backside metal (J) exceeding 20 percent of total area.

Blisters (K) in metalization exceeding 10 percent of total area

FIGURE 2073-7. Outside moat mesa diodes (moat extends from mesa to edge of die).

Source: https://assist.dla.mil -- Downloaded: 2016-12-03T20:24Z
Check the source to verify that this is the current version before use.

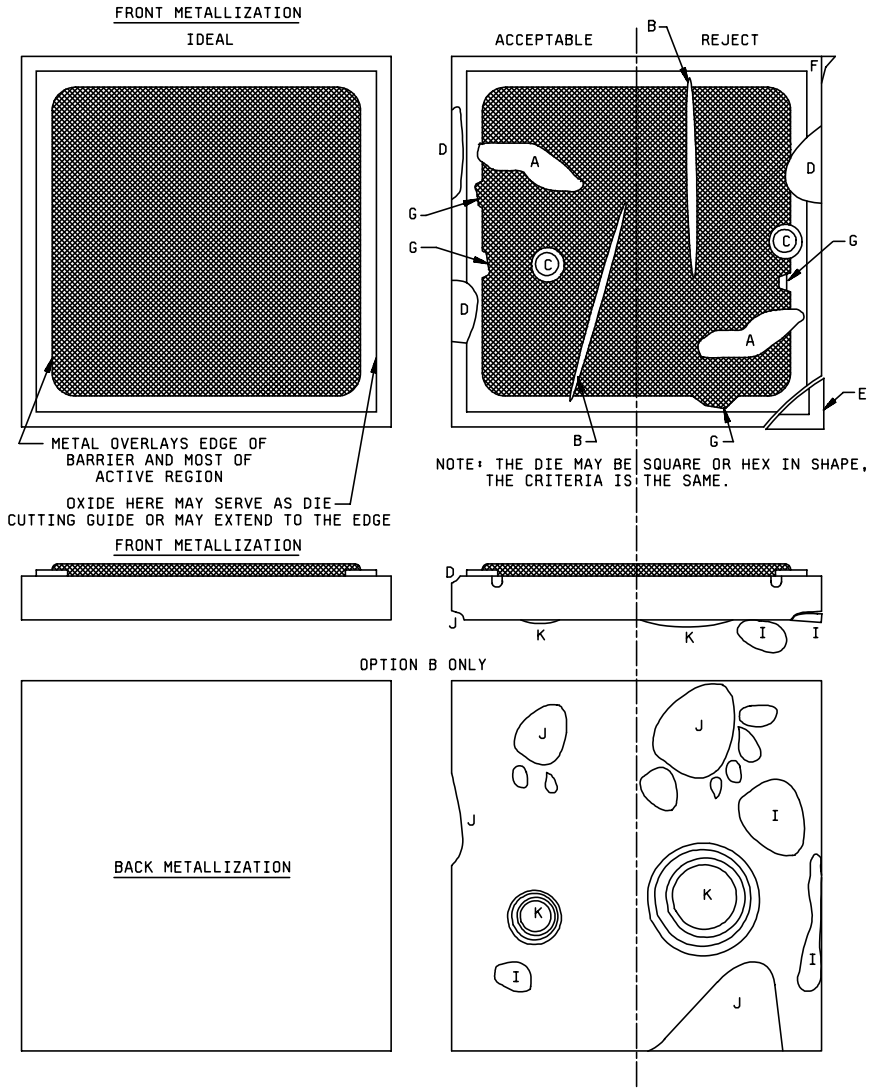

Reject criteria

Smears (A), scratches (B) or probe marks (C) may not extrude metal outside metalized region more than 50 percent to the next geometric boundry.

Edge chipping (D) may not extend into metallization.

Missing pieces (E) extending more than 50 percent of distance from chip edge and metalization or additional attached pieces (F) that exceed chip dimensional specifications are not permitted.

Additional front metallization extending 50 percent or more to the next geometric boundary (G) or pulled back to reveal contact area or any non-passivated barrier region.

Cracks (not illustrated) must not extend under the metalized areas and must not be present inside any of the active regions.

Backside

Backside contamination and foreign material (I), either firmly or loosely attached, exceeding 10 percent of total area.

Missing backside metal (J) exceeding 20 percent of total area.

Blisters (K) in metalization exceeding 10 percent of total area.

FIGURE 2073-8. Schottky barrier diodes (metal overlays barrier edge and active area field plate).

Source: https://assist.dla.mil -- Downloaded: 2016-12-03T20:24Z
Check the source to verify that this is the current version before use.

METHOD 3131.3

THERMAL IMPEDANCE (RESPONSE) TESTING OF TRANSISTORS (DELTA BASE – EMITTER VOLTAGE METHOD)

1. Purpose. The purpose of this test is to determine the thermal performance of transistor devices. This can be done in two ways, steady-state thermal impedance or thermal transient testing. Steady-state thermal impedance (referred to as thermal resistance) determines the overall thermal performance of devices. A production-oriented screening process, referred to as thermal transient testing, is a subset of thermal impedance testing and determines the ability of the transistor chip-to-header interface to transfer heat from the chip to the header, and is a measure of the thermal quality of the die attachment. It is relevant to designs which use headers, or heat conducting plugs, with mass and thermal conductivity allowing effective discrimination of poor die attachments. This is particularly true with power devices. The method can be applied to small signal, power, switching and Darlington transistors. This method is intended for production monitoring, incoming inspection, and pre-burn in screening applications. The measurement current (IM) must be large enough to ensure that the Darlington output transistor is biased into the linear conduction mode of the temperature sensing measurement periods of the thermal test.

1.1 Background and scope for thermal transient testing. Steady-state thermal response (transient thermal impedance) of semiconductor devices are sensitive to the presence of voids in the die attachment material between the semiconductor chip and package since voids impede the flow of heat from the chip to the substrate (package). Due to the difference in the thermal time constants of the chip and package, the measurement of transient thermal response can be made more sensitive to the presence of voids than can the measurement of steady-state thermal response. This is because the chip thermal time constant is generally several orders of magnitude shorter than that of the package. Thus, the heating power pulse width can be selected so that only the chip and the chip-to-substrate interface are heated during the pulse by using a pulse width somewhat greater than the chip thermal time constant but less than that of the substrate. Heating power pulse widths ranging from 1 to 400 ms for various package designs have been found to satisfy this criterion. This enables the detection of voids to be greatly enhanced, with the added advantage of not having to heat sink the device under test (DUT). Thus, the transient thermal impedance or thermal response techniques are less time consuming than the measurement of thermal resistance for use as a manufacturing screen, process control, or incoming inspection measure for die attachment integrity evaluation.

2. Definitions. The following symbols and terminology shall apply for the purpose of this test method:

a. V_{BE}: The forward biased base-emitter junction voltage of the DUT used for junction temperature sensing.

V_{BEi}: The initial V_{BE} value during application of measurement current (IM) and before application of heating power.

V_{BEf}: The final V_{BE} value during the sample window time (t SW) after application and subsequent removal of heating power.

b. ΔV_{BE}: The change in, V_{BE}, (VBEi-VBEf) due to the application of heating power to the DUT.

c. I_H: The collector current applied to the DUT during the heating period.

d. V_{CE}: The voltage between the collector and emitter. VCE is constant throughout the test.

e. P_H: The heating power applied the DFUT. $P_H = I_H . x$ VCE.

f. t_H: The duration of the heating power pulse P_H.

Source: https://assist.dla.mil -- Downloaded: 2016-12-03T20:24Z
Check the source to verify that this is the current version before use.

g. ti: The time after application of the measurement current (IM) and before application of the heating power pulse.

h. I_M: The measurement current applied to forward bias the junction for measurement of V_{BE}.

i. t_{MD}: Measurement delay time is the time from the end of the heating power pulse to the beginning of the sample window time (tSW). Delay must be sufficient in length to allow for attenuation of switching transients to occur. The delay time will vary according to the length of the cable to test fixture and associated fixture inductances.

j. t_{SW}: Sample window time during which final V_{BE} measurement is made. The value of t_{SW} should be small; and occur at precisely the conclusion of tMD. It can approach zero if an oscilloscope is used for manual measurements and no transient effects are present.

k. VTC: Voltage-temperature coefficient of V_{BE} with respect to T_J at a fixed value of I_M; in mV/°C.

l. K: Thermal calibration factor equal to the reciprocal of VTC; in °C/mV.

m. CU: The comparison unit, consisting of ΔV_{BE} divided by V_{BE}, that is used to normalize the transient thermal response for variations in power dissipation; in units of mV/V.

n. T_J: The DUT junction temperature.

o. ΔT_J: The change in T_J caused by the application of P_H for a time equal to t_H.

p. $Z_{\theta JX}$: Thermal impedance from device junction to a time defined reference point; in units of °C/W.

q. $Z_{\theta JC}$: Thermal impedance from device junction to a point on the outside surface of the case immediately adjacent to the device chip measured using time equal time constant of device; in units of °C/W.

r. $R_{\theta JX}$: Thermal resistance from device junction to a defined reference point; in units of °C/W.

s. $R_{\theta JC}$: Thermal resistance from device junction to a point on the outside surface of the case immediately adjacent to the device chip; in units of °C/W.

t. $R_{\theta JA}$: Thermal resistance from device junction to an ambient (world); in units of °C/W.

u. TSP: The temperature sensitive parameter; V_{BE}.

3. Apparatus. The apparatus required for this test shall include the following, configured as shown on figure 3131-1, as applicable to the specified test procedure:

a. A constant current source capable of adjustment to the desired value of I_H and able to supply the V_{BE} value required by the DUT. The current source should be able to maintain the desired current to within ±2 percent during the entire length of heating time.

b. A constant current source to supply I_M with sufficient voltage compliance to turn the TSP junction fully on.

Source: https://assist.dla.mil -- Downloaded: 2016-12-03T20:24Z
Check the source to verify that this is the current version before use.

c. An electronic switch capable of switching between the heating period conditions and measurement conditions in a time frame short enough to avoid DUT cooling during the transition; this typically requires switching in the microsecond or tens of microseconds range.

d. A voltage measurement circuit capable of accurately making the V_{BEf} measurement within the time frame with millivolt resolution.

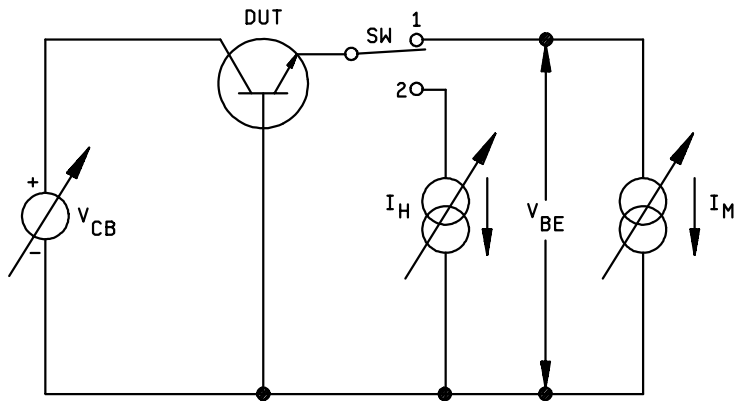

FIGURE 3131-1. Thermal impedance testing setup for transistors.

4. Test operation.

4.1 General description. The test begins with the adjustment of I_M and I_H to the desired values. The value of I_H is usually at least 50 times greater than the value of I_M. Then with the electronic switch in position 1, the value of V_{BEi} is measured. The switch is then moved to position 2 for a length of time equal to t_H and the value of V_{BE} is measured. Finally, at the conclusion of t_H, the switch is again moved to position 1 and the V_{BEf} value is measured within a time period defined by t_{MD} (or $t_{MD} + t_{SW}$, depending on the definitions stated previously). The two current sources are then turned off at the completion of the test.

4.2 Notes.

a. Some test equipment may provide a ΔVBE directly instead of V_{BEi} and V_{BEf}; this is an acceptable alternative. Record the value of ΔV_{BE}.

b. Some test equipment may provide $Z_{\theta JX}$ directly instead of V_{BEi} and V_{BEf} for thermal resistance calculations; this is an acceptable alternative. Record the value of $Z_{\theta JX}$.

c. Alternative waveforms, as may be generated by ATE using the general principles of this method, may be used upon approval of the qualifying activity.

Source: https://assist.dla.mil -- Downloaded: 2016-12-03T20:24Z
Check the source to verify that this is the current version before use.

5. Acceptance limit.

5.1 General discussion. Variations in transistor characteristics from one manufacturer to another cause difficulty in establishing a single acceptance limit for all transistors tested to a given specification. Ideally, a single acceptance limit value for ΔV_{BE} would be the simplest approach. However, different design, materials, and processes can alter the resultant ΔV_{BE} value for a given set of test conditions. Listed below are several different approaches to defining acceptance limits. The ΔV_{BE} limit is the simplest approach and is usually selected for screening purposes. Paragraphs 5.3 through 5.6 require increasingly greater detail or effort.

5.2 ΔV_{BE} limit. A single ΔV_{BE} limit is practical if the K factor and V_{BE} values for all transistors tested to a given specification are nearly identical. Since these values may be different for different manufacturers, the use of different limits is likely to more accurately achieve the desired intent. (A lower limit does not indicate a better die bond when comparing different product sources.) The transistor specifications would list the following test conditions and measurement parameters:

a. I_H (in A).

b. t_H (in ms).

c. I_M (in mA).

d. t_{MD} (in µs).

e. t_{SW} (in µs).

f. ΔV_{BE} (maximum limit value, in mV).

5.3 ΔT_J limit. (Much more involved than ΔVBE , but useful for examining questionable devices.) Since ΔT_J is the product of K (in accordance with 6.) and ΔV_{BE}, this approach is the same as defining a maximum acceptable junction temperature rise for a given set of test conditions.

5.4 CU limit. (Slightly more involved than ΔT_J.) The ΔT_J limit approach described above does not take into account potential power dissipation variations between devices. The V_{BE} value can vary, depending on chip design and size, thus causing the power dissipation during the heating time to be different from device to device. This variation will be small within a lot of devices produced by a single manufacturer but may be large between manufacturers. A CU limit value takes into account variations in power dissipation due to differences in V_{BE} by dividing the ΔV_{BE} value by V_{BE}.

5.5 (K•CU) limit. (Slightly more involved but provides greater detail.) This is a combinational approach that takes into account both K factor and power dissipation variations between devices.

Source: https://assist.dla.mil -- Downloaded: 2016-12-03T20:24Z
Check the source to verify that this is the current version before use.

5.6 $Z_{\theta JX}$ limit. (For full characterization; not required for screening purposes, but preferred if the proper ATE is available.) The thermal impedance approach uses an absolute magnitude value specification that overcomes the problems associated with the other approaches. Thermal impedance is time dependent and is calculated as follows:

$$Z_{\Theta JX} = \frac{\Delta T_J}{P_D} = \left| \frac{(K)(\Delta V_{BE})}{(I_H)(V_H)} \right| {}^{\circ}\text{C/W}$$

5.7 $R_{\theta JX}$ limit. (For thermal resistance specification testing.) The thermal resistance to some defined point, such as the case, is an absolute magnitude value specification used for equilibrium conditions. The t_H heating time must therefore be extended to appreciably longer times (typically 20 to 50 seconds). In the example of $R_{\theta JC}$ measurements, the case must be carefully stabilized and monitored in temperature which requires an infinite heat sink for optimum results. The ΔT_J is the difference in junction temperature to the case temperature for the example of $R_{\theta JC}$.

$$R_{\Theta JX} = \frac{\Delta T_J}{P_D} = \left| \frac{(K)(\Delta V_{BE})}{(I_H)(V_H)} \right| {}^{\circ}\text{C/W}$$

5.8 General comment for thermal transient testing. One potential problem in using the thermal transient testing approach lies in trying to make accurate enough measurements with sufficient resolution to distinguish between acceptable and nonacceptable transistors. As the DUT current handling capability increases, the thermal impedance under transient conditions will become a very small value. This raises the potential for rejecting good devices and accepting bad ones. Higher I_H values must be used in this case.

6. Measurement of the TSP V_{BE}. The calibration of V_{BE} versus T_J is accomplished by monitoring V_{BE} for the required value of I_M as the environmental temperature (and thus the DUT temperature), and is varied by external heating. It is not required if the acceptance limit is ΔV_{BE} (see 5.2), but is relevant to the other acceptance criteria (see 5.3 through 5.6). The magnitude of I_M shall be chosen so that V_{BE} is a linearly decreasing function over the normal T_J range of the device. I_M must be large enough to ensure that the base-emitter junction is turned on but not large enough to cause significant self-heating. An example of the measurement method and resulting calibration curve is shown on figure 3131-2.

Source: https://assist.dla.mil -- Downloaded: 2016-12-03T20:24Z
Check the source to verify that this is the current version before use.

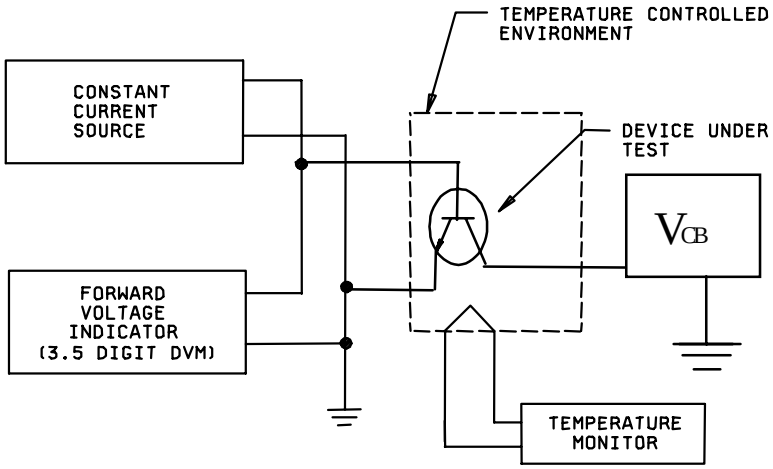

Step 1: Measure V_{BE1} at T_{J1} using I_M
Step 2: Measure V_{BE2} at T_{J2} using I_M

Step 3: $K = \left| \frac{T_{J2} - T_{J1}}{V_{BE2} - V_{BE1}} \right| {}^{\circ}C/mV$

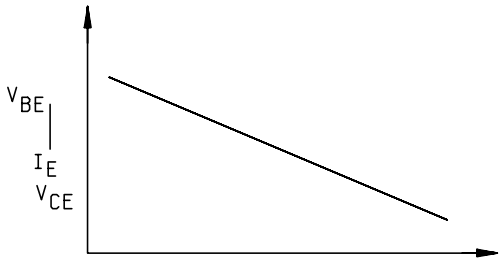

I_M: Must be large enough to overcome surface leakage effects but small enough not to cause significant self-heating.

T_J: Is externally applied (e.g., via oven, liquid) environment.

FIGURE 3131-2. Example curve of V_{BE} versus T_J.

Source: https://assist.dla.mil -- Downloaded: 2016-12-03T20:24Z
Check the source to verify that this is the current version before use.

A calibration factor K (which is the reciprocal of the slope of the curve on figure 3131-2) can be defined as:

$$K = \left| \frac{T_{J2} - T_{J1}}{V_{BE2} - V_{BE1}} \right| \ °C/mV$$

The K factor is used to calibrate the device under test such that the measured forward voltage drop corresponds to the temperature of the junction at a given bias condition. In order to ensure accurate results, the bias conditions used to determine the K factor must be chosen such that the application is duplicated. Therefore, the results will be unique for each particular biasing condition and should be reestablished for different values of base and/or collector currents (IF for diodes). This method should be used for each of the following conditions: Thermal impedance, burn-in, and life tests. Verify actual TJ seen by a device in field applications.

It has been found experimentally that the K-factor variation for all devices within a given device type class is small. The usual procedure is to perform a K factor calibration on a 10 piece to 12 piece sample from a device lot and determine the average K and standard deviation (σ). If σ is less than or equal to three percent of the average value of K, then the average value of K can be used for all devices within the lot. If σ is greater than three percent of the average value of K, then all the devices in the lot shall be calibrated and the individual values of K shall be used in determining device acceptance. As an alternative to using individual values of K, the manufacture may establish internal limits unique to their product that ensures atypical product removal from the population (lot-to-lot and within-the-lot). The manufacturer shall use statistic techniques to establish the limits to the satisfaction of the government.

7. Establishment of test conditions and acceptance limits. Thermal resistance measurements require that I_H be equal to the required value stated in the device specifications, typically at rated current or higher. Values for t_H, t_{MD}, and heat sink conditions are also taken from the device specifications. The steps shown below are primarily for thermal transient testing and thermal characterization purposes.

The following steps describe how to set up the test conditions and determine the acceptance limits for implementing the transient thermal test for die attachment evaluation using the apparatus and definitions stated above.

7.1 Initial device testing procedure. The following steps describe in detail how to set up the apparatus described previously for proper testing of various transistors. Since this procedure thermally characterizes the transistor out to a point in heating time required to ensure heat propagation into the case (i.e., the $R_{\theta JX}$ condition), an appropriate heat sink should be used or the case temperature should be monitored.

Step 1: From a 20 to 25 piece sample, pick any one diode to start the setup process. Set up the test apparatus as follows:

I_H = 1.0 A	(Or some other desired value near the DUTs normal operating current, typically higher for power transistors.
t_H = 10-50 ms	Unless otherwise specified, for most devices rated up to 15 W power dissipation.
50 - 100 ms	Unless otherwise specified, for most devices rated up to 200 W power dissipation.
≥ 250 ms	For steady-state thermal resistance measurement. The pulse must be shown to correlate to steady-state conditions before it can be substituted for steady-state condition.

Source: https://assist.dla.mil -- Downloaded: 2016-12-03T20:24Z
Check the source to verify that this is the current version before use.

t_{MD} = 100 µs max — A larger value may be required on power devices with inductive package elements which generate nonthermal electrical transients; unless otherwise specified, this would be observed in the t_3 region of figure 3131-3.

I_M = 10 mA — (Or some nominal value approximately two percent, or less, of I_H.)

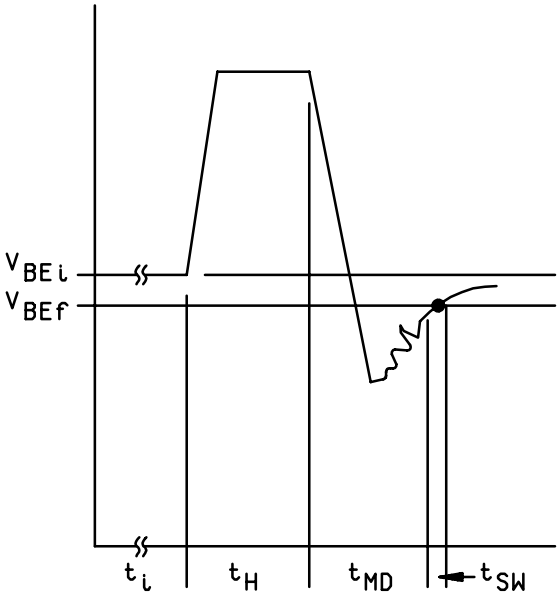

FIGURE 3131-3. Thermal impedance testing waveforms.

Source: https://assist.dla.mil -- Downloaded: 2016-12-03T20:24Z
Check the source to verify that this is the current version before use.

Step 2: Insert device into the apparatus test fixture and initiate a test. (For best results, a test fixture that offers some form of heat sinking would be desirable. Heat sinking is not needed if either the power dissipation during the test is well within the diode's free-air rating or the maximum heating time is limited to less than that required for the heat to propagate through the case.)

Step 3: If ΔV_{BE} is in the 15 to 80 mV range then proceed to the next step. This range approximately corresponds to a junction temperature change of roughly +10°C to +50°C and is sufficient for initial comparison purposes.

If ΔV_{BE} is less than 15 mV, return to 7.1, step 1 and increase heating power into device by increasing I_H.

If ΔV_{BE} is greater than 80 mV, approximately corresponding to a junction temperature change greater than +50°C, it would be desirable to reduce the heating power by returning to 7.1, step 1 and reducing I_H.

NOTE: The test equipment shall be capable of resolving ΔV_{BE} to within five percent. If not, the higher value of ΔV_{BE} must be selected until the five percent tolerance is met. Two different devices can have the same junction temperature rise even when P_H is different, due to widely differing V_{BE}. Within a given lot, however, a higher V_{BE} is more likely to result in a higher junction temperature rise. For such examples, this screen can be more accurately accomplished using the CU value. As defined in 2., CU provides a comparison unit that takes into account different device V_{BE} values for a given I_H test condition.

Step 4: Test each of the sample devices and record the data detailed in 8.1.

Step 5: Select out the devices with the highest and lowest values of CU or $Z_{\theta JX}$ and put the remaining devices aside.

The ΔV_{BE} values can be used instead of CU or $Z_{\theta JX}$ if the measured values of V_{BE} are very tightly grouped around the average value.

Step 6: Using the devices from 7.1, step 5, collect and plot the heating curve data for the two devices in a manner similar to the examples shown on figure 3131-4.

Step 7: Interpretation of the heating curves is the next step. Realizing that the thermal characteristics of identical chips should be the same if the heating time (t_H) is less than or equal to the thermal time constant of the chip, the two curves should start out the same for the low values of t_H. Non-identical chips (thinner or smaller in cross section) will have completely different curves, even at the smaller values of t_H. As the value of t_H is increased, thereby exceeding the chip thermal constant, heat will have propagated through the chip into the die attachment region. Since the heating curve devices of 7.1, step 5 were specifically chosen for their difference, the curves of figure 3131-4 diverge after t_H reaches a value where the die attachment variance has an affect on the device junction temperature. Increasing t_H further will probably result in a flattening of the curve as the heating propagates in the device package. If the device package has little thermal mass and is not well mounted to a good heat sink, the curve will not flatten very much, but will show a definite change in slope.

Source: https://assist.dla.mil -- Downloaded: 2016-12-03T20:24Z
Check the source to verify that this is the current version before use.

Step 8: Using the heating curve, select the appropriate value of t_H to correspond to the inflection point in the transition region between heat in the chip and heat in the package.

If there are several different elements in the heat flow path: Chip, die attachment, substrate, substrate attach, and package, for example in a hybrid, there will be several plateaus and transitions in the heating curve. Appropriate selection of t_H will optimize evaluation sensitivity to other attachment areas.

Step 9: Return to the apparatus and set t_H equal to the value determined from 7.1, step 8.

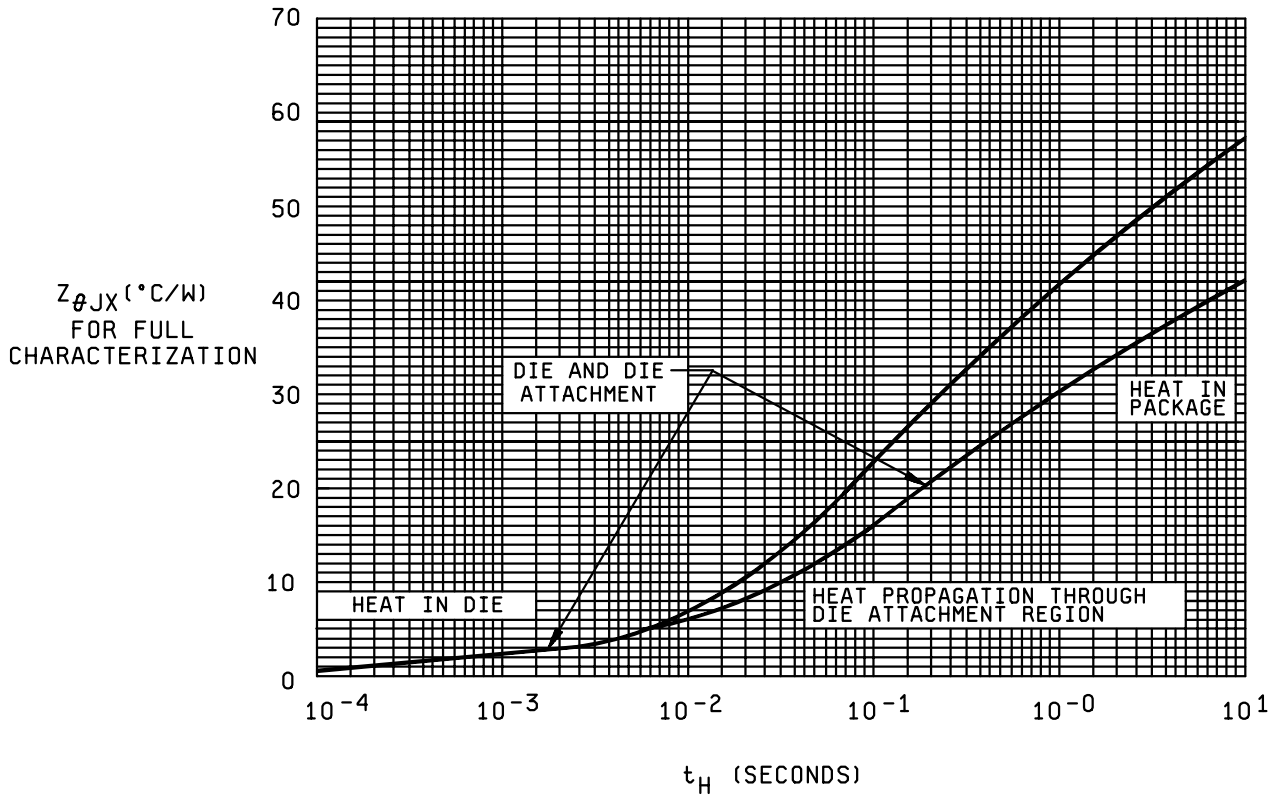

FIGURE 3131-4. Heating curves for two extreme devices.

Source: https://assist.dla.mil -- Downloaded: 2016-12-03T20:24Z
Check the source to verify that this is the current version before use.

Step 10: Because the selected value of t_H is much less than that for thermal equilibrium, it is possible to significantly increase the heating power without degrading or destroying the device. The increased power dissipation within the DUT will result in higher ΔV_{BE} or CU values that will make determination of acceptable and nonacceptable devices much easier.

Step 11: The pass/fail limit, the cut-off point between acceptable and nonacceptable devices, can be established in a variety of ways:

a. Correlation to other die attachment evaluation methods, such as die shear and x-ray, while these two methods have little actual value from a thermal point of view, they do represent standardization methods as described in various military standards.

b. Maximum allowable junction temperature variations between devices, since the relationship between ΔT_J and ΔV_{BE} is about 0.5°C/mV for forward bias testing, or 0.25C/mV for Darlington transistors, the junction temperature spread between devices can be easily determined. The T_J predicts reliability. Conversely, the T_J spread necessary to meet the reliability projections can be translated to a ΔV_{BE} or CU value for pass/fail criteria.

To fully utilize this approach, it will be necessary to calibrate the devices for the exact value of the T_J to V_{BE} characteristic. The characteristic's slope, commonly referred to as K factor, is easily measured on a sample basis using a voltmeter, environmental chamber, temperature indicator, and a power supply setup as described in 6. A simple set of equations yield the junction temperature once K and ΔV_{BE} are known:

$$\Delta T_J = (K)\ (\Delta VBE)$$

$$T_J = T_A + \Delta T_J$$

Where: T_A is the ambient or reference temperature. For thermal transient test conditions, this temperature is usually equivalent to case temperature (T_C) for case mounted devices.

c. Statistically from a 20 to 25 device sample the distribution of ΔV_{BE} or CU values should be a normal one with defective devices out of the normal range. Figure 3131-5 shows a ΔV_{BE} distribution for a sample lot of transistors. NOTE: The left-hand side of the histogram envelope is fairly well defined but the other side is greatly skewed to the right. This comes about because the left-hand side is constrained by the absolutely best heat flow that can be obtained with a given chip assembly material and process unless a test method error is introduced. The other side has no such constraints because there is no limit as to how poorly a chip is mounted.

Source: https://assist.dla.mil -- Downloaded: 2016-12-03T20:24Z
Check the source to verify that this is the current version before use.

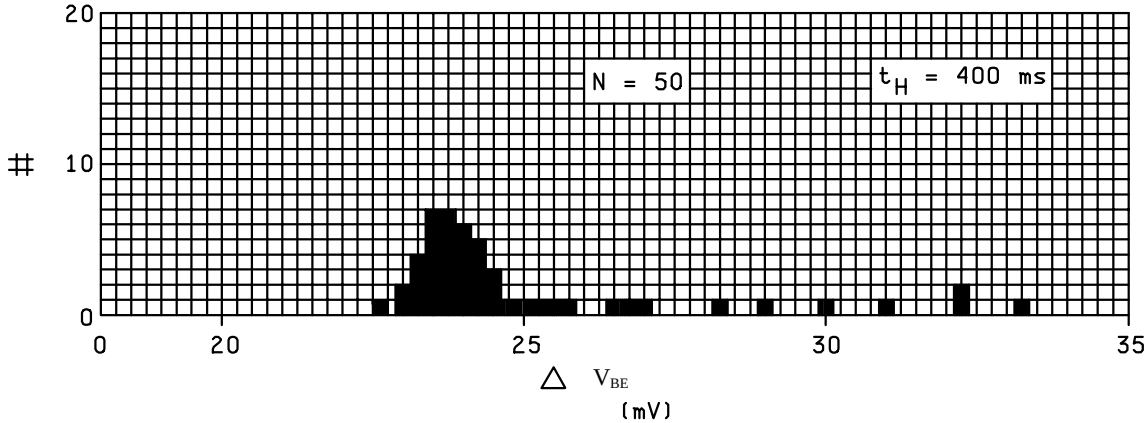

FIGURE 3131-5. Typical ΔV_{BE} distribution.

The usual rule of thumb in setting the maximum limit for ΔV_{BE} , CU, or $Z_{\theta JX}$ is to use the distribution average value and three standard deviations (σ). For example:

$$|(\Delta V_{BE})| = \overline{\Delta V}_{BE} + X\sigma$$

high
limit

$$|(CU)| = \overline{CU} + X\sigma$$

high
limit

$$|(Z_{\theta JX})| = \overline{Z}_{\theta JX} + X\sigma$$

high
limit

Where: X = 3 in most cases and $\overline{\Delta V}_{BE}$, $\overline{\Delta CU}$, and $\overline{\Delta Z}_{\theta JX}$ are the average distribution values.

The statistical data required is obtained by testing 25 or more devices under the conditions of 7.1, step 11.

The maximum limit determined from this approach should be correlated to the transistor's specified thermal resistance. This will ensure that the ΔV_{BE} or CU limits do not pass diodes that would fail the thermal resistance or transient thermal impedance requirements.

Source: https://assist.dla.mil -- Downloaded: 2016-12-03T20:24Z
Check the source to verify that this is the current version before use.

Step 12: Once the test conditions and pass/fail limit have been determined, it is necessary only to record this information for future testing requirements of the same device in the same package. It is also recommended that a minimum limit is established to ensure a test method error or other anomaly is investigated.

Step 13: After the pass/fail limits are established, there shall be verification they correllate to good and bad bonded devices or the electrical properties such as surge.

The steps listed hereto are conveniently summarized in table 3131-I.

TABLE 3131-I. Summary of test procedure steps.

General description		Steps	Comments
A	Initial setup	1 through 4	Approximate instrument settings to find variations among devices in 10 to 15 piece sample.
B	Heating curve generation	5 through 6	Using highest and lowest reading devices, generate heating curves.
C	Heating curve interpretation	7 through 9	Heating curve is used to find more appropriate value for t_H corresponding to heat in the die attachment area (for some other desired interface in the heat flow path).
D	Final setup	10	Heating power applied during t_H is increased in order to improve measurement sensitivity to variations among devices.
E	Pass-fail determination	11 through 12	A variety of methods is available such as JESD 34 for setting the fail limit; the statistical approach is the fastest and easiest to implement.
F	Verification	13	Mechanical / Electrical correlation

7.2 Routine device thermal transient testing procedure. Once the proper control settings have been determined for a particular device type from a given manufacturing process or vendor, repeated testing of that device type simply requires that the same test conditions be used as previously determined. New device types or the same devices manufactured with a different process will require a repeat of 7.1 for proper thermal transient test conditions.

Source: https://assist.dla.mil -- Downloaded: 2016-12-03T20:24Z
Check the source to verify that this is the current version before use.

8. Test conditions and measurements to be specified and recorded.

8.1 Thermal transient and equilibrium measurements.

8.1.1 Test conditions. Specify the following test conditions:

a. I_M measuring current ___ mA

b. I_H heating current ___ A

c. t_H heating time ___ ms

d. t_{MD} measurement time delay ___µs

e. t_{SW} sample window time __ µs

8.1.2 Data. Record the following data:

a. V_{BEi} initial forward voltage ___V

b. V_H heating voltage ___V

c. V_{BEf} final forward voltage ___V

(NOTE: Some test equipment may provide a ΔV_{BE} instead of V_{BEi} and V_{BEf}; this is an acceptable alternative. Record the value of ΔV_{BE}.

Some test equipment may provide direct display of calculated CU or $Z_{\theta JX}$; this is an acceptable alternative. Record the value of CU or $Z_{\theta JX}$.

8.2 K factor calibration. (Optional for criteria 8.3a or 8.3b, mandatory for 8.3c, 8.3d, or 8.3e.)

8.3 Test conditions. Specify the following test conditions:

a. I_M current magnitude ___mA

b. Initial junction temperature ___°C

c. Initial V_{BE} voltage ___mV

d. Final junction temperature ___°C

e. Final V_{BE} voltage ___mV

Source: https://assist.dla.mil -- Downloaded: 2016-12-03T20:24Z
Check the source to verify that this is the current version before use.

8.4 K factor. Calculate K factor in accordance with the following equation:

$$K = \left| \frac{T_{J2} - T_{J1}}{V_{BE2} - V_{BE1}} \right| \ °C/mV$$

K factor ___°C/mV

8.5 Specification limit calculations. One or more of the following should be measured or calculated, as called for on the device specification (see 5.1):

ΔV_{BE}	___mV
CU	___mV/V
ΔT_J	___°C
K•CU	___°C/V
$Z_{\theta JX}$	___°C/W
$R_{\theta JX}$	___°C/W

Source: https://assist.dla.mil -- Downloaded: 2016-12-03T20:24Z
Check the source to verify that this is the current version before use.

METHOD 3471.2

GATE CHARGE

1. Purpose. The purpose of this test is to measure the gate charge (Q_g) of power MOSFET's and IGBT. For the IGBT, replace the drain and source MOSFET designations with collector and emitter IGBT designations, D = C and S = E.

1.1 Definitions.

a. Test 1: $Q_{g(th)}$ is the gate charge that must be supplied to reach the minimum specified gate-source threshold voltage. It establishes line loci through the origin of a Q = f(V_{gs}) graph that is invariant with I_D, V_{DD}, and T_J. It establishes a relationship with capacitance (i.e.,

$$C_{GS} = \frac{Q_{g(th)}}{V_{g(th)}} = \frac{Q_{gs}}{V_{GP}}).$$

b. Test 2: $Q_{g(on)}$ is the gate charge that must be supplied to reach the gate-source voltage specified for the device $r_{DS(on)}$ measurement.

c. Test 3: $Q_{gm(on)}$ is the gate charge that must be supplied to the device to reach the maximum rated gate-source voltage. $Q_{gm(on)}$ and $Q_{g(on)}$ establish line loci on a Q = f(V_{gs}) graph that may be considered invariant with I_D and T_J. The slope of the loci is invariant with V_{DD}, while the intercept with the Q axis is variant with V_{DD}.

d. Test 4: V_{GP} is the gate voltage necessary to support a specified drain current. V_{GP}, I_D is a point on the device gate voltage, drain current transfer characteristic. V_{GP} is variant with I_D and T_J. It may be measured one of two ways:

(1) Using a dc parameter test set employing a circuit similar to that described in method 3474 for SOA setting $V_{DD} > V_{GS}$.

(2) Using a gate charge test circuit employing a constant I_D drain load.

e. Test 5: Q_{gs} is the charge required by C_{GS} to reach a specified I_D. It is variant with I_D and T_J. It is measured in a gate charge test circuit employing a constant drain current load.

f. Test 6: Q_{gd} is the charge supplied to the drain from the gate to change the drain voltage under constant drain current conditions. It is variant with V_{DD} and may be considered invariant with I_D and T_J. It can be related to an effective gate-drain capacitance (i.e., $C_{rss} = Q_{gd}/V_{DD}$). The effective input capacitance is: $C_{iss} = C_{GS} + C_{rss}$.

Source: https://assist.dla.mil -- Downloaded: 2016-12-03T20:24Z
Check the source to verify that this is the current version before use.

2. Test procedure.

a. The gate charge test is performed by driving the device gate with a constant current and measuring the resulting gate source voltage response. Constant gate current scales the gate source voltage, a function of time, to a function of coulombs. The value of gate current is chosen so that the device on-state is of the order of 100 µs.

The resulting gate-source voltage waveform is nonlinear and is representative of device behavior in the low to mid-frequency ranges. The slope of the generated response reflects the active device capacitance ($C_g = dQ_g / dV_{GS}$) as it varies during the switching transition. The input characteristic obtained from this test reflects the chip design while avoiding high frequency effects.

b. Figure 3471-1 is the test circuit schematic for testing an n-channel device. Polarities are simply reversed for a p-channel device.

c. Figure 3471-2 is an example of a practical embodiment of figure 3471-1. It illustrates a gate drive and instrument circuit that will test n-channel and p-channel devices.

d. The circuit has I_g programmability ranging from microamperes to milliamperes. For very large power MOSFET devices, the output I_g can be extended to tens of milliamperes by paralleling additional CA3280 devices.

e. The circuit provides an independent gate voltage clamp control to prevent voltage excursions from exceeding test device gate voltage ratings.

f. The CA3240E follower ensures that the smallest power devices will not be loaded by the oscilloscope. (R_{in} = 1.5 T Ω, I_{IN} = 10 pA, C_{IN} = 4 pF).

g. Gate charge is to be measured starting at zero gate voltage to a specified gate voltage value.

h. The magnitude of input step constant gate current I_g should be such that gate propagation and inductive effects are not evident. Typically this means the device on-state should be of the order of 100 µs.

i. The dynamic response, source impedance, and duty factor of the pulsed gate current generator are to be such that they do not materially affect the measurement.

j. Typically, the instrument used for a gate charge measurement is an oscilloscope with an input amplifier and probe. The switching response and probe impedance are to be such that they do not materially affect the measurement. Too low a probe resistance relative to the magnitude of I_g can significantly increase the apparent Q_g for a given V_{GS}. Too high a value of probe capacitance relative to the device C_{iss} will also increase the apparent Q_g for a given V_{GS}.

$$I_g = \frac{C_g \, dV_{GS}}{dt}, \; Q_g = C_g \, V_{GS}.$$

Source: https://assist.dla.mil -- Downloaded: 2016-12-03T20:24Z
Check the source to verify that this is the current version before use.

3. Summary. Figure 3471-3 illustrates the waveform and tests 1 through 4, condition A. Figure 3471-4 illustrates the waveform for tests 2, 4, 5, and 6, condition B. Only four of the six tests need be performed since the results of the remaining two are uniquely determined and may be calculated. Either condition A or condition B may be used.

3.1 Condition A.

3.1.1 Test 1, $Q_{g(th)}$.

a. Case temperature (T_C): +25°C.

b. Drain current: $I_D \geq 100$ mA.

c. Off-state drain voltage (V_{DD}): Between 50 percent and 80 percent of the device's rated drain-source breakdown voltage.

d. Load resistor (R_L): Equal to V_{DD}/I_D.

e. Gate current (I_g): Constant gate current such that the transition from off-state to on-state or on-state to off-state is of the order of 50 µs. The value of I_g varies with die size and ranges from 0.1 mA to 5 mA.

f. Gate to source voltage ($V_{g(th)\ min}$): The minimum rated gate-source threshold voltage.

g. Minimum off-state gate charge ($Q_{g(th)}$): A minimum and maximum limit shall be specified.

3.1.2 Test 2, $Q_{g(on)}$.

a. T_C, I_D, V_{DD}, R_L, I_g: Same as test 1 in 3.1.1.

b. V_{GS}: The gate-source voltage specified for the $r_{DS(on)}$ test, $V_{(on)}$.

c. On-state gate charge ($Q_{g(on)}$): A minimum and maximum limit shall be specified.

3.1.3 Test 3, $Q_{gm(on)}$.

a. T_C, I_D, V_{DD}, R_L, I_g: Same as test 1 in 3.1.1.

b. V_{GS}: The maximum rated gate-source voltage, $V_{(max)}$.

c. Maximum on-state gate charge ($Q_{gm(on)}$): A minimum and maximum limit shall be specified.

Source: https://assist.dla.mil -- Downloaded: 2016-12-03T20:24Z
Check the source to verify that this is the current version before use.

3.1.4 Test 4, V_{GP}. This test is to be performed on a dc parameter test set.

a. I_D = The continuous rated drain current at T_C = +25°C.

b. $V_{DS} > V_{GS}$. Normally $V_{DD} \approx 3\ V_{GS}$ is satisfactory.

c. The pulse width and duty factor are such that they do not materially affect the measurement.

d. V_{GP} shall be specified as a maximum and minimum.

e. T_C = +25°C.

3.1.5 Test 5, Q_{gs}; test 6, Q_{gd}. No tests are required. The calculations in terms of the results of tests 1 through 4 are as follows:

a. . $Q_{gs} = Q_{g(th)} \left[\frac{V_{GP}}{V_{g(th)\min}} \right]$.

b. Determine the fully on-state charge slope:

$$m = \left[\frac{V_{(\max)} - V_{(on)}}{Q_{gm(on)} - Q_{g(on)}} \right]$$

c. Determine the V_{gs} axis intercept:

$$b = V_{(on)} - m\ Q_{g(on)}.$$

d. . $Calculate\ Q_{gd}:\ Q_{gd} = \left[\frac{(V_{GP} - b)}{m} \right] - Q_{gs}$.

3.2 Condition B.

3.2.1 Test 2, $Q_{g(on)}$.

a. Case temperature (T_C): +25°C.

b. On-state drain current (I_D): The continuous rated drain current at T_C = +25°C.

c. Off-state drain voltage (V_{DD}): Between 50 percent and 80 percent of the device's rated drain-source breakdown voltage.

d. The drain load shall be such that the drain current will remain essentially constant.

e. Gate current (I_g): Same as test 1 in 3.1.1, condition A.

f. Gate to source voltage $V_{(on)}$: Same as test 1 in 3.1.1, condition A.

g. On-state gate charge ($Q_{g(on)}$): A minimum and maximum limit shall be specified.

Source: https://assist.dla.mil -- Downloaded: 2016-12-03T20:24Z
Check the source to verify that this is the current version before use.

3.2.2 Test 4, V_{GP}.

a. T_C, I_D, V_{DD}, Load, I_g: Same as test 2 in 3.2.1, condition B.

b. V_{GP}: This is the gate plateau voltage where Q_{gs} and Q_{gd} are measured. This voltage is essentially constant during the drain voltage transition when Q_{gd} is supplied from the gate to the drain under constant I_g, I_D conditions.

3.2.3 Test 5, Q_{gs}.

a. T_C, I_D, V_{DD}, Load, I_g: Same as test 2 in 3.2.1, condition B.

b. V_{GS}: Equal to V_{GP} at the specified I_D.

c. Q_{gs}: A minimum and maximum limit shall be specified.

3.2.4 Test 6, Q_{gd}.

a. T_C, I_D, V_{DD}, Load, I_g: Same as test 2 in 3.2.1, condition B.

b. V_{GS}: Equal to V_{GP} at the specified I_D.

c. Q_{gs}: A minimum and maximum limit shall be specified.

3.2.5 Test 1, $Q_{g(th)}$; test 3, $Q_{gm(on)}$. No tests are required. The calculations in terms of the results of test 2, 4, 5, and 6 are as follows:

a. $$Q_{g(th)} = Q_{gs}\left[\frac{V_{g(th)}\min}{V_{GP}}\right].$$

b. Determine the fully on-state charge slope:

$$m = \left[\frac{V_{(on)} - V_{GP}}{Q_{g(on)} - Q_{gs} - Q_{gd}}\right]$$

c. Determine the V_{gs} axis intercept:

$$b = V_{(on)} - m\,Q_{g(on)}.$$

d. Calculate $Q_{gm(on)}$:

$$Q_{gm(on)} = \frac{[V_{(\max)} - b]}{m}$$

Source: https://assist.dla.mil -- Downloaded: 2016-12-03T20:24Z
Check the source to verify that this is the current version before use.

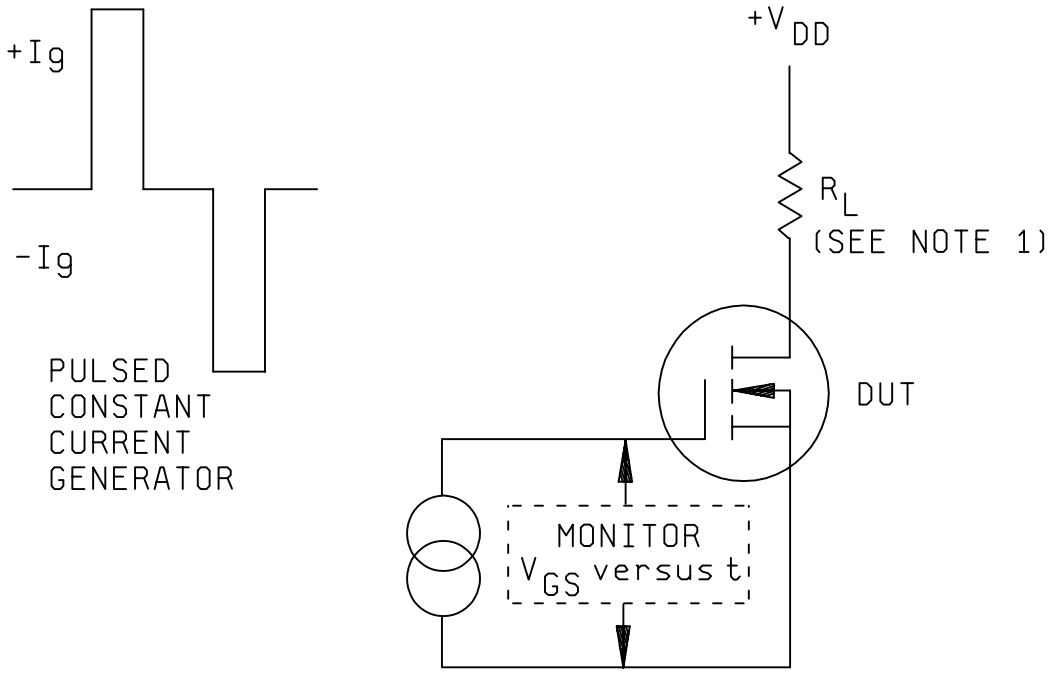

NOTES:
1. Condition B requires a constant drain current regulator.
2. $I_g \times t = Q_g$.

FIGURE 3471-1. Pulsed constant current generator.

Source: https://assist.dla.mil -- Downloaded: 2016-12-03T20:24Z
Check the source to verify that this is the current version before use.

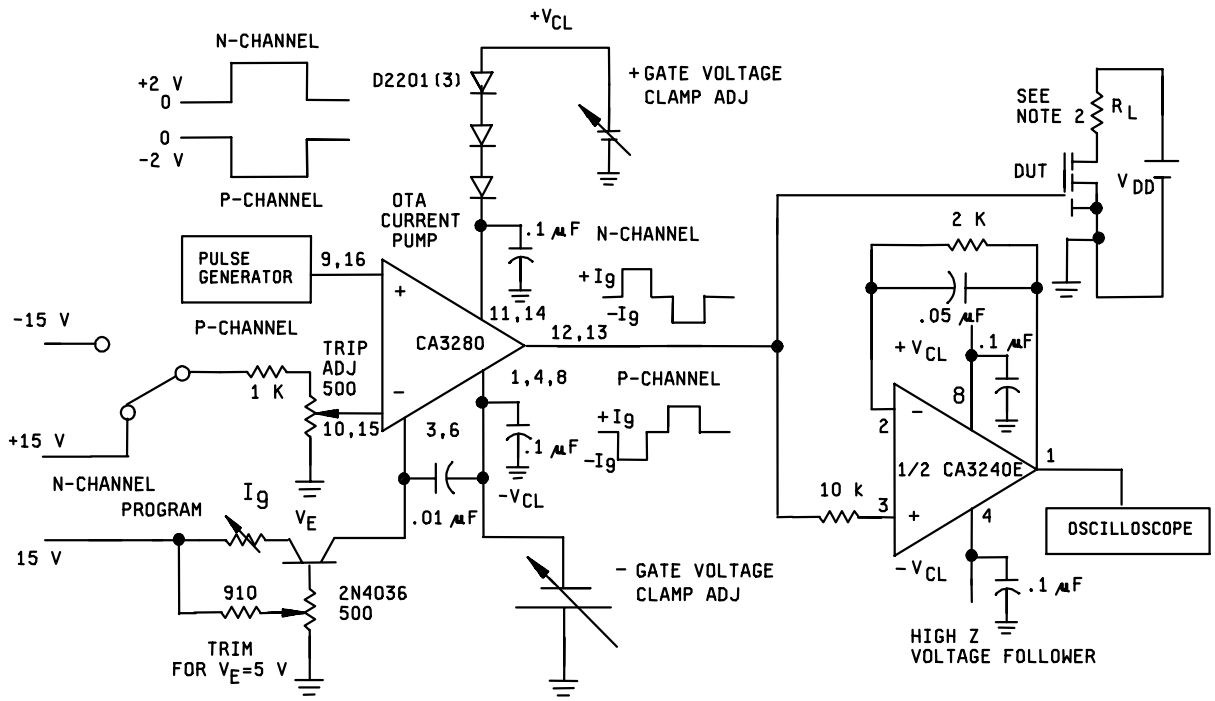

NOTES:

1. This test method provides gate voltage as a monotonic function of gate charge. Charge or capacitance may be unambiguously specified at any gate voltage. Gate voltage assuring that the device is well into the on-state will result in very reproducible measurements. For a given device, the gate charges at these voltages are independent of drain current and a weak function of the off-state voltage.
2. Condition B requires a constant current drain regulator.

FIGURE 3471-2. Practical gate charge test circuit.

Source: https://assist.dla.mil -- Downloaded: 2016-12-03T20:24Z
Check the source to verify that this is the current version before use.

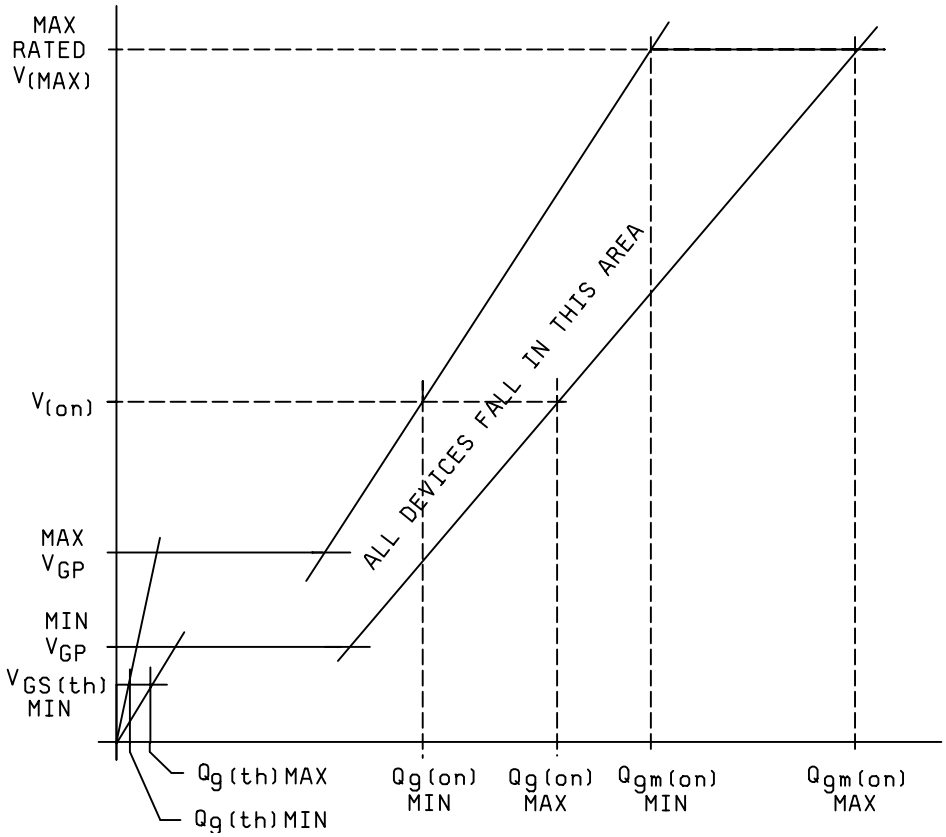

NOTES:

1. $Q_g = I_g t$.
2. V_{GP} is measured by a dc test, same I_D, $V_{DS} >> V_{GP}$ (see 3.14).
3. $V_{(max)}$ and $V_{(on)}$ are <u>specified</u> voltages for charge measurements $Q_{gm(on)}$ and $Q_{g(on)}$.
4. $V_{GS(th)}$ min is a <u>specified</u> voltage for measuring $Q_{g(th)}$.

FIGURE 3471-3. <u>Gate charge characterization showing measured characteristics</u>.

Source: https://assist.dla.mil -- Downloaded: 2016-12-03T20:24Z
Check the source to verify that this is the current version before use.

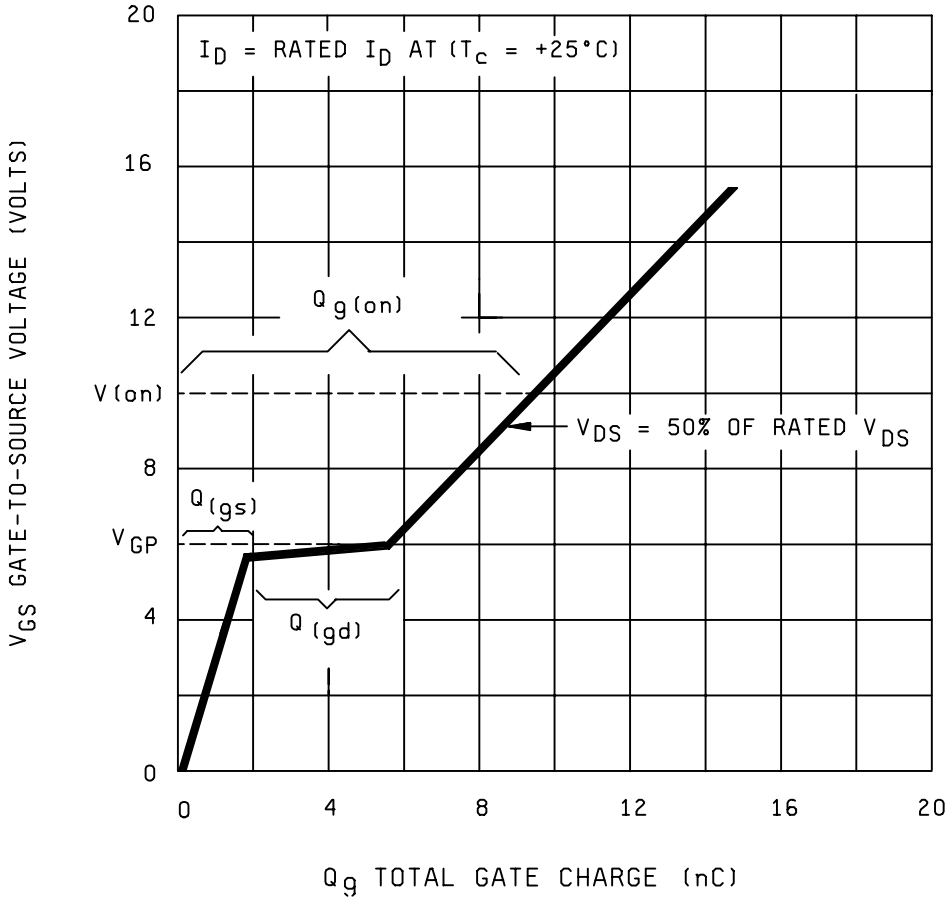

FIGURE 3471-4. Gate charge, condition B.

Source: https://assist.dla.mil -- Downloaded: 2016-12-03T20:24Z
Check the source to verify that this is the current version before use.

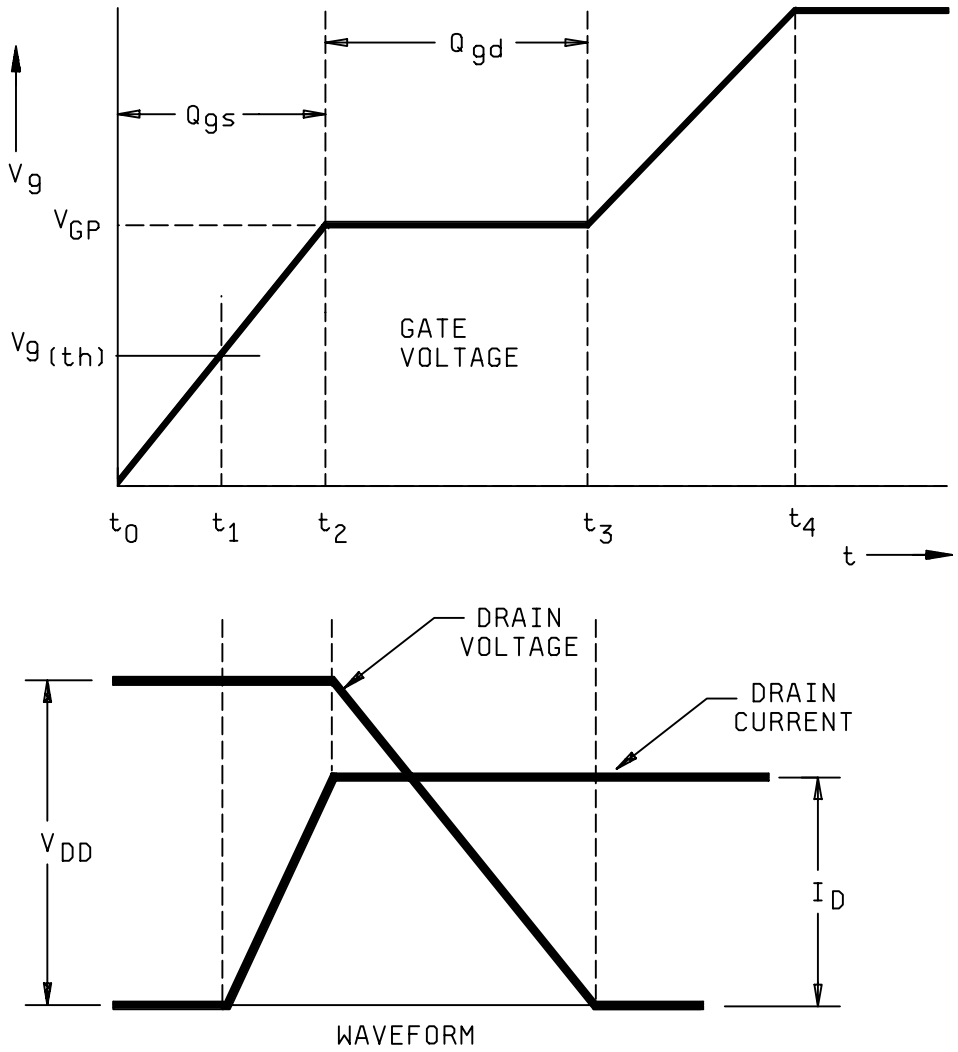

FIGURE 3471-5. Idealized gate charge waveforms, condition B.

Source: https://assist.dla.mil -- Downloaded: 2016-12-03T20:24Z
Check the source to verify that this is the current version before use.

METHOD 4066.4

SURGE CURRENT

1. Purpose. The purpose of this test method is to subject the device under test (DUT) to high current stress conditions to determine the ability of the device chip and contacts to withstand current surges. This is intended to verify a nonrepetitive surge rating where there is sufficient time between surges to permit the device temperature to return to its original value.

2. Applicability. This test method describes three different conditions: A, B, and C. Surge current is applied in the forward direction to signal diodes and rectifier diodes, and in the reverse direction to voltage regulator (zener) diodes. Condition A uses half sinusoidal forward current surges, at low duty factor, applied to either a baseline ac or dc current. Condition B uses rectangular current pulse(s) and is intended primarily for zener diodes or where otherwise applicable. When used with zener diodes, this method utilizes a monitoring circuit to sense possible voltage collapse during the current pulse. Condition C is intended for high current devices that can be applied to either condition A or condition B.

3. Definitions. The following symbols and terms shall apply for the purpose of this test method.

a. I_O: Average ac forward current (in A).

b. I_F: DC forward current (in A).

c. I_Z : DC reverse zener current (in mA).

d. I_{FSM}: Nonrepetitive peak value of forward surge current (in A).

e. I_{ZSM}: Nonrepetitive peak value of zener surge current (in mA).

f. I_{FRM} AC forward current repetitive peak.

g. V_{RSM}: Nonrepetitive peak reverse voltage (in V).

h. V_{RWM} Working peak reverse voltage (in V).

i. V_{FSM}: Peak forward surge voltage (in V).

j. V_{ZSM}: Peak zener surge voltage (in V).

k. n: Number of pulses.

l. d.f: Duty factor = 100 t_p / t_{rep}

Source: https://assist.dla.mil -- Downloaded: 2016-12-03T20:24Z
Check the source to verify that this is the current version before use.

m. t_p: Duration of current surge pulses (in ms).

n. Duty factor: Applied current surge pulses (in percent).

o. V_Z(min): Specified minimum zener voltage.

4. Condition A, sinusoidal current surge.

4.1 Apparatus. (As required).

4.2 Procedure. The continuously-applied electrical conditions shall be specified and applied to the device under the specified conditions. Unless otherwise specified, the specified number of current pulses (n) shall be superimposed on the continuously- applied electrical conditions at the specified duty factor in accordance with figure 4066-1 (condition A1) for rectifiers, or figure 4066-2, (condition A2) for signal and switching diodes, zeners or bridges, as applicable. The surge pulses shall be half-sine waveform and of specified duration (t_p). The duty factor shall be so chosen that the junction temperature is not changed significantly. The “continuously-applied electrical conditions,” shall be satisfied if the time of applied current permits the junction temperature rise to be within 10 percent of its final equilibrium value above ambient before each surge or if an additional temperature or surge current is applied beyond that specified to provide equivalent junction temperature heating during surge without the continuous applied electrical conditions. Also reference condition C for the external heating method.

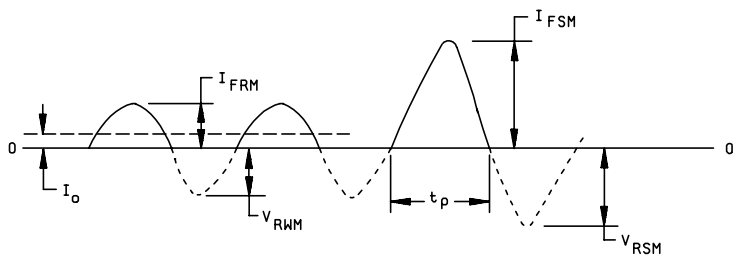

NOTE: Surge current pulse (tp) does not require synchronization with applied baseline ac.

FIGURE 4066-1. Surge pulse applied to continuous halfwave conditions (condition A1).

Source: https://assist.dla.mil -- Downloaded: 2016-12-03T20:24Z
Check the source to verify that this is the current version before use.

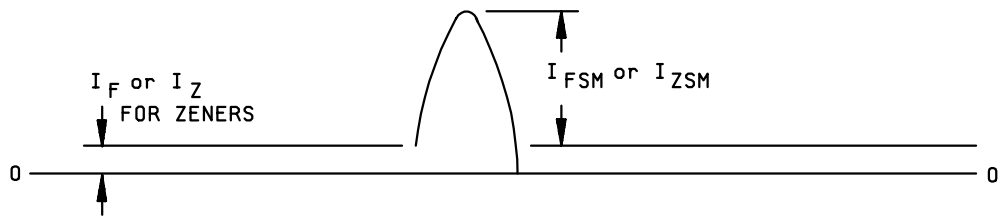

FIGURE 4066-2. Surge pulse applied to continuous dc conditions (condition A2).

4.3 Test conditions to be specified and recorded. The following conditions shall be specified in the specification:

a. Average forward current (I_O); or dc forward current (I_F) for rectifiers; or zener current (I_Z)for zener diodes; as applicable.

b. Number of current pulses (n).

c. Duration of pulses (t_p), normally 8.3 milliseconds.

d. Duty factor of pulses, normally less than ~~one~~ .1 percent, or the period normally between ~~6~~ 8 and 60 seconds.

e. Peak value of forward surge current pulse, IFSM for rectifiers, or IZSM for zeners.

f. Nonrepetitive maximum reverse voltage (V_{RSM}), when applicable.

g. Measurements after test.

h. Case, lead, or ambient temperature (T_C, T_L, or T_A), as applicable.

Source: https://assist.dla.mil -- Downloaded: 2016-12-03T20:24Z
Check the source to verify that this is the current version before use.

5. Condition B, rectangular current pulse.

5.1 Apparatus. The current source (I) and switch (SW1) combination shown on figure 4066-3 shall be able to apply the peak value of current pulse I_{FSM}or I_Z for the pulse duration (t_p) as required, and shall be able to handle any number of pulses (n) and duty cycle as required in the detail specification. The rise and fall times of the pulse shall be less than 10 percent of the pulse duration. For zeners, the dashed lines replace the solid connecting lines (vertical) to the DUT. The monitor shall sense V_{ZSM} voltage at the end of the pulse duration before the pulse is removed via gated switch (SW2) to ensure zener voltage has not collapsed below rated $V_{Z(min)}$

5.2 Procedure. As shown on figure 4066-4, no current is applied to the DUT prior to the starting time (t_o) of the test. For zeners, a maximum of 5 percent of rated I_Z may be used for baseline current flow. At t_o, SW1 causes the application of I_{FSM} or I_{ZSM} for time period t_p, after which SW1 causes the current to cease flowing in the DUT. For multiple pulse requirements, SW1 again causes current flow in the DUT after being off for a time necessary to meet the duty factor requirements; this process is repeated for n times as specified. The duty factor and pulse width (t_p) shall be chosen to ensure that the DUT average junction temperature is not changed significantly. For zeners, V_Z monitoring is mandatory. NOTE: If an excessive duty factor is applied where average junction temperature rises with each successive surge, the surge is considered repetitive and must be derated.

5.3 Test conditions to be specified and recorded. The following conditions shall be specified in the specification:

a. The peak surge current (I_{FSM}) for rectifiers or I_{ZSM} for zeners. For rectifiers, this is normally the equivalent rms current as the rated half sine condition. Zeners normally are specified with square wave value of surge current.

b. Number of current pulses (n), shall be five unless otherwise specified.

c. Duration of pulses (t_p), shall be 8.3 ms unless otherwise specified.

d. Duty factor of pulses, normally less than 0.1 percent.

e. V_{ZSM} to be monitored during I_{ZSM} for zeners. A collapse below V_Z (min) is a failure.

f. Measurements after test (see 6.1).

g. Case, lead, or ambient temperature (T_C, T_L, or T_A), as applicable.

5.4 Alternative to measurements after test *. For rectifiers, there is a minor modification to the test method that offers the advantage of immediately determining if the DUT survived the test. This consists of monitoring the forward voltage (V_{FSM}) during t_p to determine if device degradation, open-circuit or short-circuit conditions occur. A recorded value of V_{FSM} can be compared to minimum and maximum values in the detail specification to determine if the device survived the test. NOTE: Zener monitoring is mandatory; it is not an alternative. Collapse below $V_{Z(min)}$ is a failure.

Source: https://assist.dla.mil -- Downloaded: 2016-12-03T20:24Z
Check the source to verify that this is the current version before use.

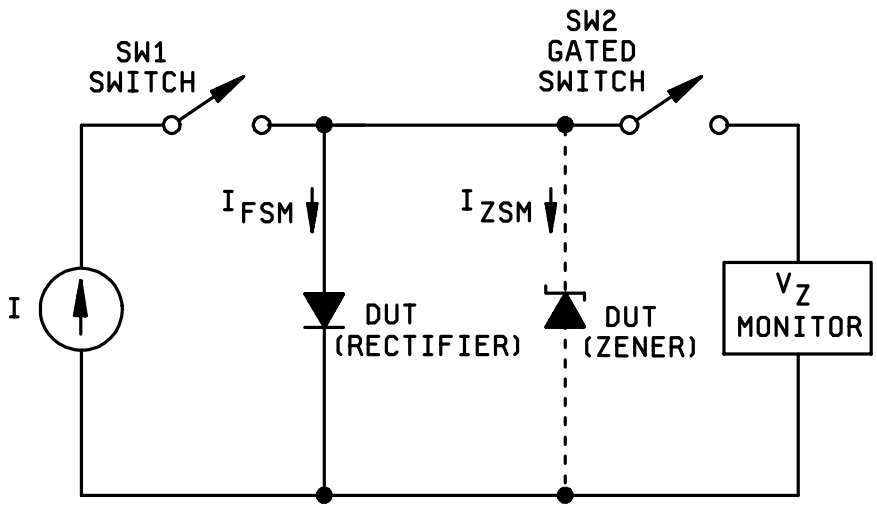

FIGURE 4066-3. Rectangular current pulse test setup.

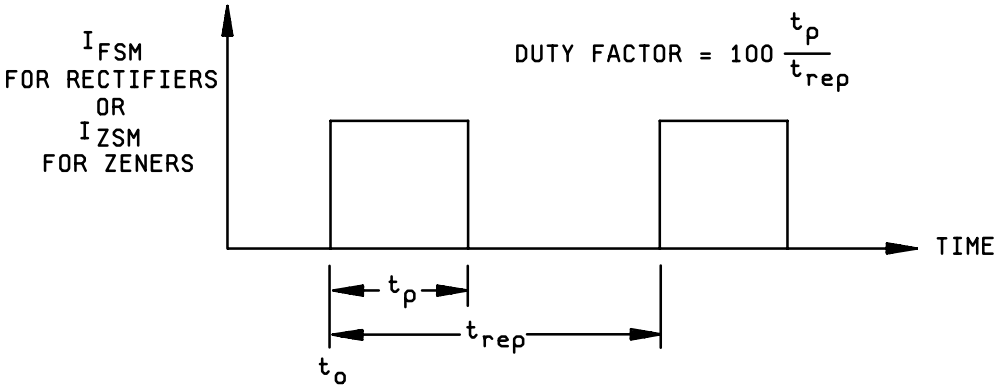

FIGURE 4066-4. Rectangular current pulse waveforms.

Source: https://assist.dla.mil -- Downloaded: 2016-12-03T20:24Z
Check the source to verify that this is the current version before use.

6. Condition C (external heating). The worst case test condition for surge current is for device junction temperature at the rated maximum allowable junction temperature. Test condition A approximates this condition by applying forward current to dissipate power in the DUT. The product of this power dissipation and the device thermal resistance produces a temperature rise of the junction over the case temperature at which the surge test is performed. This represents what actually happens to a device in use. However, the actual junction temperature during the surge current test is only at the rated allowable maximum for those individual devices which have both the worst case maximum forward voltage drop and the worst case maximum thermal resistance. Only a very small percentage of actual devices will truly be worst case. The vast majority of devices will be tested at junction temperatures below rated maximum.

Test condition C avoids this short fall in junction temperature and truly represents worst case operation by externally heating the DUT to the specified rated maximum operating junction temperature of the DUT. Consequently, there is no applied heating current prior to or concurrent with the surge current. Once the DUT has stabilized at thermal equilibrium at the specified maximum operating junction temperature, the desired surge current pulses are applied at the specified duty factor. The time between current surges must be long enough to permit the device junction temperature to return to its original thermal equilibrium.

6.1 Test conditions to be specified and recorded. The following conditions shall be specified in the specification:

a. All conditions defined by the specified test condition in 4.3 or 5.3

b. External heating temperature, T_A.

7. Summary. The following conditions shall be specified in the individual specification:

a. Test condition letter.

b. Case temperature, T_C.

c. Average forward current, I_O, or dc forward current, I_F for rectifiers, or dc zener current I_Z; as applicable for baseline current.

d. Number of current pulses (see 4.3).

e. Duration of pulses (see 4.3).

f. Duty factor of pulses (or time required between pulses).

g. Peak value of forward surge current for rectifiers or I_{ZSM} for zeners.

h. Maximum reverse voltage (non-repetitive), V_{RSM}. (V_{RSM} = 0 for conditions A2 and C.)

i. Measurements after test.

j. Case, lead, or ambient temperature (T_C, T_L, or T_A), as applicable.

Source: https://assist.dla.mil -- Downloaded: 2016-12-03T20:24Z
Check the source to verify that this is the current version before use.